General Specifications

ADMAG TI Series
AXG Magnetic Flowmeter

GS 01E22A01-01EN

■ GENERAL DESCRIPTION

The ADMAG TI (Total Insight) series AXG magnetic flowmeter is a high-quality and highly reliable product developed based on years of experience and achievement, such as enhancement of application by our proprietary dual frequency excitation method.

The AXG magnetic flowmeter is ideal for industrial process lines like oil & gas, chemical, pulp & paper, food & beverage, or metal & mining applications. With outstanding reliability and ease of operation and maintenance, developed on decades of field-proven experience, the AXG will increase user benefits while reducing total cost of ownership.

- *Size: 2.5 to 500 mm (0.1 to 20 in.)*
- *Lining: Fluorocarbon PFA, Ceramics tube*
- *Process connection: ASME, EN, AS, and JIS*

Note: For AXG1A remote transmitter, read general specifications (GS 01E22C01-01EN).
For AXFA11G remote transmitter, read general specifications (GS 01E20C01-01E).

Integral Flowmeter

Remote Transmitter

Remote Sensor

■ FEATURES

●Stable Measurement

Our own dual frequency excitation method realizes stable flow measurement even under high flow noise in the fluid with highly concentrated slurry.

●Multiple Inputs and Outputs

Maximum four inputs/outputs of current, pulse, and status signals can be selected. Mass or calorie calculation using temperature input is available.

●Improved Operation and Monitoring Function

Operation authority level setting for ensuring safety, process data trend display, display backlight flashing (Squawk) function, and data store / restore function with display unit internal memory or microSD card are available.

●Improved Maintainability

Diagnostic functions that contribute to preventive maintenance of the plant are installed. Diagnosis of the device (verification function) that can be executed without demounting from piping, detection of the process condition by monitoring the flow noise and electric conductivity of the fluid, electrode insulation deterioration diagnosis, electrode adhesion diagnosis, and wiring connection diagnosis are available.

●Compliance with IEC61508 (optional specification)

This product can be used in safety instrumented systems up to SIL2 in simplex configuration and SIL3 in redundant configuration.

●Communication Protocol

HART, BRAIN, Modbus, FOUNDATION Fieldbus, PROFIBUS PA, EtherNet/IP

Refer to GS 01E21F02-01EN for FOUNDATION Fieldbus communication type
Refer to GS 01E21F02-02EN for EtherNet/IP Communication Type
Refer to GS 01E21F02-03EN for PROFIBUS PA communication type
Refer to GS 01E22A11-03EN for pulp & paper application type
Refer to GS 01E22A21-04EN for marine approval type

YOKOGAWA

Yokogawa Electric Corporation
2-9-32, Nakacho, Musashino-shi, Tokyo, 180-8750 Japan
Tel.: +81-422-52-4443 Fax.: +81-422-52-2018

GS 01E22A01-01EN
© Copyright Apr. 2017 (KP)
26th Edition May 30, 2025 (KP)

■ GENERAL

Measuring Principle:

By applying the occurrence of electromotive force proportional to the flow velocity when fluid moves in the magnetic field, the flowmeter can measure the flow velocity of conductive liquid. It calculates the instantaneous flow rate, integrated flow rate, etc. from the measured flow velocity.

System Configuration:

Basic configuration: Sensor, Transmitter, Cable

	Function
Sensor	Detects the flow velocity
Transmitter	Amplifies a sensor and converts signals.
Cable (*)	Signal cable (for flow signal), excitation cable (for coil excitation)

* : Necessary for Remote type with construction separated to a sensor and a transmitter.
The excitation cable is to be supplied by customer except for Submersible-Use.

Main Element of Sensor:

	Function
Wetted Part	Lining (*1), Electrodes, Grounding Devices (*2), Adapters for hygienic.
Non-wetted Part	Flanges, Housing, Excitation coil, Measuring pipe (excluding ceramics tube)

*1: including ceramics tube.
*2: grounding ring plate, metal hat grounding ring, grounding ring for wafer type replacement model grounding ring electrode, built-in grounding electrode
Note: Grounding devices are for taking the reference electric potential from the process fluid in measuring the electromotive force, and are fixed (or built-in) at two locations, upstream and downstream of the flow. They are unnecessary when the reference potential is taken from installed piping. For details of grounding, read "Cautions on Selection and Installation".

Main Element of Transmitter:

Display unit, Setting keys, Amplifier unit (including I/Os and power supply unit)

■ CONSTRUCTION

Use:

Use	Specification
General-purpose	Non explosion protection for the use in non-hazardous area. Applicable to Integral Flowmeter, Remote Sensor, or Remote Transmitter. IP Protection Grade: IP66/IP67, Type 4X (CSA)
Submersible	Temporary submersion is possible. Applicable to Remote Sensor only. Note: Urethane resin potting is applied in the terminal box of a remote sensor. Signal and excitation cables (when optional code L### is not selected, cable length is each 30 m) are pre-wired and waterproof glands with union joints are attached at factory. Performance: Conforms to continuous immersion under the following test condition. Test Condition: 1 month with fresh water and 50 m under the water surface (hydraulic pressure 0.5 MPa). However, adverse conditions such as sewage and seawater are excluded. Protect the cable by appropriate means, such as protected separately with conduit piping. IP Protection Grade: IP68
Explosion Protection	Explosion protection for the use in hazardous area. Applicable to Integral Flowmeter, Remote Sensor, or Remote Transmitter. IP Protection Grade: Read "Explosion Protection".
Hygienic	Equipped with piping adapters following hygienic standards. Applicable to Integral Flowmeter, or Remote Sensor. IP Protection Grade: IP66/IP67, Type 4X (CSA)
Hygienic with Explosion Protection	Equipped with piping adapters following hygienic standards. Explosion protection for the use in hazardous area. Applicable to Integral Flowmeter, or Remote Sensor. (Except optional code 3A.) IP Protection Grade: Read "Explosion Protection".
Blow line	These specifications are for pulp & paper application type. For details, please refer to GS 01E22A11-03EN.
Circulation/ extraction line	

All Rights Reserved. Copyright © 2017, Yokogawa Electric Corporation

Construction:

Two types of Integral and Remote type.

Type	Construction
Integral type	Integrated structure of a sensor and a transmitter.
Remote type	Separated structure of a sensor and a transmitter, which are connected by a signal cable and an excitation cable (*).

* : To be supplied by customer except for Submersible-Use.

Combinable Transmitter:

Remote Sensor Size	Remote Transmitter
2.5 to 400 mm (0.1 to 16 in.)	AXG4A, AXG1A, AXFA11G
500 mm (20 in.)	AXG1A, AXFA11G

Note 1: When changing the combined transmitter, readjustment of the meter factor by actual flow calibration is necessary to ensure accuracy.
Note 2: For AXG1A remote transmitter, read general specifications (GS 01E22C01-01EN).
For AXFA11G remote transmitter, read general specifications (GS 01E20C01-01E).
Note 3: When combining explosion protection AXG remote sensor with general-purpose AXG4A remote transmitter, low conductivity detection may not perform properly.
Note 4: When selecting the optional code E21 for the AXG4A remote transmitter, unify either general-purpose or explosion protection for both of the AXG remote sensor and the AXG 4A remote transmitter.
Note 5: The remote sensor for Japan Flameproof can be connected only with a remote transmitter authorized by Yokogawa Electric Corporation.

Maximum Cable Length:
100 m (328 ft) for AXG4A remote transmitter
200 m (656 ft) for AXG1A and AXFA11G remote transmitter
5 m (16 ft) when using with Marine Approval Type

Process Connection:

Wafer, flange, union joint (screw type, welding type), clamp, union, and welded joint type are available.
For the availability of lining and size range, read "MODEL AND SUFFIX CODE".

Type	Process connection
Wafer	ASME Class 150, Class 300 EN PN10, PN16, PN40 JIS F12, 10K, 20K JPI Class 150
Flange	ASME Class 150, Class 300, Class 600 EN PN10, PN16, PN25, PN40 AS Table D, Table E JIS F12, 10K, 20K JPI Class 150
Union Joint	Screw Type: 1/4 NPT (size 2.5 to 5 mm / 0.1 to 0.2 in.) 3/8 NPT (size 10 mm / 0.4 in.) R 1/4 (size 2.5 to 5 mm / 0.1 to 0.2 in.) R 3/8 (size 10 mm / 0.4 in.) Welding Type: Outer Diameter of Welding Union Joint: 18.5 mm / 0.73 in. (size 2.5 to 5 mm / 0.1 to 0.2 in.) 22.5 mm / 0.89 in. (size 10 mm / 0.4 in.)
Clamp	Tri-Clamp DIN 32676 Clamp ISO 2852 / SMS 3016 Clamp ISO 2852 Clamp (for JIS G3447 Piping)
Union	DIN 11851 Union ISO 2853 Union SMS 1145 Union (Open groove packing type) ISO 2853 Union (for JIS G3447 Piping)
Butt Weld Joint	DIN 11850 Piping Butt Weld Joint ISO 2037 Piping Butt Weld Joint JIS G3447 Piping Butt Weld Joint

Electrode Construction:

PFA Lining	External insertion type or internal insertion type (*)
Ceramics Tube	Electrode integrally sintered type (Platinum- Alumina Cermet)

* : Internal insertion type is for models with Hygienic or Hygienic Explosion Protection, size 500 mm (20 in.), or ASME Class 600 flange high pressure type.

Grounding Device Construction:

Grounding Ring Plate	Ring flat plate with mounting bracket
Metal Hat Grounding Ring	Grounding ring with hat shape, with mounting bracket
Grounding Ring For Wafer Type Replacement Model	Ring-shaped short pipe grounding ring, with mounting bracket
Grounding Ring Electrode	Electrode is inserted into ring-shaped short pipe with PFA lining, with mounting bracket
Built-in Grounding Electrode	Electrode is inserted on the inner surface of the measuring pipe

Wetted Part:

Wetted Part	Material
Lining	Fluorocarbon PFA, Ceramics (*) * : Alumina ceramics (99.8%)

All Rights Reserved. Copyright © 2017, Yokogawa Electric Corporation

Wetted Part	Material
Electrode	Stainless steel 316L, Nickel alloy (*), Platinum- Iridium, Tantalum, Titanium, Tungsten carbide, Platinum-Alumina cermet * : ASTM B574 UNS N10276 or ASME SB-574 UNS N10276
Grounding Device	Grounding Ring Plate Stainless steel 316L, Nickel alloy (*), Titanium * : ASTM B575 UNS N10276 or ASME SB-575 UNS N10276 Metal Hat Grounding Ring Stainless steel 316L Grounding Ring For Wafer Type Replacement Model Stainless steel F316L Grounding Ring Electrode Platinum-Iridium, Tantalum Built-in Grounding Electrode Platinum-Iridium, Tantalum
Gasket (Note)	PFA Lining • General-purpose, Submersible, and Explosion Protection (excluding ASME Class 600 flange high pressure type) Standard: None (not necessary) Optional (for plastic piping): GA: Fluororubber GC: Acid-resistant fluororubber GD: Alkali-resistant fluororubber • ASME Class 600 flange high pressure type Standard: Fluororubber (FKM) (O-ring) • Hygienic, and Hygienic Explosion Protection Gasket A: (See the figure below) Standard: Ethylene propylene diene rubber (EPDM) Optional: GH: Silicone rubber 3A: Ethylene propylene diene rubber(EPDM) Gasket B: (see the figure below) Optional: W2: Size 15 to 100 mm / 0.5 to 4 in.: Ethylene propylene diene rubber (EPDM) Size 125 mm (5 in.): Silicone rubber W2 and GH: Silicone rubber 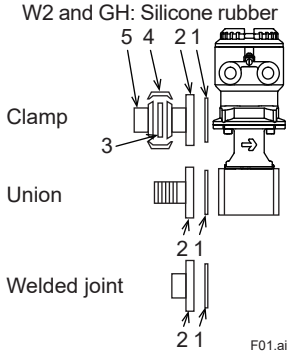 1: Gasket A 2: Adapter When selecting optional code W2 3: Gasket B 4: Clamp 5: Ferrule Ceramics Tube Standard: Fluororesin with ceramic fillers (Valqua #7020) Optional (for plastic piping): GA: Fluororubber GC: Acid-resistant fluororubber GD: Alkali-resistant fluororubber Optional (for metal piping): GF: Fluororesin with alkali-resistant carbons

Wetted Part	Material
Gasket (Note)	Installed Pipe Standard: None (supplied by customer) Optional (for wafer type, with bolts, nuts, and gaskets): BSC: Chloroprene rubber (CR) BSF: PTFE-sheathed non-asbestos joint sheet
Adapters for Hygienic	Process Connection (Clamp): HJA: Stainless steel F304 Optional W2 (Hygienic Connection Parts): Clamp: Stainless steel SCS13 (*1) Ferrule: Size 15 mm (0.5 in.): Stainless steel 316L Size 25 to 125 mm (1 to 5 in.): Stainless steel 304 HJB: Stainless steel F316L Optional W2 (Hygienic Connection Parts): Clamp: Stainless steel SCS13 (*1) Ferrule: Stainless steel 316L HAB, HDB, HKB: Stainless steel F316L Process Connection (Union): JJA: Stainless steel F304 JJB: Stainless steel F316L JDB, JKB, JSB: Stainless steel F316L Process Connection (Butt Weld Joint): KJA: Stainless steel F304 KJB, KDB, KKB: Stainless steel F316L *1: JIS standard casting material
Union Joint for Ceramics Tube	Screw Union Joint: GUN, GUR: Stainless steel F316L Welding Union Joint: GUW: Stainless steel F316L Note: Contact YOKOGAWA office if plastic union joint is required.

Note: The description is about the material of gaskets supplied with flowmeter, to be used between the sensor pipe and grounding ring or the process flange. This includes whether gaskets are necessary, or whether gaskets should be supplied by customer. For details of gaskets, read "Cautions on Selection and Installation" and "Optional Code".

Non-wetted Part Material:

Sensor Terminal Box:
Low copper aluminum alloy EN AC-43400
Transmitter Housing:
Low copper aluminum alloy EN AC-43400
Sensor Housing:

Size	Material
2.5 to 15 mm (0.1 to 0.5 in.)	Stainless steel SCS11 (*1)
25 to 125 mm (1 to 5 in.)	Stainless steel 304
150 to 500 mm (6 to 20 in.)	Carbon steel SPCC (*2) or its equivalent

*1: JIS standard casting material
*2: JIS standard or JIS standard-based material

Mini-flange (subject to pressure in wafer type):
PFA Lining

Size	Material
150 to 200 mm (6 to 8 in.)	Carbon steel A105 (*3)

Note: In the wafer type other than the above, there is no mini flange because the measuring pipe and the connecting part have a one-piece casting structure.

All Rights Reserved. Copyright © 2017, Yokogawa Electric Corporation

Flange:

Process Connection Code	Material
B##	Stainless steel F304
D##	
E##	
P##	Stainless steel F316
C##	Carbon steel A105 (*3)

*3: ASTM standard forged material

Measuring Pipe:

- PFA Lining

General-purpose, Submersible, and Explosion Protection (excluding ASME Class 600 flange high pressure type):

Size	Material
2.5 to 15 mm (0.1 to 0.5 in.)	Stainless steel SCS13 (*4)
25 to 125 mm (1 to 5 in.)	Stainless steel CF8 (*5)
150 to 500 mm (6 to 20 in.)	Stainless steel 304

ASME Class 600 flange high pressure type

Size	Material
25 to 100 mm (1 to 4 in.)	Stainless steel 304

Hygienic and Hygienic Explosion Protection

Size	Material
15 to 25 mm (0.5 to 1 in.)	Stainless steel SCS13 (*4)
32 to 125 mm (1.25 to 5 in.)	Stainless steel CF8 (*5)

*4: JIS standard casting material
*5: ASME standard casting material
Note: Read "Lining Material" for ceramics tube, which is a wetted part material.

- Ceramics Tube
  For the ceramics tube which is also a wetted part, read “Lining” in “Wetted part”.

Coating:

General-purpose, and Explosion Protection (Integral Flowmeter, Remote Sensor and Transmitter):

Standard Coating:

Coated Part	Coating Specification
Sensor housing	Polyurethane resin solvent coating, or no coating (*1)
Sensor flanges (for flange type)	
Sensor terminal box (for remote type, incl. cover)	Polyester resin powder coating
Transmitter housing (incl. cover)	

Rugged Coating (*2):

Coated Part	Coating Specification
Sensor housing	Expoxy and polyurethane resin solvent coating, or no coating (*1)
Sensor flanges (for flange type)	
Sensor terminal box (for remote type, incl. cover)	Epoxy and polyurethane resin solvent coating
Transmitter housing (incl. cover)	

Submersible (Remote Sensor):

Standard Coating:

Coated Part	Coating Specification
Sensor housing	Non-tar epoxy resin solvent coating
Sensor flanges	
Sensor terminal box (incl. cover)	

Hygienic, and Hygienic with Explosion Protection (Integral Flowmeter, and Remote Sensor):

Standard Coating:

Coated Part	Coating Specification
Sensor housing	No coating
Adapter for piping	
Sensor terminal box (for remote type, incl. cover)	Polyester resin powder coating
Transmitter housing (incl. cover)	

*1: No coating for General-purpose and Explosion Protection with stainless steel flanges in sizes 2.5 to 125 mm (0.1 to 5 in.). Coating is done to sizes 150 mm (6 in.) and more, or to carbon steel flanges.
*2: Rugged coating is for applications which need salt tolerance resistance, alkali resistance, acid resistance, and/or weather resistance. Epoxy resin undercoating twice and polyurethane resin overcoating once are performed to the same area as standard coating.

Coating Color:

General-purpose, Explosion Protection, Hygienic, and Hygienic Explosion Protection:
Mint green (Munsell 5.6BG3.3/2.9 equivalent)
Submersible:
Black

Cable Entry:

JIS G1/2 female

ASME 1/2 NPT female

ISO M20 x 1.5 female

Cable Entry Direction:
For Integral Flowmeter and Remote Sensor, the cable entry direction can be specified from +90, +180, or -90 degree rotation when optional code RH is ordering, and also can be changed by customer after delivery. However, it can not be changed after delivery when submersible-use or optional code DHC (district heating and cooling / condensation proof use) is selected.

Wiring Terminal:

Intra-system Connection Part (*1):
M4 Screw type
Extra-system Connection Part (*2):
M4 Screw or Clamp type
*1: Connections between Remote Sensor and Remote Transmitter for flow signal and excitation current.
*2: Connections at Integral Flowmeter and Remote Transmitter for input/output signals and power supply.

Mounting:

Remote Transmitter: 2-inch pipe mounting

Grounding:

Grounding Resistance: 10 Ω or less
Note: When the built-in lightning protector as standard is not required, grounding resistance 100 Ω or less can be applied.
For grounding of explosion protection, appropriate construction is required according to the regulations of each country.

All Rights Reserved. Copyright © 2017, Yokogawa Electric Corporation

■ FUNCTIONS

Note: For AXG1A remote transmitter, read general specifications (GS 01E22C01-01EN).
For AXFA11G remote transmitter, read general specifications (GS 01E20C01-01E).

Display and Setting:

Display unit (3 infrared switches with LCD) enables the user to set the parameters without opening the display cover.

Note: Parameter setting by setting tool such as HHT (handheld terminal) and FieldMate (device adjustment / management software) is also possible.

Display:

Full dot matrix LCD, 64 × 128 dots, with backlight, dot reversal display available

Display Language (*):

Display Code 1:

English, French, German, Italian, Spanish, Portuguese, Russian and Japanese. The display languages are selectable and can be changed by customer.

Display Code 2:

English and Chinese. The display languages are selectable and can be changed by customer.

Display Code 3:

English.

* : The setting is English when shipped from factory.

Display Screen Configuration:

Display Screen Item:

Status display (icon), Time (necessary to set the time at power-on), Data display (max. four lines), Infrared switch operation status

Flow Rate Screen:

Measured Data Screen or Online Trend Screen is available. Update period selectable from 0.2, 0.4, 1, 2, 4, and 8 seconds.

Measured Data Screen:

Display up to 4 data points simultaneously with numbers, bar graphs, icons, or character strings. Specify up to 8 points of data and change display data with infrared switches or automatic scroll function (scroll period 2, 4, or 8 seconds).

Selectable Data in Measured Data Screen:

BRAIN, HART, Modbus, EtherNet/IP

Flow rate (%), Flow velocity, Volume flow rate, Mass flow rate, Calorie, Totalizer 1, Totalizer 2, Totalizer 3, Adhesion level, Current output 1, Current output 2, Flow noise level, Tag No., Communication protocol, Totalizer 1 count, Totalizer 2 count, Totalizer 3 count, Modbus info

Note: Calorie is available for Input/Output signal type H, J, or K.
Current output 2 is available for Input/Output signal type B, C, or H.
Modbus info is available for Modbus communication type.

FOUNDATION Fieldbus

Flow rate (%), Flow velocity, Volume flow rate, Mass flow rate, Calorie, Totalizer 1, Totalizer 2, Adhesion level, Flow noise level, PDtag, Communication protocol, Total 1 count, Total 2 count, AI1 Flow rate, AI1 Flow rate (%), AI1.OUT, AI2.OUT, AI3.OUT, AI4.OUT, IT1.OUT, IT2.OUT, AR.OUT

PROFIBUS PA

Flow rate (%), Flow velocity, Volume flow rate, Mass flow rate, Calorie, Totalizer 1, Totalizer 2, Totalizer 3, Adhesion level, Flow noise level, Tag number, Communication protocol, Total 1 count, Total 2 count, Total 3 count, AI1.OUT, AI2.OUT, TOT1.OUT, TOT2.OUT, TOT3.OUT

Online Trend Screen:

Display one data as trend graph. The display data can be changed with infrared switches or automatic scroll function (scroll period 2, 4, or 8 seconds) selecting up to four data.

Selectable Data in Online Trend Screen:

Flow rate (%), Flow velocity, Volume flow rate, Mass flow rate, Calorie, Totalizer 1, Totalizer 2, Totalizer 3, Current output 1, Current output 2

Note: Calorie is available for Input/Output signal type H, J, or K.
Current output 2 is available for Input/Output type B, C, or H.
Totalizer 3, Current output 1 and Current output 2 are not available for FOUNDATION Fieldbus or PROFIBUS PA.

Alarm Screen:

When an alarm occurs, the flow rate screen and the alarm screen are alternately displayed in the cycle (2, 4, or 8 seconds) linked with the flow rate screen update cycle. Select simple screen (single line display) or detail screen (with alarm countermeasure display).

NAMUR NE 107 Alarm Display Function:

Based on NAMUR NE 107, alarms are classified and displayed as follows. It can also be set to hide.

F: Failure
C: Function Check
S: Out of Specification
M: Maintenance Required

Offline Trend Screen (when optional code MC (microSD card) is selected):

Data stored by the data logging function can be displayed on the trend screen. The selectable data is the same as that for the Online Trend Screen.

Display Backlight Flashing (Squawk) Function:

Display backlight can be set to flash once or continuously at 4-second cycle to identify the device.

Display Operation Authority:

Display operation authority level against the parameters can be controlled by selecting from operator, maintenance, or specialist by passcode.

Operator:

Only parameters related to display setting can be set.

Maintenance:

Only parameters related to display setting and zero adjustment can be set.

Specialist:

All parameters can be set.

All Rights Reserved. Copyright © 2017, Yokogawa Electric Corporation

Communication Function:

BRAIN:
- Communication Signal:
  - Superimposed on the Current Output 1
- Communication Line Condition:
  - Load Resistance:
    - 250 to 450 Ω (including cable resistance)
  - Load Capacitance: 0.22 μF or less
  - Load Inductance: 3.3 mH or less
  - Input Impedance of Communicating Device:
    - 10 kΩ or more (at 2.4 kHz)
  - Communication Distance:
    - Up to 1.5 km (0.93 miles), when polyethylene insulated PVC-sheathed cables (CEV cables) are used. Communication distance varies depending on the type of cable and wiring used.
  - Distance from Power Line:
    - 15 cm (6 in.) or more. (Parallel wiring should be avoided)

HART:
- Protocol Version: HART 7
- Communication Signal:
  - Superimposed on the Current Output 1
- Communication Line Condition:
  - Load Resistance:
    - 230 to 600 Ω (including cable resistance)

Modbus:
- Communication protocol:
  - 2-wire half duplex RS-485 Modbus
- Flow control: None
- Baud rate [bps]: 1200, 2400, 4800, 9600, 19200*, 38400, 57600, 115200
- Start bit: 1 bit (Fixed)
- Stop bit: 1 bit*, 2 bits
- Parity bit: Odd, Even*, None
- Transfer mode:
  - RTU (Remote Terminal Unit)
  - ASCII
    - Data length: 8 bits
    - LSB (Least Significant Bit sent first)
- Slave address: 1* to 247
- Support function: See IM 01E21A02-05EN (Modbus communication type).
- Bus termination:
  - Standard RS-485 bus termination
  - ON (bus end), OFF* (not bus end)
  - *: Factory default setting
- Modbus cable
  - 3-Wire cable (twisted pair (D0, D1) and Common) with shield should be used. Wire gauge should be AWG24 or wider.
  - The characteristic impedance of the cable higher than 100ohm may be preferred.
- Line Termination
  - Modbus cable requires Line Termination at each of the two ends of the bus to minimize the reflections. For details, please refer to "Modbus over serial line specification and implementation guide V1.02".

FOUNDATION Fieldbus:
- Output Signal:
  - Fieldbus communication signal conforming to the standard specifications (H1) of FOUNDATION Fieldbus.
- Communication Requirements:
  - Supply Voltage: 9 to 32 V DC
  - Current Draw: 15 mA (maximum)
- For details, please refer IM 01E21A02-03EN.
- Note: I/O2 (Pulse/Status Output1) is intended only for the calibration use.

PROFIBUS PA:
- Output Signal:
  - Fieldbus communication signal conforming to the standard specifications of PROFIBUS PA.
- Communication Requirements:
  - Supply Voltage: 9 to 32 V DC
  - Current Draw: 15 mA (maximum)
- For details, please refer IM 01E21A02-04EN.
- Note: I/O2 (Pulse/Status Output1) is intended only for the calibration use.

EtherNet/IP:
- Output:
  - Digital communication signal based on CIP (Common Industrial Protocol), adaptor.
- Physical layer:
  - 10BASE-T / 100BASE-TX
- Transmission speed:
  - 10 / 100 Mbps with auto negotiation
- Functional Specifications:
  - Device Level Ring (DLR)
  - Cyclic data communication for flow, total and diagnostics
  - Explicit message communication for flow, total, diagnostics and write protect
  - Number of simultaneous connections (Explicit message): Maximum 6
  - Number of simultaneous connections (Cyclic): Maximum 4
- Displayed Language:
  - English
- Ethernet communication:
  - Maximum segment length: 100 m
  - Web server: Real time monitoring, configuration change and operation for ADMAG TI is available from web browser
  - DHCP client functionality
- For details, please refer IM 01E21A02-06EN.
- Note: No Pulse/Status Output is available.

All Rights Reserved. Copyright © 2017, Yokogawa Electric Corporation

Input/Output Function:

Input/Output Signal:

Input/Output up to four points can be selected from type A to K, P to T, 0, 2, 4, 6, F0, G0, P0 in the table.

Input/Output (HART, BRAIN)

Type	Input/Output Signal				Communication and I/O Code	
	I/O1 Terminal	I/O2 Terminal	I/O3 Terminal	I/O4 Terminal	BRAIN	HART 7
Type A	Current Output 1 Active	Pulse/Status Output 1 Passive	—	—	DA	JA
Type B			Pulse/Status Output 2 Passive	Current Output 2 Active	DB	JB
Type C			Status Input (No-voltage)	Current Output 2 Active	DC	JC
Type D			Status Output Passive	Pulse/Status Output 2 Passive	DD	JD
Type E			Status Input (No-voltage)	Pulse/Status Output 2 Passive	DE	JE
Type F			Status Input (No-voltage)	Pulse/Status Output 2 Active (with internal resistor)	DF	JF
Type G			Status Input (No-voltage)	Pulse/Status Output 2 Active (without internal resistor)	DG	JG
Type H			Current Output 2 Passive	Current Input Active	DH	JH
Type J			Pulse/Status Output 2 Passive	Current Input Active	DJ	JJ
Type K			Status Input (No-voltage)	Current Input Active	DK	JK

Type	Input/Output Signal				Communication and I/O Code	
	I/O1 Terminal	I/O2 Terminal	I/O3 Terminal	I/O4 Terminal	BRAIN	HART 7
Type P	Current Output 1 Passive	Pulse/Status Output 1 Passive	Current Output 2 Passive	—	DP	JP
Type Q				Pulse/Status Output 2 Passive	DQ	JQ
Type R		Pulse/Status Output 1 Passive (NAMUR)		—	DR	JR
Type S				Pulse/Status Output 2 Passive (NAMUR)	DS	JS
Type T		Pulse/Status Output 1 Passive	—	—	DT	JT

Note: "Active" means no external power supply, "Passive" means external power supply is required.

Input/Output (Modbus)

Type	Input/Output Signal						Communication and I/O Code
	I/O1 Terminal	I/O2 Terminal	I/O3 Terminal		I/O4 Terminal		
			I/O3+	I/O3-	I/O4+	I/O4-	
Type 0	—	Pulse/Status Output 1 Passive	—	Modbus C(Common)	Modbus B(D1)	Modbus A(D0)	M0
Type 2	Current Input Active						M2
Type 6	Current Output 2 Active						M6

Note: "Active" means no external power supply, "Passive" means external power supply is required.

Input/Output (FOUNDATION Fieldbus)

Type	Input/Output Signal				Communication and I/O code
	I/O1 Terminal	I/O2 Terminal	I/O3 Terminal	I/O4 Terminal	
Type F0	Fieldbus Passive	Pulse/Status Output 1 Passive * Intended only for the calibration use	—	—	F0

Input/Output (PROFIBUS PA)

Type	Input/Output Signal				Communication and I/O code
	I/O1 Terminal	I/O2 Terminal	I/O3 Terminal	I/O4 Terminal	
Type G0	Fieldbus Passive	Pulse/Status Output Passive * Intended only for the calibration use	—	—	G0

Input/Output (EtherNet/IP)

Type	Input/Output Signal		Communication and I/O code
	PORT1	PORT2	
Type P0	EtherNet/IP	EtherNet/IP	P0

All Rights Reserved. Copyright © 2017, Yokogawa Electric Corporation

Input Signal

- **Current Input (Active) (Type H, J, K, 2)**
  4 to 20 mA DC temperature signal from two-wire type transmitter.
  Internal Power Supply: 24 V DC ±20 %,
  Current Range: 2.4 to 21.6 mA
- **Status Input (Dry contact) (Type C, E, F, G, K)**
  Load Resistance:
  200 Ω or less (ON), 100 kΩ or more (OFF)

Output Signal

- **Current Output (Active) (Type A to K, 6)**
  4 to 20 mA DC signal
  Load Resistance:
  750 Ω maximum, including cable resistance
- **Current Output (Passive) (Type H)**
  4 to 20 mA DC signal
  External Power Supply: 10.5 to 32 V DC
  Load Resistance:
  911 Ω maximum, including cable resistance
- **Current Output (Passive) (Type P to T)**
  4 to 20 mA DC signal
  External Power Supply: 10.5 to 30 V DC
  Load Resistance:
  826 Ω maximum, including cable resistance
- **Pulse/Status Output (Passive) (Type A to K, P, Q, T, 0, 2, 6, F0, G0)**
  Transistor contact output (open collector)
  Contact Capacity: 30 V DC (OFF), 200 mA (ON)
  Pulse Rate:
  0.0001 to 10000 pps (pulse per second)
  Pulse Width:
  0.05, 0.1, 0.5, 1, 20, 33, 50, 100, 200, 330, 500, 1000, 2000 ms, or Duty cycle 50% (Maximum pulse width 5 minutes) configurable
  Frequency Output Range: 1 to 12500 Hz
- **Pulse/Status Output (Passive) NAMUR (Type R, S)**
  Refer to EN 60947-5-6.
- **Pulse/Status Output (Active)**
  Without Internal Resistor (Type G)
  - Driving Electronic Counter
    Load Resistance: 1 kΩ or more,
    Internal Power Supply: 24 V DC ±20 %
    Pulse Rate:
    0.0001 to 10000 pps (pulse per second)
    Pulse Width:
    0.05, 0.1, 0.5, 1, 20, 33, 50, 100, 200, 330, 500, 1000, 2000 ms, or Duty cycle 50% (Maximum pulse width 5 minutes) configurable
    Frequency Output Range: 1 to 12500 Hz
  - Driving Electromechanical Counter
    Maximum Current: 150 mA,
    Internal Power Supply: 24 VDC ±20 %
    Pulse Rate: 0.0001 to 2 pps (pulse per second)
    Pulse Width: 20, 33, 50, or 100 ms configurable

  With Internal Resistor (Type F)
  Internal resistor: 2.2 kΩ,
  Internal Power Supply: 24 VDC ±20 %
  Pulse Rate:
  0.0001 to 10000 pps (pulse per second)
  Pulse Width:
  0.05, 0.1, 0.5, 1, 20, 33, 50, 100, 200, 330, 500, 1000, 2000 ms, or Duty cycle 50% (Maximum pulse width 5 minutes) configurable
- **Digital communication (RS485 Modbus protocol) (Type 0, 2, 6)**
  2-wire half duplex RS-485 Modbus
- **Digital communication (FOUNDATION Fieldbus) (Type F0)**
  Fieldbus communication signal conforming to the standard specifications (H1) of FOUNDATION Fieldbus.
- **Digital communication (PROFIBUS PA) (Type G0)**
  Fieldbus communication signal conforming to the standard specifications of PROFIBUS PA.
- **Digital communication (EtherNet/IP) (Type P0)**
  Refer to GS 01E21F02-02EN.

Temperature Input Processing Function:

Input current signal as temperature difference or absolute temperature. It can be used for temperature check by parameter, mass flow calculation by density correction, and calorie calculation.

Flow Calculation Function:

Excitation Method:

- Dual Frequency Excitation for sizes 2.5 to 400 mm (0.1 to 16 in.)
- Pulsed DC Excitation for size 500 mm (20 in.)
  Enhanced Dual Frequency Excitation for sizes 25 to 200 mm (1 to 8 in.). Optional code HF2.

Span Setting:

Span flow can be set in units such as volume flow rate, mass flow rate, time, and flow rate value. The velocity unit can also be set.

Volume Flow Rate Unit:
kcf, cf, mcf, Mgal (US), kgal (US), gal (US), mgal (US), kbbl (US)*, bbl (US)*, mbbl (US)*, µbbl (US)*, Ml (megaliter), m^3, kl (kiloliter), l (liter), cm^3
*: "US Oil" or "US Beer" can be selected.

Mass Flow Rate Unit:
klb (US), lb (US), t (ton), kg, g

Calorie Unit:
MJ, kJ, J, kcal, cal, BTU (Specific heat setting and temperature input required)

Velocity Unit: ft, m (meter)

Time Unit: s (second), min (minute), h (hour), d (day)

Mass Flow Rate Processing:
The mass flow rate V_m is obtained in the following expression.

$V_m = V_f \times \rho$

V_m: Mass flow rate [kg/s]
V_f: Volume flow rate [m^3/s]
ρ: Density [kg/m^3]

Calorie Processing:
The calorie Q is obtained in the following expression.

$Q = c \times V_m \times \Delta t$

Q: Calorie [J/s]
C: Specific heat [J/kg•K]
V_m: Mass flow rate [kg/s]
ΔT: Temperature difference [K]

All Rights Reserved. Copyright © 2017, Yokogawa Electric Corporation

Damping Function (63% response):
Can be set for each measurement value of flow velocity, volume flow rate, mass flow rate, calorie, flow noise.
Output Damping:
For each measured value, the time constant for instantaneous value output (0.1 to 200.0 seconds, shipped with 3.0 seconds) and the time constant for totalization / pulse output (0.0 to 200.0 seconds, shipped with 3.0 seconds) can be individually set. In the case of piston pump etc., it is possible to measure pulsatile flow up to 1 Hz with output damping 0.1 seconds. However, note that decreasing damping time generally increases output fluctuation.
Display Damping:
A common time constant can be set for each screen display value of each measurement value. Time constant 0.0 to 200.0 seconds (shipped with 0.0 seconds).
Current Output:
Current signal (4 to 20 mA DC) proportional to instantaneous flow rate is output.
Pulse Output:
The totalized value of the flow rate is converted into the number of pulses converted by the pulse rate, and is output.
Frequency Output:
Frequency signal (Duty 50%) proportional to the instantaneous value of the flow rate is output. Output terminal is shared with pulse output.
Totalization Function:
Three independent totalizers can be allocated independently, including the start and stop of integration, for each measured value of volume flow rate, mass flow rate, and calorie.
Totalization Type:
Forward / reverse difference flow totalization, Absolute value totalization, Forward direction totalization, Reverse direction totalization
Totalization Display:
Select from actual flow rate display or count value display scaled by counter conversion rate.
Low-cut Function:
For each current output, pulse output, or frequency output, the output signal below the set actual flow rate can be cut. (*). It is independent for current output, common for pulse output and frequency output.
*: When "Forward and Reverse Flow Measurement" or "Absolute Range" is used, the output signal below the set actual flow rate value against the absolute value of the measured one is cut.

Output Processing Function:
Multi-range:
Flow range can be switched to two ranges by status input or automatic switching. By status output, it is possible to identify in what range the measurement is being measured, and the status is also displayed on the display.
Forward and Reverse Flow Measurement:
Flow rate measurement in both forward and reverse directions is possible. By status output, it is possible to identify in which direction the measurement is being performed, and the status is also displayed on the display.
Absolute Range:
With 12 mA as flow rate zero, measurements in the forward (12 to 20 mA) and reverse (4 to 12 mA) directions are possible in a single range.
Totalization Switch:
Status signal is output when the totalized value becomes equal to or larger than the set value.
Preset Totalization:
By parameter setting or status input, the totalized value is preset to zero or a set value.
0% Signal Lock:
With status input, the current output is forcibly fixed to 0%. Mode is selectable whether to continue output processing for instantaneous flow rate display/ pulse output/ flow rate totalization or to fix flow rate at 0.

Alarm Function:
Alarm Configuration:
Alarms are classified into system alarm (device failure), process alarm, setting alarm, and warning. Alarm output availability can be selected for each item.
Current Output at Alarm Occurrence:
The current output at alarm occurrence is arbitrarily selected from 2.4 mA or less, 3.8 mA fixed, 4 mA fixed, 20.5 mA fixed, 21.6 mA or more, measured value, or HOLD.
Alarm Countermeasure Indication:
A specific countermeasure method can be displayed on the display when an alarm occurs.
Alarm Type:
System Alarm:
CPU failure, A/D converter failure, Sensor coil circuit break (open), Sensor coil short circuit
Process Alarm:
Input signal error (signal overflow), Sensor empty pipe, Electrode adhesion (of insulator)
Setting Alarm:
Detect inconsistency in parameter setting
Warning:
Warning in a state where measurement can be continued
Alarm History: Keep history of up to four alarms.

Verification Function:
Function to diagnose the soundness of the device itself. Diagnose the magnetic circuit, excitation circuit, arithmetic processing circuit, etc. offline (i.e. flow measurement function stopped) and display the result without demounting the device from piping.

Data Management Function:
Store / Restore Function of Parameters:
Main parameters can be stored and restored using nonvolatile memory of display unit. The restore can also be used for copying parameters to another device (except for parameters under unmatched specification for the devices). When optional code MC is selected, this function is also available by using microSD card.

All Rights Reserved. Copyright © 2017, Yokogawa Electric Corporation

Data Logging Function (when optional code MC (microSD card) is selected):
It is possible to log up to four process data at the same time. In addition to displaying the logged results on the trend screen, it is also possible to connect the microSD card to a PC and retrieve the data.
Logging Cycle:
1 second, 10 seconds, 30 seconds, 1 minute, 5 minutes, 30 minutes, 1 hour
Logging Time:
10 minutes, 30 minutes, 1 hour, 3 hours, 12 hours, 24 hours, 72 hours, 240 hours, 720 hours, 1440 hours
Logging Data:
Flow velocity, Volume flow rate, Mass flow rate, Calorie, Flow noise, Adhesion resistance, Electrode potential (A, B), Flow signal peak value
Data Security During Power Failure:
Protection of data, such as parameters and integrated values, by nonvolatile memory at power failure.
Factory Default Parameter Restore:
It is possible to restore the parameters to the values that were set at the time of factory shipment.

Lightning Protection:
Built-in lightning protector for excitation(*), signal common(*), input/output terminals, and power supply terminal.
Test Standard: IEC61000-4-5
Test Method:
Series mode 1 kV / Common mode 2 kV
Surge waveform 8/20 μS
*: Integral Flowmeter is excluded.

■ CONFORMITY STANDARDS

If exporting the product, it must be fully complied with all applicable laws and regulations.

Safety Requirements:
EN61010-1
EN61010-2-030
CAN/CSA-C22.2 No.61010-1
CAN/CSA-C22.2 No.61010-2-30
CAN/CSA-C22.2 No.94.2
UL 61010-1
UL 61010-2-030
UL 50E
IEC 60529
Altitude at Installation Site:
Max. 2000 m above sea level
Installation Category (Overvoltage category): II
Micro Pollution Degree: 2
Macro Pollution Degree: 4
Protection Degree:
General-purpose: IP66/IP67, Type 4X (CSA)
Submersible: IP68*
Explosion Protection: Read "Explosion Protection".
Hygienic: IP66/IP67, Type 4X (CSA)
Hygienic with Explosion Protection: Read "Explosion Protection".
* Conforming to continuous dive under the test conditions as follows;
1 month with fresh water and 50 m under the water surface (hydraulic pressure 0.5 MPa). However, adverse conditions such as sewage and seawater are excluded.
Protect the cable by appropriate means, such as protected separately with conduit piping.

EMC:
EN61326-1 Class A, Table 2
EN61326-2-3
EN61326-2-5
(only for AXG integral type flow meter and AXG4A transmitter combined with AXG sensor)
EN61000-3-2 Class A
EN61000-3-3

CE marking (optional code EC):
CE marking is attached to non-Explosion protected type, ATEX Explosion protected type and IECEx Exprosion protected type.
The product which is attaching CE marking is in conformity with the statutory requirements of the applicable EU Directives.

EU RoHS Directive:
Note: Only applicable when optional code EC (CE marking) is selected.

Sanitary Standard:
3-A Sanitary Certification* (optional code 3A)
*: Only for process connection code HAB (Tri-Clamp)

Morocco conformity mark :
This conformity mark indicates that the product complies with Moroccan safety and EMC requirements.
Note: Applicable for AXG002 to 500. Except INMETRO explosion ptrotection type, code UF2.

Functional safety standard:
IEC 61508 (Parts 1 - 7: 2010; compliant with Functional Safety of Electrical/Electronic/ Programmable Electronic Safety-related Systems)
This product can be used in safety instrumented systems up to SIL2 in simplex configuration and SIL3 in redundant configuration.
For details, please refer to IM01E21A21-02EN (ADMAG TI Series AXG/AXW Magnetic Flowmeter Safety Manual).

All Rights Reserved. Copyright © 2017, Yokogawa Electric Corporation

PED (Pressure Equipment Directive):

Note: Applicable only when optional code EC (CE marking) is selected.

- **Technical Data**
  Module: H
  Type of Equipment: Piping
  Type of Fluid: Liquid and Gas
  Group of Fluid*4: 1 and 2

- **General-purpose, Submersible, and Explosion Protection**

MODEL	PROCESS CONNECTION	DN*1 (mm)	PS*1		PS•DN		CATEGORY*2, *4
			(bar)	(MPa)	(bar•mm)	(MPa•mm)	
AXG002	Wafer, Flange	2.5	40	4	100	10	Sound Engineering Practice (SEP)*3
AXG005	Wafer, Flange	5	40	4	200	20	Sound Engineering Practice (SEP)*3
AXG010	Wafer, Flange	10	40	4	400	40	Sound Engineering Practice (SEP)*3
AXG015	Wafer, Flange	15	40	4	600	60	Sound Engineering Practice (SEP)*3
AXG025	Wafer, Flange	25	40	4	1000	100	Sound Engineering Practice (SEP)*3
AXG032	Wafer, Flange	32	40	4	1280	128	II
AXG040	Wafer, Flange	40	40	4	1600	160	II
AXG050	Wafer, Flange	50	40	4	2000	200	II
AXG065	Wafer, Flange	65	40	4	2600	260	II
AXG080	Wafer, Flange	80	40	4	3200	320	II
AXG100	Wafer, Flange	100	40	4	4000	400	III
AXG125	Wafer	125	20	2	2500	250	II
	Flange	125	40	4	5000	500	III
AXG150	Wafer	150	20	2	3000	300	II
	Flange	150	40	4	6000	600	III
AXG200	Wafer	200	20	2	4000	400	III
	Flange	200	40	4	8000	800	III
AXG250	Flange	250	20	2	5000	500	III
AXG300	Flange	300	20	2	6000	600	III
AXG350	Flange	350	18	1.8	6300	630	III
AXG400	Flange	400	16	1.6	6400	640	III

- **Hygienic, and Hygienic Explosion Protection**

MODEL	DN*1 (mm)	PS*1		PS•DN		CATEGORY*2, *4
		(bar)	(MPa)	(bar•mm)	(MPa•mm)	
AXG015	15	10	1	150	15	Sound Engineering Practice (SEP)*3
AXG025	25	10	1	250	25	Sound Engineering Practice (SEP)*3
AXG032	32	10	1	320	32	I
AXG040	40	10	1	400	40	I
AXG050	50	10	1	500	50	I
AXG065	65	10	1	650	65	I
AXG080	80	10	1	800	80	I
AXG100	100	10	1	1000	100	I
AXG125	125	10	1	1250	125	II

*1: PS: Maximum allowable pressure for Pipe
PS indicates the allowable pressure for pipe of the Magnetic flowmeter at PED certification, and is different from the maximum working pressure as the Magnetic flowmeter.
DN: Nominal size
*2: For details, refer to “Table 6 covered by ANNEX II of Directive 2014/68/EU”.
*3: Article 4, paragraph 3 of Directive 2014/68/EU
*4: Models classified in categories I or II shall not be used for unstable gases of Group 1.

CRN (Canadian Registration Number):

Note: Applicable only when optional code CS (Canada domestic sales) is selected.

CRN is a registration number for pressure equipment, required to use it in each Canadian province or territory.

Integral flowmeter and Remote sensor (for size 2.5 to 400 mm) are registered by all provinces and territories in Canada.

All Rights Reserved. Copyright © 2017, Yokogawa Electric Corporation

■ HAZARDOUS AREA CLASSIFICATION

Select appropriate equipment in accordance with the laws and regulations of the relevant country/region, when it is used in a location where explosive atmospheres may be present.

ATEX

Applicable Standard:
EN IEC 60079-0, EN 60079-1, EN IEC 60079-7, EN 60079-11, EN 60079-31
Certificate:FM 17ATEX0031X

(Integral Flowmeter)

Flameproof (Explosion Protection Code: KF2)

Type of Gas Atmosphere Protection
Group: II
Category: 2G
Type of Protection:
Ex db eb ia IIC T6...T3 Gb
(Transmitter Wiring Terminal: M4 screw type)
Ex db eb ia IIC T6...T3 Gb
Terminal Compartment: Ex db or Ex eb
(Transmitter Wiring Terminal: Clamp type)

Type of Dust Atmosphere Protection
Group: II
Category: 2D
Type of Protection:
Ex tb IIIC T75°C...T130°C Db

Enclosure: IP66/IP67 in accordance with EN 60529
Maximum Surface Temperature:
See Table(a) and Table(b)
Ambient Temperature:
See Table(a) and Table(b)
Process Temperature:
See Table(a) and Table(b)
Power Supply:
100 to 240 Va.c. (50/60 Hz) / 100 to 120 Vd.c.
24 Va.c. (50/60 Hz) / 24 Vd.c.
Um: 250 V
Current I/O: 4 to 20 mA, 32 Vd.c. max.
Digital I/O: 30 Vd.c. max., 200 mA max.
Fieldbus I/O: 32 Vd.c max., 15 mA max.
Modbus I/O: 5 Vd.c. typ.

Flameproof with Intrinsically Safe output (Explosion Protection Code: KJ2)

Type of Gas Atmosphere Protection:
Group: II
Category: 2(1)G
Type of Protection:
Ex db eb ia [ia Ga] IIC T6...T3 Gb
Terminal Compartment: Ex db or Ex eb
(Transmitter Wiring Terminal: Clamp type)

Type of Dust Atmosphere Protection
Group: II
Category: 2(1)D
Type of Protection:
Ex tb [ia Da] IIIC T75°C...T130°C Db

Enclosure: IP66/IP67 in accordance with EN 60529
Maximum Surface Temperature:
See Table(a) and Table(b)
Ambient Temperature:
See Table(a) and Table(b)
Process Temperature:
See Table(a) and Table(b)
Power Supply:
100 to 240 Va.c. (50/60 Hz) / 100 to 120 Vd.c.
24 Va.c. (50/60 Hz) / 24 Vd.c.
Electrical parameters:
Terminals: L/+, N/-
Um: 250 V
Terminals: Iout1(+, -), Iout2(+, -)
Ui: 30 V, Ii: 300 mA, Pi: 1.25 W, Ci: 4.84 nF, Li: 12 μH
Terminals: P/Sout1(+, -), P/Sout2(+, -)
Ui: 30 V, Ii: 300 mA, Pi: 1.25 W, Ci: 14.6 nF, Li: 12 μH

Flameproof with Intrinsically Safe output for FOUNDATION Fieldbus / PROFIBUS PA (Explosion Protection Code: KT2)

Type of Gas Atmosphere Protection:
Group: II
Category: 2(1)G
Type of Protection:
Ex db eb ia [ia Ga] IIC T6...T3 Gb
Terminal Compartment: Ex db or Ex eb
(Transmitter Wiring Terminal: Clamp type)

Type of Dust Atmosphere Protection
Group: II
Category: 2(1)D
Type of Protection:
Ex tb [ia Da] IIIC T75°C...T130°C Db

Enclosure: IP66/IP67 in accordance with EN 60529
Maximum Surface Temperature:
See Table(a) and Table(b)
Ambient Temperature:
See Table(a) and Table(b)
Process Temperature:
See Table(a) and Table(b)
Power Supply:
100 to 240 Va.c. (50/60 Hz) / 100 to 120 Vd.c.
24 Va.c. (50/60 Hz) / 24 Vd.c.
Electrical parameters:
Terminals: L/+, N/-
Um: 250 V
Terminals: Fieldbus (+, -)
FISCO field device or
Ui: 30 V, Ii: 380 mA, Pi: 5.32 W, Ci: 5 nF, Li: 10 μH
Terminals: P/Sout1 (+, -)
Ui: 30 V, Ii: 300 mA, Pi: 1.25 W, Ci: 14.6 nF, Li: 12 μH

(Remote Sensor)

Flameproof (Explosion Protection Code: KF2)

Type of Gas Atmosphere Protection
Group: II
Category: 2G
Type of Protection:
Ex db eb ia IIC T6…T3 Gb

Type of Dust Atmosphere Protection
Group: II
Category: 2D
Type of Protection:
Ex tb IIIC T75°C...T150°C Db

Enclosure: IP66/IP67 in accordance with EN 60529
Maximum Surface Temperature:
See Table(a) and Table(b)
Ambient Temperature:
See Table(a) and Table(b)

All Rights Reserved. Copyright © 2017, Yokogawa Electric Corporation

Process Temperature:
See Table(a) and Table(b)
Um: 250 V

(Remote Transmitter)

Flameproof (Explosion Protection Code: KF2)

Type of Gas Atmosphere Protection
Group: II
Category: 2G
Type of Protection:
Ex db IIC T6 Gb
(Transmitter Wiring Terminal: M4 screw type)
Ex db IIC T6 Gb or Ex db eb IIC T6 Gb
(Transmitter Wiring Terminal: Clamp type)

Type of Dust Atmosphere Protection
Group: II
Category: 2D
Type of Protection:
Ex tb IIIC T75°C Db

Enclosure: IP66/IP67 in accordance with EN 60529
Maximum Surface Temperature: T75°C
Ambient Temperature: –40°C to +60°C
Power Supply:
100 to 240 Va.c. (50/60 Hz) / 100 to 120 Vd.c.
24 Va.c. (50/60 Hz) / 24 Vd.c.
Current I/O: 4 to 20 mA, 32 Vd.c. max.
Digital I/O: 30 Vd.c. max., 200 mA max.
Fieldbus I/O: 32 Vd.c max., 15 mA max.
Modbus I/O: 5 Vd.c. typ.

Flameproof with Intrinsically Safe output (Explosion Protection Code: KJ2)

Type of Gas Atmosphere Protection
Group: II
Category: 2(1)G
Type of Protection:
Ex db [ia Ga] IIC T6...T3 Gb or
Ex db eb [ia Ga] IIC T6...T3 Gb
(Transmitter Wiring Terminal: Clamp type)

Type of Dust Atmosphere Protection
Group: II
Category: 2(1)D
Type of Protection:
Ex tb [ia Da] IIIC T75°C Db

Enclosure: IP66/IP67 in accordance with EN 60529
Maximum Surface Temperature: T75°C
Ambient Temperature: –40°C to +60°C
Power Supply:
100 to 240 Va.c. (50/60 Hz) / 100 to 120 Vd.c.
24 Va.c. (50/60 Hz) / 24 Vd.c.
Electrical parameters:
Terminals: L/+, N/-
Um: 250 V
Terminals: Iout1(+, -), Iout2(+, -)
Ui: 30 V, Ii: 300 mA, Pi: 1.25 W, Ci: 4.84 nF, Li: 12 μH
Terminals: P/Sout1(+, -), P/Sout2(+, -)
Ui: 30 V, Ii: 300 mA, Pi: 1.25 W, Ci: 14.6 nF, Li: 12 μH

Flameproof with Intrinsically Safe output for FOUNDATION Fieldbus / PROFIBUS PA (Explosion Protection Code: KT2)

Type of Gas Atmosphere Protection
Group: II
Category: 2(1)G
Type of Protection:
Ex db [ia Ga] IIC T6...T3 Gb or
Ex db eb [ia Ga] IIC T6...T3 Gb
(Transmitter Wiring Terminal: Clamp type)

Type of Dust Atmosphere Protection
Group: II
Category: 2(1)D
Type of Protection:
Ex tb [ia Da] IIIC T75°C Db

Enclosure: IP66/IP67 in accordance with EN 60529
Maximum Surface Temperature: T75°C
Ambient Temperature: –40°C to +60°C
Power Supply:
100 to 240 Va.c. (50/60 Hz) / 100 to 120 Vd.c.
24 Va.c. (50/60 Hz) / 24 Vd.c.
Electrical parameters:
Terminals: L/+, N/-
Um: 250 V
Terminals: Fieldbus (+, -)
FISCO field device or
Ui: 30 V, Ii: 380 mA, Pi: 5.32 W, Ci: 5 nF, Li: 10 μH
Terminals: P/Sout1 (+, -)
Ui: 30 V, Ii: 300 mA, Pi: 1.25 W, Ci: 14.6 nF, Li: 12 μH

All Rights Reserved. Copyright © 2017, Yokogawa Electric Corporation

Table (a): Temperature Table (ATEX)

Model	Size	Process Connection	Lining	Temperature Table*	
				Integral Flowmeter	Remote Sensor
AXG002, AXG005, AXG010, AXG015	2.5 to 15 mm (0.1 to 0.5 in.)	Wafer, Flange	PFA Lining	Table A	Table C
AXG025, AXG032, AXG040, AXG050, AXG065, AXG080, AXG100, AXG125	25 to 125 mm (1 to 5 in.)	Wafer, Flange	PFA Lining	Table B	Table D
AXG150, AXG200, AXG250, AXG300, AXG350, AXG400	150 to 400 mm (6 to 16 in.)	Wafer, Flange	PFA Lining	Table A	Table C
AXG015, AXG025, AXG032, AXG040, AXG050, AXG065, AXG080, AXG100, AXG125	15 to 125 mm (0.5 to 5 in.)	Clamp, Union, Butt Weld Joint	PFA Lining	Table E	Table F
AXG002, AXG005, AXG010, AXG015, AXG025, AXG040, AXG050, AXG080, AXG100, AXG150, AXG200	2.5 to 200 mm (0.1 to 8 in.)	Wafer	Ceramics Tube	Table G	Table H

*: For details, see Table No. on Table (b).

Table (b): Ambient Temperature and Process Temperature (ATEX)

Table No.	Ambient Temperature	Temperature Class	Maximum Surface Temperature	Process Temperature
A	-40°C to +60°C	T6	T75°C	-40°C to +75°C
		T5	T90°C	-40°C to +90°C
		T4	T120°C	-40°C to +120°C
		T3	T130°C	-40°C to +130°C
B	-40°C to +45°C	T6	T75°C	-40°C to +50°C
	-40°C to +60°C	T5	T90°C	-40°C to +75°C
		T4	T120°C	-40°C to +120°C
		T3	T130°C	-40°C to +130°C
C	-40°C to +60°C	T6	T75°C	-40°C to +75°C
		T5	T90°C	-40°C to +90°C
		T4	T120°C	-40°C to +120°C
		T3	T150°C	-40°C to +150°C
D	-40°C to +45°C	T6	T75°C	-40°C to +50°C
	-40°C to +60°C	T5	T90°C	-40°C to +75°C
		T4	T120°C	-40°C to +120°C
		T3	T150°C	-40°C to +150°C
E	-10°C to +45°C	T6	T75°C	-10°C to +50°C
	-10°C to +60°C	T5	T90°C	-10°C to +75°C
		T4	T120°C	-10°C to +120°C
		T3	T130°C	-10°C to +130°C
F	-10°C to +45°C	T6	T75°C	-10°C to +50°C
	-10°C to +60°C	T5	T90°C	-10°C to +75°C
		T4	T120°C	-10°C to +120°C
		T3	T150°C	-10°C to +150°C
G	-10°C to +60°C	T6	T75°C	-10°C to +75°C
		T5	T90°C	-10°C to +90°C
		T4	T120°C	-10°C to +120°C
		T3	T130°C	-10°C to +130°C
H	-10°C to +60°C	T6	T75°C	-10°C to +75°C
		T5	T90°C	-10°C to +90°C
		T4	T120°C	-10°C to +120°C
		T3	T150°C	-10°C to +150°C

All Rights Reserved. Copyright © 2017, Yokogawa Electric Corporation

IECEx

Applicable Standard:
IEC 60079-0, IEC 60079-1, IEC 60079-7,
IEC 60079-11, IEC 60079-31
Certificate: IECEx FMG 17.0014X

(Integral Flowmeter)

Flameproof (Explosion Protection Code: SF2)

Type of Gas Atmosphere Protection
Ex db eb ia IIC T6...T3 Gb
(Transmitter Wiring Terminal: M4 screw type)
Ex db eb ia IIC T6...T3 Gb
Terminal Compartment: Ex db or Ex eb
(Transmitter Wiring Terminal: Clamp type)

Type of Dust Atmosphere Protection
Ex tb IIIC T75°C...T130°C Db

Enclosure: IP66/IP67 in accordance with IEC 60529
Maximum Surface Temperature:
See Table(c) and Table(d).
Ambient Temperature:
See Table(c) and Table(d).
Process Temperature:
See Table(c) and Table(d).
Power Supply:
100 to 240 Va.c. (50/60 Hz) / 100 to 120 Vd.c.
24 Va.c. (50/60 Hz) / 24 Vd.c.
Um: 250 V
Current I/O: 4 to 20 mA, 32 Vd.c. max.
Digital I/O: 30 Vd.c. max., 200 mA max.
Fieldbus I/O: 32 Vd.c max., 15 mA max.
Modbus I/O: 5 Vd.c. typ.

Flameproof with Intrinsically Safe output (Explosion Protection Code: SJ2)

Type of Gas Atmosphere Protection
Ex db eb ia [ia Ga] IIC T6...T3 Gb
Terminal Compartment: Ex db or Ex eb

Type of Dust Atmosphere Protection
Ex tb [ia Da] IIIC T75°C...T130°C Db

Enclosure: IP66/IP67 in accordance with IEC 60529
Maximum Surface Temperature:
See Table(c) and Table(d).
Ambient Temperature:
See Table(c) and Table(d).
Process Temperature:
See Table(c) and Table(d).
Power Supply:
100 to 240 Va.c. (50/60 Hz) / 100 to 120 Vd.c.
24 Va.c. (50/60 Hz) / 24 Vd.c.
Electrical parameters:
Terminals: L/+, N/-
Um: 250 V
Terminals: Iout1(+, -), Iout2(+, -)
Ui: 30 V, Ii: 300 mA, Pi: 1.25 W, Ci: 4.84 nF, Li: 12 μH
Terminals: P/Sout1(+, -), P/Sout2(+, -)
Ui: 30 V, Ii: 300 mA, Pi: 1.25 W, Ci: 14.6 nF, Li: 12 μH

Flameproof with Intrinsically Safe output for FOUNDATION Fieldbus / PROFIBUS PA (Explosion Protection Code: ST2)

Type of Gas Atmosphere Protection
Ex db eb ia [ia Ga] IIC T6...T3 Gb
Terminal Compartment: Ex db or Ex eb
(Transmitter Wiring Terminal: Clamp type)

Type of Dust Atmosphere Protection
Ex tb [ia Da] IIIC T75°C...T130°C Db

Enclosure: IP66/IP67 in accordance with IEC 60529
Maximum Surface Temperature:
See Table(c) and Table(d).
Ambient Temperature:
See Table(c) and Table(d).
Process Temperature:
See Table(c) and Table(d).
Power Supply:
100 to 240 Va.c. (50/60 Hz) / 100 to 120 Vd.c.
24 Va.c. (50/60 Hz) / 24 Vd.c.
Electrical parameters:
Terminals: L/+, N/-
Um: 250 V
Terminals: Fieldbus (+, -)
FISCO field device or
Ui: 30 V, Ii: 380 mA, Pi: 5.32 W, Ci: 5 nF, Li: 10 μH
Terminals: P/Sout1 (+, -)
Ui: 30 V, Ii: 300 mA, Pi: 1.25 W, Ci: 14.6 nF, Li: 12 μH

(Remote Sensor)

Flameproof (Explosion Protection Code: SF2)

Type of Gas Atmosphere Protection
Ex db eb ia IIC T6…T3 Gb

Type of Dust Atmosphere Protection
Ex tb IIIC T75°C...T150°C Db

Enclosure: IP66/IP67 in accordance with IEC 60529
Maximum Surface Temperature:
See Table(c) and Table(d).
Ambient Temperature:
See Table(c) and Table(d).
Process Temperature:
See Table(c) and Table(d).
Um: 250 V

(Remote Transmitter)

Flameproof (Explosion Protection Code: SF2)

Type of Gas Atmosphere Protection
Ex db IIC T6 Gb
(Transmitter Wiring Terminal: M4 screw type)
Ex db IIC T6 Gb or Ex db eb IIC T6 Gb
(Transmitter Wiring Terminal: Clamp type)

Type of Dust Atmosphere Protection
Ex tb IIIC T75°C Db

Enclosure: IP66/IP67 in accordance with IEC 60529
Maximum Surface Temperature: T75°C
Ambient Temperature: –40°C to +60°C
Power Supply:
100 to 240 Va.c. (50/60 Hz) / 100 to 120 Vd.c.
24 Va.c. (50/60 Hz) / 24 Vd.c.
Current I/O: 4 to 20 mA, 32 Vd.c. max.
Digital I/O: 30 Vd.c. max., 200 mA max.
Fieldbus I/O: 32 Vd.c max., 15 mA max.
Modbus I/O: 5 Vd.c. typ.

All Rights Reserved. Copyright © 2017, Yokogawa Electric Corporation

Flameproof with Intrinsically Safe output (Explosion Protection Code: SJ2)

Type of Gas Atmosphere Protection
Ex db [ia Ga] IIC T6...T3 Gb or
Ex db eb [ia Ga] IIC T6...T3 Gb

Type of Dust Atmosphere Protection
Ex tb [ia Da] IIIC T75°C Db

Enclosure: IP66/IP67 in accordance with IEC 60529
Maximum Surface Temperature: T75°C
Ambient Temperature: –40°C to +60°C
Power Supply:
100 to 240 Va.c. (50/60 Hz) / 100 to 120 Vd.c.
24 Va.c. (50/60 Hz) / 24 Vd.c.
Electrical parameters:
Terminals: L/+, N/-
Um: 250 V
Terminals: Iout1(+, -), Iout2(+, -)
Ui: 30 V, Ii: 300 mA, Pi: 1.25 W, Ci: 4.84 nF, Li: 12 μH
Terminals: P/Sout1(+, -), P/Sout2(+, -)
Ui: 30 V, Ii: 300 mA, Pi: 1.25 W, Ci: 14.6 nF, Li: 12 μH

Flameproof with Intrinsically Safe output for FOUNDATION Fieldbus / PROFIBUS PA (Explosion Protection Code: ST2)

Type of Gas Atmosphere Protection
Ex db [ia Ga] IIC T6...T3 Gb or
Ex db eb [ia Ga] IIC T6...T3 Gb
(Transmitter Wiring Terminal: Clamp type)

Type of Dust Atmosphere Protection
Ex tb [ia Da] IIIC T75°C Db

Enclosure: IP66/IP67 in accordance with IEC 60529
Maximum Surface Temperature: T75°C
Ambient Temperature: –40°C to +60°C
Power Supply:
100 to 240 Va.c. (50/60 Hz) / 100 to 120 Vd.c.
24 Va.c. (50/60 Hz) / 24 Vd.c.
Electrical parameters:
Terminals: L/+, N/-
Um: 250 V
Terminals: Fieldbus (+, -)
FISCO field device or
Ui: 30 V, Ii: 380 mA, Pi: 5.32 W, Ci: 5 nF, Li: 10 μH
Terminals: P/Sout1 (+, -)
Ui: 30 V, Ii: 300 mA, Pi: 1.25 W, Ci: 14.6 nF, Li: 12 μH

FM (USA)
Applicable Standard:
FM 3600, FM3610, FM3615, FM3616, FM3810, ANSI/UL 50E, NEMA 250, ANSI/UL 60079-0, ANSI/UL 60079-7, ANSI/UL 60079-11, ANSI/UL 60079-18, ANSI/UL 61010-1, ANSI/UL 61010-2-30
Certificate:
FM17US0140X

(Integral Flowmeter)

Flameproof (Explosion Protection Code: FF2)

Type of Protection:
Explosionproof and Special protection for Class I, Division 1, Groups A, B, C and D.
Dust-Ignitionproof for Class II,III, Division 1, Groups E, F and G.
with Intrinsically Safe Electrodes for Class I, Division 1, Groups A, B, C and D.
Temperature Class T6…T3.

Enclosure: Type 4X
Ambient Temperature:
See Table(c) and Table(d).
Process Temperature:
See Table(c) and Table(d).
Power Supply:
100 to 240 Va.c. (50/60 Hz) / 100 to 120 Vd.c.
24 Va.c. (50/60 Hz) / 24 Vd.c.
Um: 250 V
Current I/O: 4 to 20 mA, 32 Vd.c. max.
Digital I/O: 30 Vd.c. max., 200 mA max.
Fieldbus I/O: 32 Vd.c max., 15 mA max.
Modbus I/O: 5 Vd.c. typ.

Flameproof with Intrinsically Safe output (Explosion Protection Code: FJ2)

Type of Protection:
Explosionproof and Special protection for Class I, Division 1, Groups A, B, C and D.
Dust-Ignitionproof for Class II,III, Division 1, Groups E, F and G.
with Intrinsically Safe Electrodes for Class I, Division 1, Groups A, B, C and D.
Associated Apparatus for Class I,II,III, Division 1, Groups A, B, C, D, E, F and G.
Temperature Class T6…T3.

Enclosure: Type 4X
Ambient Temperature:
See Table(c) and Table(d).
Process Temperature:
See Table(c) and Table(d).
Power Supply:
100 to 240 Va.c. (50/60 Hz) / 100 to 120 Vd.c.
24 Va.c. (50/60 Hz) / 24 Vd.c.
Electrical parameters:
Terminals: L/+, N/-
Um: 250 V
Terminals: Iout1(+, -), Iout2(+, -)
Ui: 30 V, Ii: 300 mA, Pi: 1.25 W, Ci: 4.84 nF, Li: 12 μH
Terminals: P/Sout1(+, -), P/Sout2(+, -)
Ui: 30 V, Ii: 300 mA, Pi: 1.25 W, Ci: 14.6 nF, Li: 12 μH

All Rights Reserved. Copyright © 2017, Yokogawa Electric Corporation

Flameproof with Intrinsically Safe output for FOUNDATION Fieldbus / PROFIBUS PA (Explosion Protection Code: FT2)

Type of Protection:
Explosionproof and Special protection for Class I, Division 1, Groups A, B, C and D.
Dust-Ignitionproof for Class II,III, Division 1, Groups E, F and G.
with Intrinsically Safe Electrodes for Class I, Division 1, Groups A, B, C and D.
Associated Apparatus for Class I,II,III, Division 1, Groups A, B, C, D, E, F and G.
Temperature Class T6…T3.

Enclosure: Type 4X
Ambient Temperature:
See Table(c) and Table(d).
Process Temperature:
See Table(c) and Table(d).
Power Supply:
100 to 240 Va.c. (50/60 Hz) / 100 to 120 Vd.c.
24 Va.c. (50/60 Hz) / 24 Vd.c.
Electrical parameters:
Terminals: L/+, N/-
Um: 250 V
Terminals: Fieldbus (+, -)
FISCO field device or
Ui: 30 V, Ii: 380 mA, Pi: 5.32 W, Ci: 5 nF, Li: 10 μH
Terminals: P/Sout1 (+, -)
Ui: 30 V, Ii: 300 mA, Pi: 1.25 W, Ci: 14.6 nF, Li: 12 μH

(Remote Sensor)

Flameproof (Explosion Protection Code: FF2)

Type of Protection:
Explosionproof and Special Protection for Class I, Division 1, Groups A, B, C and D.
Dust-Ignitionproof for Class II,III, Division 1, Groups E, F and G.
with Intrinsically Safe Electrodes for Class I, Division 1, Groups A, B, C and D.
Temperature Class T6…T3.

Enclosure: Type 4X
Ambient Temperature:
See Table(c) and Table(d).
Process Temperature:
See Table(c) and Table(d).
Um: 250 V

(Remote Transmitter)

Flameproof (Explosion Protection Code: FF2)

Type of Protection:
Explosionproof for Class I, Division 1, Groups A, B, C and D.
Dust-Ignitionproof for Class II,III, Division 1, Groups E, F and G.
Temperature Class T6.

Enclosure: Type 4X
Ambient Temperature: -40°C to +60°C
Power Supply:
100 to 240 Va.c. (50/60 Hz) / 100 to 120 Vd.c.
24 Va.c. (50/60 Hz) / 24 Vd.c.
Current I/O: 4 to 20 mA, 32 Vd.c. max.
Digital I/O: 30 Vd.c. max., 200 mA max.
Fieldbus I/O: 32 Vd.c max., 15 mA max.
Modbus I/O: 5 Vd.c. typ.

Flameproof with Intrinsically Safe output (Explosion Protection Code: FJ2)

Type of Protection:
Explosionproof for Class I, Division 1, Groups A, B, C and D.
Dust-Ignitionproof for Class II,III, Division 1, Groups E, F and G.
Associated Apparatus for Class I,II,III, Division 1, Groups A, B, C, D, E, F and G.
Temperature Class T6.

Enclosure: Type 4X
Ambient Temperature: -40°C to +60°C
Power Supply:
100 to 240 Va.c. (50/60 Hz) / 100 to 120 Vd.c.
24 Va.c. (50/60 Hz) / 24 Vd.c.
Electrical parameters:
Terminals: L/+, N/-
Um: 250 V
Terminals: Iout1(+, -), Iout2(+, -)
Ui: 30 V, Ii: 300 mA, Pi: 1.25 W, Ci: 4.84 nF, Li: 12 μH
Terminals: P/Sout1(+, -), P/Sout2(+, -)
Ui: 30 V, Ii: 300 mA, Pi: 1.25 W, Ci: 14.6 nF, Li: 12 μH

Flameproof with Intrinsically Safe output for FOUNDATION Fieldbus / PROFIBUS PA (Explosion Protection Code: FT2)

Type of Protection:
Explosionproof for Class I, Division 1, Groups A, B, C and D.
Dust-Ignitionproof for Class II,III, Division 1, Groups E, F and G.
Associated Apparatus for Class I,II,III, Division 1, Groups A, B, C, D, E, F and G.
Temperature Class T6.

Enclosure: Type 4X
Ambient Temperature: -40°C to +60°C
Power Supply:
100 to 240 Va.c. (50/60 Hz) / 100 to 120 Vd.c.
24 Va.c. (50/60 Hz) / 24 Vd.c.
Electrical parameters:
Terminals: L/+, N/-
Um: 250 V
Terminals: Fieldbus (+, -)
FISCO field device or
Ui: 30 V, Ii: 380 mA, Pi: 5.32 W, Ci: 5 nF, Li: 10 μH
Terminals: P/Sout1 (+, -)
Ui: 30 V, Ii: 300 mA, Pi: 1.25 W, Ci: 14.6 nF, Li: 12 μH

All Rights Reserved. Copyright © 2017, Yokogawa Electric Corporation

Japan Flameproof

(Integral Flowmeter)
Applicable Standard:
JNIOSH-TR-46-1
JNIOSH-TR-46-2
JNIOSH-TR-46-5
JNIOSH-TR-46-6
JNIOSH-TR-46-9
Construction: Ex db eb ia IIC T4 Gb
Ex tb IIIC T120°C Db
Enclosure: IP66/IP67
Ambient Temperature:
-40°C to +60°C (PFA Lining)
-10°C to +60°C (Ceramics Tube)
Process Temperature:
-40°C to +120°C (PFA Lining)
-10°C to +120°C (Ceramics Tube)
Maximum Surface Temperature: +120°C
Power Supply:
100 to 240 Va.c. (50/60 Hz) / 100 to 120 Vd.c.
24 Va.c. (50/60 Hz) / 24 Vd.c.
Um=250 V
Current I/O: 4 to 20 mA, 32 Vd.c. max.
Digital I/O: 30 Vd.c. max., 200 mA max.
Excitation Circuit: 160 V max.
Power consumption: 13 W max.

(Remote Sensor)
Applicable Standard:
JNIOSH-TR-46-1
JNIOSH-TR-46-2
JNIOSH-TR-46-5
JNIOSH-TR-46-6
JNIOSH-TR-46-9
Construction: Ex db eb ia IIC T4 Gb
Ex tb IIIC T120°C Db
Enclosure: IP66/IP67
Ambient Temperature:
-40°C to +60°C (PFA Lining)
-10°C to +60°C (Ceramics Tube)
Process Temperature:
-40°C to +120°C (PFA Lining)
-10°C to +120°C (Ceramics Tube)
Maximum Surface Temperature: +120°C
Um=250 V
Excitation Circuit: 160 V max, 13 W max.

(Remote Transmitter)
Applicable Standard:
JNIOSH-TR-46-1
JNIOSH-TR-46-2
JNIOSH-TR-46-9
Construction: Ex db IIC T6 Gb
Ex tb IIIC T75°C Db
Enclosure: IP66/IP67
Ambient Temperature: -40°C to +60°C
Maximum Surface Temperature: +75°C
Power Supply:
100 to 240 Va.c. (50/60 Hz) / 100 to 120 Vd.c.
24 Va.c. (50/60 Hz) / 24 Vd.c.
Current I/O: 4 to 20 mA, 32 Vd.c. max.
Digital I/O: 30 Vd.c. max., 200 mA max.
Excitation Circuit: 160 V max.
Power consumption: 13 W max.

Korea
Applicable Standard:
Notice of Ministry of Labor No. 2016-54
Harmonized with IEC 60079-0, IEC 60079-1, IEC 60079-7, IEC 60079-11
Certificate:
19-KA4BO-0020X (Integral flowmeter)
19-KA4BO-0022X (Remote Sensor)
19-KA4BO-0021X (Remote Transmitter)

(Integral Flowmeter)
Type of Gas Atmosphere Protection
Ex d e ia IIC T6...T3

Enclosure: IP66/IP67 in accordance with IEC 60529
Maximum Surface Temperature:
See Table(c) and Table(d).
Ambient Temperature:
See Table(c) and Table(d).
Process Temperature:
See Table(c) and Table(d).
Power Supply:
100 to 240 Va.c. (50/60 Hz) / 100 to 120 Vd.c.
24 Va.c. (50/60 Hz) / 24 Vd.c.
Um: 250 V
Current I/O: 4 to 20 mA, 32 Vd.c. max.
Digital I/O: 30 Vd.c. max., 200 mA max.

(Remote Sensor)
Type of Gas Atmosphere Protection
Ex d e ia IIC T6...T3

Enclosure: IP66/IP67 in accordance with IEC 60529
Maximum Surface Temperature:
See Table(c) and Table(d).
Ambient Temperature:
See Table(c) and Table(d).
Process Temperature:
See Table(c) and Table(d).
Um: 250 V

(Remote Transmitter)
Type of Gas Atmosphere Protection
Ex d IIC T6

Enclosure: IP66/IP67 in accordance with IEC 60529
Maximum Surface Temperature: T75°C
Ambient Temperature: –40°C to +60°C
Power Supply:
100 to 240 Va.c. (50/60 Hz) / 100 to 120 Vd.c.
24 Va.c. (50/60 Hz) / 24 Vd.c.
Current I/O: 4 to 20 mA, 32 Vd.c. max.
Digital I/O: 30 Vd.c. max., 200 mA max.

All Rights Reserved. Copyright © 2017, Yokogawa Electric Corporation

INMETRO

Applicable Standard:
ABNT NBR IEC 60079-0
ABNT NBR IEC 60079-1
ABNT NBR IEC 60079-7
ABNT NBR IEC 60079-11
ABNT NBR IEC 60079-31
Certificate: TÜV 18.3229 X

(Integral Flowmeter)

Type of Gas Atmosphere Protection
Ex db eb ia IIC T6...T3 Gb
(Transmitter Wiring Terminal: M4 screw type)
Ex db eb ia IIC T6...T3 Gb
Terminal Compartment: Ex db or Ex eb
(Transmitter Wiring Terminal: Clamp type)

Type of Dust Atmosphere Protection
Ex tb IIIC T75°C...T130°C Db

Enclosure: IP66/IP67 in accordance with IEC 60529
Maximum Surface Temperature:
See Table(c) and Table(d).
Ambient Temperature:
See Table(c) and Table(d).
Process Temperature:
See Table(c) and Table(d).
Power Supply:
100 to 240 Va.c. (50/60 Hz) / 100 to 120 Vd.c.
24 Va.c. (50/60 Hz) / 24 Vd.c.
Um: 250 V
Current I/O: 4 to 20 mA, 32 Vd.c. max.
Digital I/O: 30 Vd.c. max., 200 mA max.

(Remote Sensor)

Type of Gas Atmosphere Protection
Ex db eb ia IIC T6…T3 Gb

Type of Dust Atmosphere Protection
Ex tb IIIC T75°C...T150°C Db

Enclosure: IP66/IP67 in accordance with IEC 60529
Maximum Surface Temperature:
See Table(c) and Table(d).
Ambient Temperature:
See Table(c) and Table(d).
Process Temperature:
See Table(c) and Table(d).
Um: 250 V

(Remote Transmitter)

Type of Gas Atmosphere Protection
Ex db IIC T6 Gb
(Transmitter Wiring Terminal: M4 screw type)
Ex db IIC T6 Gb or Ex db eb IIC T6 Gb
(Transmitter Wiring Terminal: Clamp type)

Type of Dust Atmosphere Protection
Ex tb IIIC T75°C Db

Enclosure: IP66/IP67 in accordance with IEC 60529
Maximum Surface Temperature: T75°C
Ambient Temperature: –40°C to +60°C
Power Supply:
100 to 240 Va.c. (50/60 Hz) / 100 to 120 Vd.c.
24 Va.c. (50/60 Hz) / 24 Vd.c.
Current I/O: 4 to 20 mA, 32 Vd.c. max.
Digital I/O: 30 Vd.c. max., 200 mA max.

EAC

Applicable Standard:
ГОСТ 31610.0 (IEC 60079-0), ГОСТ IEC 60079-1,
ГОСТ Р МЭК 60079-7, ГОСТ 31610.11 (IEC 60079-11),
ГОСТ Р МЭК 60079-27, ГОСТ IEC 60079-31
Certificate: ЕАЭС RU C-JP.AA87.B.00388/20

(Integral Flowmeter)

Flameproof (Explosion Protection Code: GF2)

Type of Gas Atmosphere Protection
1Ex db e ia IIC T6...T3 Gb X
(Transmitter Wiring Terminal: M4 screw type)
1Ex db e ia IIC T6...T3 Gb X
Terminal Compartment: Ex db or Ex e
(Transmitter Wiring Terminal: Clamp type)

Type of Dust Atmosphere Protection
Ex tb IIIC T75°C...T130°C Db X

Enclosure: IP66/IP67 in accordance with ГОСТ 14254
Maximum Surface Temperature:
See Table(c) and Table(d).
Ambient Temperature:
See Table(c) and Table(d).
Process Temperature:
See Table(c) and Table(d).
Power Supply:
100 to 240 Va.c. (50/60 Hz) / 100 to 120 Vd.c.
24 Va.c. (50/60 Hz) / 24 Vd.c.
Um: 250 V
Current I/O: 4 to 20 mA, 32 Vd.c. max.
Digital I/O: 30 Vd.c. max., 200 mA max.
Fieldbus I/O: 32 Vd.c max., 15 mA max.

Flameproof with Intrinsically Safe output
(Explosion Protection Code: GJ2)

Type of Gas Atmosphere Protection
1Ex db e ia [ia Ga] IIC T6...T3 Gb X
Terminal Compartment: Ex db or Ex e
(Transmitter Wiring Terminal: Clamp type)

Type of Dust Atmosphere Protection
Ex tb [ia Da] IIIC T75°C...T130°C Db X

Enclosure: IP66/IP67 in accordance with ГОСТ 14254
Maximum Surface Temperature:
See Table(c) and Table(d).
Ambient Temperature:
See Table(c) and Table(d).
Process Temperature:
See Table(c) and Table(d).
Power Supply:
100 to 240 Va.c. (50/60 Hz) / 100 to 120 Vd.c.
24 Va.c. (50/60 Hz) / 24 Vd.c.
Electrical parameters:
Terminals: L/+, N/-
Um: 250 V
Terminals: Iout1(+, -), Iout2(+, -)
Ui: 30 V, Ii: 300 mA, Pi: 1.25 W, Ci: 4.84 nF, Li: 12 μH
Terminals: P/Sout1(+, -), P/Sout2(+, -)
Ui: 30 V, Ii: 300 mA, Pi: 1.25 W, Ci: 14.6 nF, Li: 12 μH

All Rights Reserved. Copyright © 2017, Yokogawa Electric Corporation

Flameproof with Intrinsically Safe output for FOUNDATION Fieldbus

(Explosion Protection Code: GT2)

Type of Gas Atmosphere Protection
1Ex db e ia [ia Ga] IIC T6...T3 Gb X
Terminal Compartment: Ex db or Ex e
(Transmitter Wiring Terminal: Clamp type)

Type of Dust Atmosphere Protection
Ex tb [ia Da] IIIC T75°C...T130°C Db X

Enclosure: IP66/IP67 in accordance with ГОСТ 14254
Maximum Surface Temperature:
See Table(c) and Table(d).
Ambient Temperature:
See Table(c) and Table(d).
Process Temperature:
See Table(c) and Table(d).
Power Supply:
100 to 240 Va.c. (50/60 Hz) / 100 to 120 Vd.c.
24 Va.c. (50/60 Hz) / 24 Vd.c.
Electrical parameters:
Terminals: L/+, N/-
Um: 250 V
Terminals: Fieldbus (+, -)
FISCO field device or
Ui: 30 V, Ii: 380 mA, Pi: 5.32 W, Ci: 5 nF, Li: 10 μH
Terminals: P/Sout1 (+, -)
Ui: 30 V, Ii: 300 mA, Pi: 1.25 W, Ci: 14.6 nF, Li: 12 μH

(Remote Sensor)

Flameproof (Explosion Protection Code: GF2)

Type of Gas Atmosphere Protection
1Ex db e ia IIC T6…T3 Gb X

Type of Dust Atmosphere Protection
Ex tb IIIC T75°C...T150°C Db X

Enclosure: IP66/IP67 in accordance with ГОСТ 14254
Maximum Surface Temperature:
See Table(c) and Table(d).
Ambient Temperature:
See Table(c) and Table(d).
Process Temperature:
See Table(c) and Table(d).
Um: 250 V

(Remote Transmitter)

Flameproof (Explosion Protection Code: GF2)

Type of Gas Atmosphere Protection
1Ex db IIC T6 Gb X
(Transmitter Wiring Terminal: M4 screw type)
1Ex db IIC T6 Gb X or 1Ex db e IIC T6 Gb X
(Transmitter Wiring Terminal: Clamp type)

Type of Dust Atmosphere Protection
Ex tb IIIC T75°C Db X

Enclosure: IP66/IP67 in accordance with ГОСТ 14254
Maximum Surface Temperature: T75°C
Ambient Temperature: –40°C to +60°C
Power Supply:
100 to 240 Va.c. (50/60 Hz) / 100 to 120 Vd.c.
24 Va.c. (50/60 Hz) / 24 Vd.c.
Current I/O: 4 to 20 mA, 32 Vd.c. max.
Digital I/O: 30 Vd.c. max., 200 mA max.
Fieldbus I/O: 32 Vd.c max., 15 mA max.

Flameproof with Intrinsically Safe output

(Explosion Protection Code: GJ2)

Type of Gas Atmosphere Protection
1Ex db [ia Ga] IIC T6 Gb X or
1Ex db e [ia Ga] IIC T6 Gb X
(Transmitter Wiring Terminal: Clamp type)

Type of Dust Atmosphere Protection
Ex tb [ia Da] IIIC T75°C Db X

Enclosure: IP66/IP67 in accordance with ГОСТ 14254
Maximum Surface Temperature: T75°C
Ambient Temperature: –40°C to +60°C
Power Supply:
100 to 240 Va.c. (50/60 Hz) / 100 to 120 Vd.c.
24 Va.c. (50/60 Hz) / 24 Vd.c.
Electrical parameters:
Terminals: L/+, N/-
Um: 250 V
Terminals: Iout1(+, -), Iout2(+, -)
Ui: 30 V, Ii: 300 mA, Pi: 1.25 W, Ci: 4.84 nF, Li: 12 μH
Terminals: P/Sout1(+, -), P/Sout2(+, -)
Ui: 30 V, Ii: 300 mA, Pi: 1.25 W, Ci: 14.6 nF, Li: 12 μH

Flameproof with Intrinsically Safe output for FOUNDATION Fieldbus

(Explosion Protection Code: GT2)

Type of Gas Atmosphere Protection
1Ex db [ia Ga] IIC T6 Gb X or
1Ex db e [ia Ga] IIC T6 Gb X
(Transmitter Wiring Terminal: Clamp type)

Type of Dust Atmosphere Protection
Ex tb [ia Da] IIIC T75°C Db X

Enclosure: IP66/IP67 in accordance with ГОСТ 14254
Maximum Surface Temperature: T75°C
Ambient Temperature: –40°C to +60°C
Power Supply:
100 to 240 Va.c. (50/60 Hz) / 100 to 120 Vd.c.
24 Va.c. (50/60 Hz) / 24 Vd.c.
Electrical parameters:
Terminals: L/+, N/-
Um: 250 V
Terminals: Fieldbus (+, -)
FISCO field device or
Ui: 30 V, Ii: 380 mA, Pi: 5.32 W, Ci: 5 nF, Li: 10 μH
Terminals: P/Sout1 (+, -)
Ui: 30 V, Ii: 300 mA, Pi: 1.25 W, Ci: 14.6 nF, Li: 12 μH

All Rights Reserved. Copyright © 2017, Yokogawa Electric Corporation

NEPSI

Applicable Standard:
GB/T 3836.1-2021, GB/T 3836.2-2021,
GB/T 3836.3-2021, GB/T 3836.4-2021,
GB/T 3836.31-2021

Certificate:
GYJ23.1319X

(Integral Flowmeter)
Flameproof (Explosion Protection Code: NF2)
Type of Gas Atmosphere Protection
Ex db eb ia IIC T3…T6 Gb
(Transmitter wiring terminal: M4 screw type)
Terminal Compartment: Ex db or Ex eb
(Transmitter wiring terminal: clamp type)
Type of Dust Atmosphere Protection
Ex tb IIIC T75°C…T130°C Db

Enclosure: IP66/IP67, in accordance with GB 4208
Maximum Surface Temperature:
See Table (c) and Table (d)
Ambient Temperature:
See Table (c) and Table (d)
Process Temperature:
See Table (c) and Table (d)
Power Supply:
100 to 240 Va.c. (50/60 Hz) / 100 to 120 Vd.c.
24 Va.c. (50/60 Hz) / 24 Vd.c.
Um: 250 V
Current I/O: 4 to 20 mA, 32 Vd.c. max
Digital I/O: 30 Vd.c. max., 200 mA max

Flameproof with output IS circuit (Explosion Protection Code: NJ2)
Type of Gas Atmosphere Protection
Ex db eb ia [ia Ga] IIC T3…T6 Gb
Terminal Compartment: Ex db or Ex eb
Type of Dust Atmosphere Protection
Ex tb [ia Da] IIIC T75°C…T130°C Db

Enclosure: IP66/IP67, in accordance with GB 4208
Maximum Surface Temperature:
See Table (c) and Table (d)
Ambient Temperature:
See Table (c) and Table (d)
Process Temperature:
See Table (c) and Table (d)
Power Supply:
100 to 240 Va.c. (50/60 Hz) / 100 to 120 Vd.c.
24 Va.c. (50/60 Hz) / 24 Vd.c.
Electrical parameters:
Terminals: L/+, N/-
Um: 250 V
Terminals: Iout1 (+, -), Iout2 (+, -)
Ui: 30 V, Ii: 300 mA, Pi: 1.25 W, Ci: 4.84 nF, Li: 12μH
Terminals: P/Sout1 (+, -), P/Sout2 (+, -)
Ui: 30 V, Ii: 300 mA, Pi: 1.25 W, Ci: 14.6 nF, Li: 12μH

(Remote Sensor)
Flameproof (Explosion Protection Code: NF2)
Type of Gas Atmosphere Protection
Ex db eb ia IIC T3…T6 Gb
Type of Dust Atmosphere Protection
Ex tb IIIC T75°C…T150°C Db

Enclosure: IP66/IP67, in accordance with GB 4208
Maximum Surface Temperature:
See Table (c) and Table (d)
Ambient Temperature:
See Table (c) and Table (d)
Process Temperature:
See Table (c) and Table (d)
Um: 250 V

(Remote Transmitter)
Flameproof (Explosion Protection Code: NF2)
Type of Gas Atmosphere Protection
Ex db IIC T6 Gb
(Transmitter wiring terminal: M4 screw type)
Ex db IIC T6 Gb
Ex db eb IIC T6 Gb
(Transmitter wiring terminal: clamp type)
Type of Dust Atmosphere Protection
Ex tb IIIC T75°C Db

Enclosure: IP66/IP67, in accordance with GB 4208
Maximum Surface Temperature: T75°C
Ambient Temperature: -40°C to +60°C
Power Supply:
100 to 240 Va.c. (50/60 Hz) / 100 to 120 Vd.c.
24 Va.c. (50/60 Hz) / 24 Vd.c.
Current I/O: 4 to 20 mA, 32 Vd.c. max
Digital I/O:30 Vd.c. max, 200 mA max.

Flameproof with Intrinsically Safe output (Explosion Protection Code: NJ2)
Type of Gas Atmosphere Protection
Ex db [ia Ga] IIC T6 Gb
Ex db eb [ia Ga] IIC T6 Gb
Type of Dust Atmosphere Protection
Ex tb [ia Da] IIIC T75°C Db

Enclosure: IP66/IP67, in accordance with GB 4208
Maximum Surface Temperature: T75°C
Ambient Temperature:- 40°C to +60°C
Power Supply:
100 to 240 Va.c. (50/60 Hz) / 100 to 120 Vd.c.
24 Va.c. (50/60 Hz) / 24 Vd.c.
Electrical parameters:
Terminals: L/+, N/-
Um: 250 V
Terminals: Iout1 (+, -), Iout2 (+, -)
Ui: 30 V, Ii: 300 mA, Pi: 1.25 W, Ci: 4.84 nF, Li: 12 μH
Terminals: P/Sout1 (+, -), P/Sout2 (+, -)
Ui: 30 V, Ii: 300 mA, Pi: 1.25 W, Ci: 14.6 nF, Li: 12 μH

All Rights Reserved. Copyright © 2017, Yokogawa Electric Corporation

Table (c): Temperature Table (IECEx, FM (USA), Korea, INMETRO, EAC, NEPSI)

Model	Size	Process Connection	Lining	Temperature Table*1	
				Integral Flowmeter	Remote Sensor
AXG002, AXG005, AXG010, AXG015	2.5 to 15 mm (0.1 to 0.5 in.)	Wafer, Flange	PFA Lining	Table A	Table C
AXG025, AXG032, AXG040, AXG050, AXG065, AXG080, AXG100, AXG125	25 to 125 mm (1 to 5 in.)	Wafer, Flange	PFA Lining	Table B [Table I]*2	Table D [Table I]*2
AXG150, AXG200, AXG250, AXG300, AXG350, AXG400	150 to 400 mm (6 to 16 in.)	Wafer, Flange	PFA Lining	Table A	Table C
AXG015, AXG025, AXG032, AXG040, AXG050, AXG065, AXG080, AXG100, AXG125	15 to 125 mm (0.5 to 5 in.)	Clamp, Union, Butt Weld Joint	PFA Lining	Table E	Table F
AXG002, AXG005, AXG010, AXG015, AXG025, AXG040, AXG050, AXG080, AXG100, AXG150, AXG200	2.5 to 200 mm (0.1 to 8 in.)	Wafer	Ceramics Tube	Table G	Table H

*1: For details, see Table No. on Table (d).
*2: When process connection EA4 is specified, table specified inside [] is applied.
Process connection EA4 can be applicable for AXG025, AXG040, AXG050, AXG080 and AXG100.

Table (d): Temperature Table (IECEx, FM (USA), Korea, INMETRO, EAC, NEPSI)

Table No.	Ambient Temperature	Temperature Class	Maximum Surface Temperature	Process Temperature
A	-40°C to +60°C	T6	T75°C	-40°C to +75°C
		T5	T90°C	-40°C to +90°C
		T4	T120°C	-40°C to +120°C
		T3	T130°C	-40°C to +130°C
B	-40°C to +45°C	T6	T75°C	-40°C to +50°C
	-40°C to +60°C	T5	T90°C	-40°C to +75°C
		T4	T120°C	-40°C to +120°C
		T3	T130°C	-40°C to +130°C
C	-40°C to +60°C	T6	T75°C	-40°C to +75°C
		T5	T90°C	-40°C to +90°C
		T4	T120°C	-40°C to +120°C
		T3	T150°C	-40°C to +150°C
D	-40°C to +45°C	T6	T75°C	-40°C to +50°C
	-40°C to +60°C	T5	T90°C	-40°C to +75°C
		T4	T120°C	-40°C to +120°C
		T3	T150°C	-40°C to +150°C
E	-10°C to +45°C	T6	T75°C	-10°C to +50°C
	-10°C to +60°C	T5	T90°C	-10°C to +75°C
		T4	T120°C	-10°C to +120°C
		T3	T130°C	-10°C to +130°C
F	-10°C to +45°C	T6	T75°C	-10°C to +50°C
	-10°C to +60°C	T5	T90°C	-10°C to +75°C
		T4	T120°C	-10°C to +120°C
		T3	T150°C	-10°C to +150°C
G	-10°C to +60°C	T6	T75°C	-10°C to +75°C
		T5	T90°C	-10°C to +90°C
		T4	T120°C	-10°C to +120°C
		T3	T130°C	-10°C to +130°C
H	-10°C to +60°C	T6	T75°C	-10°C to +75°C
		T5	T90°C	-10°C to +90°C
		T4	T120°C	-10°C to +120°C
		T3	T150°C	-10°C to +150°C
I	-10°C to +60°C	T6	T75°C	-10°C to +75°C
		T5	T90°C	-10°C to +90°C
		T4	T120°C	-10°C to +100°C
		T3	T150°C	-10°C to +100°C

All Rights Reserved. Copyright © 2017, Yokogawa Electric Corporation

FM (Canada)

Applicable Standard:
CAN/CSA-C22.2 No. 0, CAN/CSA-C22.2 No. 0.4, C22.2 No. 0.5, C22.2 No. 25, C22.2 No. 30, C22.2 No. 94.2, CAN/CSA-C22.2 No. 61010-1, CAN/CSA-C22.2 No. 61010-2-030, C22.2 No. 60079-0, CAN/CSA-C22.2 No. 60079-7, CAN/CSA-C22.2 No. 60079-11, CAN/CSA-C22.2 No. 60079-18, ANSI/ISA-12.27.01

Certificate:
FM 17CA0076X

(Integral Flowmeter)

Explosionproof (Explosion Protection Code: CF2)

Explosionproof and Ignition Protected Apparatus for Class I, Division 1, Groups B, C and D.
Dust-Ignitionproof for Class II,III, Division 1, Groups E, F and G.
with Intrinsically Safe Electrodes for Class I, Division 1, Groups A, B, C and D.
Temperature Class T6…T3.

Enclosure: Type 4X
Ambient Temperature:
See Table (e) and Table (f).
Process Temperature:
See Table (e) and Table (f).
Power Supply:
100 to 240 Va.c. (50/60 Hz) / 100 to 120 Vd.c.
24 Va.c. (50/60 Hz) / 24 Vd.c.
Um: 250 V
Current I/O: 4 to 20 mA, 32 Vd.c. max.
Digital I/O: 30 Vd.c. max., 200 mA max.
Fieldbus I/O: 32 Vd.c. max., 15 mA max.
Modbus I/O: 5 Vd.c. typ.
Process Sealing: Dual seal
Primary Seal Failure Annunciation:
For the purpose of failure annunciation, the process fluid must be conductive.
If the Primary Seal fails, a significant change of impedance occurs between the electrodes and the housing.
This is detected as:
- significant decrease of the flow rate output signal when the process fluid is flowing; or
- unusual fluctuation of the flow rate output signal when the process fluid is not flowing.

Explosionproof with Intrinsically Safe output (Explosion Protection Code: CJ2)

Type of Protection:

Explosionproof and Ignition Protected Apparatus for Class I, Division 1, Groups B, C and D.
Dust-Ignitionproof for Class II,III, Division 1, Groups E, F and G.
with Intrinsically Safe Electrodes for Class I, Division 1, Groups A, B, C and D.
Associated Apparatus for Class I,II,III, Division 1, Groups A, B, C, D, E, F and G.
Temperature Class T6…T3.

Enclosure: Type 4X
Ambient Temperature:
See Table (e) and Table (f).
Process Temperature:
See Table (e) and Table (f).
Power Supply:
100 to 240 Va.c. (50/60 Hz) / 100 to 120 Vd.c.
24 Va.c. (50/60 Hz) / 24 Vd.c.
Electrical parameters:
Terminals: L/+, N/-
Um: 250 V
Terminals: Iout1 (+, -), Iout2 (+, -)
Ui: 30 V, Ii: 300 mA, Pi: 1.25 W, Ci: 4.84 nF, Li: 12 μH
Terminals: P/Sout1 (+, -), P/Sout2 (+, -)
Ui: 30 V, Ii: 300 mA, Pi: 1.25 W, Ci: 14.6 nF, Li: 12 μH
Process Sealing: Dual seal
Primary Seal Failure Annunciation:
For the purpose of failure annunciation, the process fluid must be conductive.
If the Primary Seal fails, a significant change of impedance occurs between the electrodes and the housing.
This is detected as:
- significant decrease of the flow rate output signal when the process fluid is flowing; or
- unusual fluctuation of the flow rate output signal when the process fluid is not flowing.

Explosionproof with Intrinsically Safe output for FOUNDATION Fieldbus / PROFIBUS PA (Explosion Protection Code: CT2)

Type of Protection:

Explosionproof and Ignition Protected Apparatus for Class I, Division 1, Groups B, C and D.
Dust-Ignitionproof for Class II,III, Division 1, Groups E, F and G.
with Intrinsically Safe Electrodes for Class I, Division 1, Groups A, B, C and D.
Associated Apparatus for Class I,II,III, Division 1, Groups A, B, C, D, E, F and G.
Temperature Class T6…T3.

Enclosure: Type 4X
Ambient Temperature:
See Table (e) and Table (f).
Process Temperature:
See Table (e) and Table (f).
Power Supply:
100 to 240 Va.c. (50/60 Hz) / 100 to 120 Vd.c.
24 Va.c. (50/60 Hz) / 24 Vd.c.
Electrical parameters:
Terminals: L/+, N/-
Um: 250 V
Terminals: Fieldbus (+, -)
FISCO field device or
Ui: 30 V, Ii: 380 mA, Pi: 5.32 W, Ci: 5 nF, Li: 10 μH
Terminals: P/Sout1 (+, -)
Ui: 30 V, Ii: 300 mA, Pi: 1.25 W, Ci: 14.6 nF, Li: 12 μH
Process Sealing: Dual seal
Primary Seal Failure Annunciation:
For the purpose of failure annunciation, the process fluid must be conductive.
If the Primary Seal fails, a significant change of impedance occurs between the electrodes and the housing.
This is detected as:
- significant decrease of the flow rate output signal when the process fluid is flowing; or
- unusual fluctuation of the flow rate output signal when the process fluid is not flowing.

All Rights Reserved. Copyright © 2017, Yokogawa Electric Corporation

(Remote Sensor)

Explosionproof (Explosion Protection Code: CF2)

Type of Protection:
Explosionproof and Ignition Protected Apparatus for Class I, Division 1, Groups B, C and D.
Dust-Ignitionproof for Class II,III, Division 1, Groups E, F and G.
with Intrinsically Safe Electrodes for Class I, Division 1, Groups A, B, C and D.
Temperature Class T6…T3.

Enclosure: Type 4X
Ambient Temperature:
See Table (e) and Table (f).
Process Temperature:
See Table (e) and Table (f).
Um: 250 V
Process Sealing: Dual seal
Primary Seal Failure Annunciation:
For the purpose of failure annunciation, the process fluid must be conductive.
If the Primary Seal fails, a significant change of impedance occurs between the electrodes and the housing.
This is detected as:
- significant decrease of the flow rate output signal when the process fluid is flowing; or
- unusual fluctuation of the flow rate output signal when the process fluid is not flowing.

(Remote Transmitter)

Explosionproof (Explosion Protection Code: CF2)

Type of Protection:
Explosionproof for Class I, Division 1, Groups A, B, C and D.
Dust-Ignitionproof for Class II,III, Division 1, Groups E, F and G.
Temperature Class T6.

Enclosure: Type 4X
Ambient Temperature: –40°C to +60°C
Power Supply:
100 to 240 Va.c. (50/60 Hz) / 100 to 120 Vd.c.
24 Va.c. (50/60 Hz) / 24 Vd.c.
Current I/O: 4 to 20 mA, 32 Vd.c. max.
Digital I/O: 30 Vd.c. max., 200 mA max.
Fieldbus I/O: 32 Vd.c. max., 15 mA max.
Modbus I/O: 5 Vd.c. typ.

Explosionproof with Output IS Circuit (Explosion Protection Code: CJ2)

Type of Protection:
Explosionproof for Class I, Division 1, Groups A, B, C and D.
Dust-Ignitionproof for Class II,III, Division 1, Groups E, F and G.
Associated Apparatus for Class I,II,III, Division 1, Groups A, B, C, D, E, F and G.
Temperature Class T6.

Enclosure: Type 4X
Ambient Temperature: –40°C to +60°C
Power Supply:
100 to 240 Va.c. (50/60 Hz) / 100 to 120 Vd.c.
24 Va.c. (50/60 Hz) / 24 Vd.c.
Electrical parameters:
Terminals: L/+, N/-
Um: 250 V
Terminals: Iout1 (+, -), Iout2 (+, -)
Ui: 30 V, Ii: 300 mA, Pi: 1.25 W, Ci: 4.84 nF, Li: 12 μH
Terminals: P/Sout1 (+, -), P/Sout2 (+, -)
Ui: 30 V, Ii: 300 mA, Pi: 1.25 W, Ci: 14.6 nF, Li: 12 μH

Explosionproof with Intrinsically Safe output for FOUNDATION Fieldbus / PROFIBUS PA (Explosion Protection Code: CT2)

Type of Protection:
Explosionproof for Class I, Division 1, Groups A, B, C and D.
Dust-Ignitionproof for Class II,III, Division 1, Groups E, F and G.
Associated Apparatus for Class I,II,III, Division 1, Groups A, B, C, D, E, F and G.
Temperature Class T6.

Enclosure: Type 4X
Ambient Temperature: –40°C to +60°C
Power Supply:
100 to 240 Va.c. (50/60 Hz) / 100 to 120 Vd.c.
24 Va.c. (50/60 Hz) / 24 Vd.c.
Electrical parameters:
Terminals: L/+, N/-
Um: 250 V
Terminals: Fieldbus (+, -)
FISCO field device or
Ui: 30 V, Ii: 380 mA, Pi: 5.32 W, Ci: 5 nF, Li: 10 μH
Terminals: P/Sout1 (+, -)
Ui: 30 V, Ii: 300 mA, Pi: 1.25 W, Ci: 14.6 nF, Li: 12 μH

All Rights Reserved. Copyright © 2017, Yokogawa Electric Corporation

Table (e): Temperature Table (FM (Canada))

Model	Size	Process Connection	Lining	Temperature Table*	
				Integral Flowmeter	Remote Sensor
AXG002, AXG005, AXG010, AXG015	2.5 to 15 mm (0.1 to 0.5 in.)	Wafer, Flange	PFA Lining	Table A	Table C
AXG025, AXG032, AXG040, AXG050, AXG065, AXG080, AXG100, AXG125	25 to 125 mm (1 to 5 in.)	Wafer, Flange	PFA Lining	Table B	Table D
AXG150, AXG200, AXG250, AXG300, AXG350, AXG400	150 to 400 mm (6 to 16 in.)	Wafer, Flange	PFA Lining	Table A	Table C
AXG015, AXG025, AXG032, AXG040, AXG050, AXG065, AXG080, AXG100, AXG125	15 to 125 mm (0.5 to 5 in.)	Clamp, Union, Butt Weld Joint	PFA Lining	Table E	Table F

*: For details, see Table No. on Table (f).

Table (f): Temperature Table (FM (Canada))

Table No.	Ambient Temperature	Temperature Class	Maximum Surface Temperature	Process Temperature
A	-40°C to +60°C	T6	T75°C	-40°C to +75°C
		T5	T90°C	-40°C to +90°C
		T4	T120°C	-40°C to +120°C
		T3	T130°C	-40°C to +130°C
B	-40°C to +45°C	T6	T75°C	-40°C to +50°C
	-40°C to +60°C	T5	T90°C	-40°C to +75°C
		T4	T120°C	-40°C to +120°C
		T3	T130°C	-40°C to +130°C
C	-40°C to +60°C	T6	T75°C	-40°C to +75°C
		T5	T90°C	-40°C to +90°C
		T4	T120°C	-40°C to +120°C
		T3	T150°C	-40°C to +150°C
D	-40°C to +45°C	T6	T75°C	-40°C to +50°C
	-40°C to +60°C	T5	T90°C	-40°C to +75°C
		T4	T120°C	-40°C to +120°C
		T3	T150°C	-40°C to +150°C
E	-10°C to +45°C	T6	T75°C	-10°C to +50°C
	-10°C to +60°C	T5	T90°C	-10°C to +75°C
		T4	T120°C	-10°C to +120°C
		T3	T130°C	-10°C to +130°C
F	-10°C to +45°C	T6	T75°C	-10°C to +50°C
	-10°C to +60°C	T5	T90°C	-10°C to +75°C
		T4	T120°C	-10°C to +120°C
		T3	T150°C	-10°C to +150°C

All Rights Reserved. Copyright © 2017, Yokogawa Electric Corporation

■ PERFORMANCE

Accuracy:

- **AXG Integral Flowmeter, or combination of AXG Remote Sensor and AXG4A Remote Transmitter (except optional code HF2)**

Size mm (in.)	Flow Velocity V m/s (ft/s)	Standard Accuracy (Accuracy Code B)
2.5 to 15 (0.1) (0.5)	V < 0.3 (1)	±1.0 mm/s
	0.3 ≤ V ≤ 10 (1) (33)	±0.3 % of rate
25 to 400 (1) (16)	V < 0.15 (0.5)	±0.5 mm/s
	0.15 ≤ V ≤ 10 (0.5) (33)	±0.3 % of rate

Size mm (in.)	Flow Velocity V m/s (ft/s)	High Grade Accuracy (Accuracy Code C)
25 to 200 (1) (8)	V < 0.15 (0.5)	±0.5 mm/s
	0.15 ≤ V < 1 (0.5) (3.3)	±0.18% of rate ± 0.2 mm/s
	1 ≤ V ≤ 10 (3.3) (33)	±0.15% of rate

Sizes 2.5 to 15 mm (0.1 to 0.5 in.)
Standard Accuracy (Accuracy Code B)

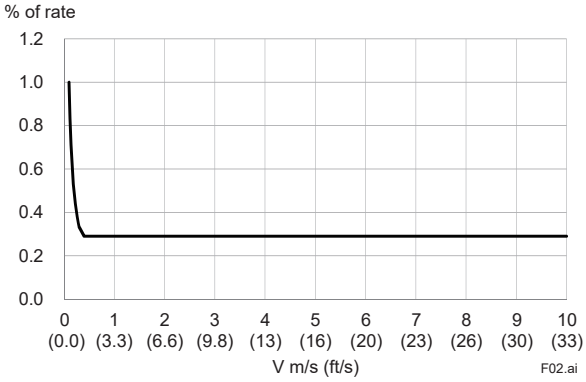

Sizes 25 to 400 mm (1 to 16 in.)
Standard Accuracy (Accuracy Code B)

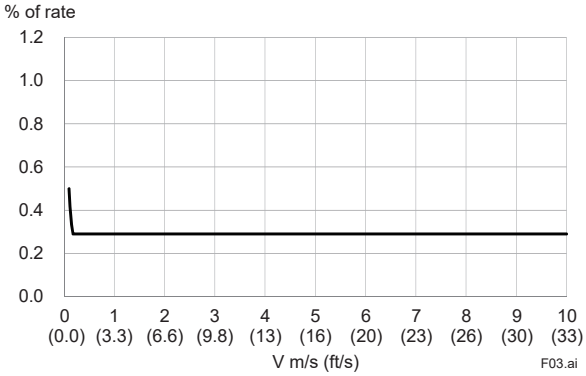

Sizes 25 to 200 mm (1 to 8 in.)
High Grade Accuracy (Accuracy Code C)

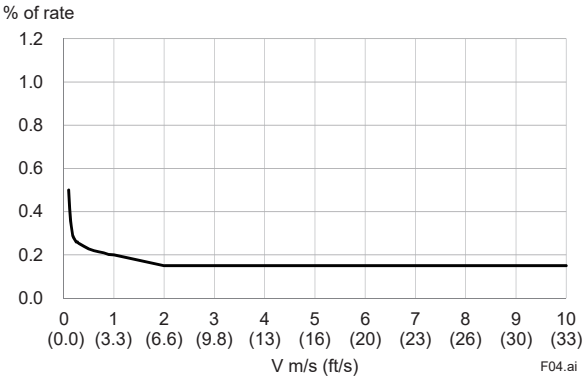

- **AXG Integral Flowmeter, or combination of AXG Remote Sensor and AXG1A Remote Transmitter (except optional code HF2)**

Size mm (in.)	Flow Velocity V m/s (ft/s)	Standard Accuracy (Accuracy Code B)
2.5 to 15 (0.1) (0.5)	V < 0.3 (1)	±1.0 mm/s
	0.3 ≤ V ≤ 10 (1) (33)	±0.3 % of rate
25 to 400 (1) (16)	V < 0.15 (0.5)	±0.5 mm/s
	0.15 ≤ V ≤ 10 (0.5) (33)	±0.3 % of rate
500 (20)	V < 0.3 (1)	±2.0 mm/s
	0.3 ≤ V ≤ 10 (1) (33)	±0.35% of rate ±1.0 mm/s

Size mm (in.)	Flow Velocity V m/s (ft/s)	High Grade Accuracy (Accuracy Code C)
25 to 200 (1) (8)	V < 0.15 (0.5)	±0.5 mm/s
	0.15 ≤ V < 1 (0.5) (3.3)	±0.18% of rate ± 0.2 mm/s
	1 ≤ V ≤ 10 (3.3) (33)	±0.15% of rate

- **Combination of AXG Remote Sensor and AXFA11 Remote Transmitter**

Size mm (in.)	Flow Velocity V m/s (ft/s)	Standard Accuracy (Accuracy Code B)
2.5 to 15 (0.1) (0.5)	V < 0.3 (1)	±1.0 mm/s
	0.3 ≤ V ≤ 10 (1) (33)	±0.35 % of rate
25 to 400 (1) (16)	V < 0.15 (0.5)	±0.5 mm/s
	0.15 ≤ V ≤ 10 (0.5) (33)	±0.35 % of rate
500 (20)	V < 0.3 (1)	±2.0 mm/s
	0.3 ≤ V ≤ 10 (1) (33)	±0.35% of rate ±1.0 mm/s

Size mm (in.)	Flow Velocity V m/s (ft/s)	High Grade Accuracy (Accuracy Code C)
25 to 200 (1) (8)	V < 0.15 (0.5)	±0.5 mm/s
	0.15 ≤ V < 1 (0.5) (3.3)	±0.18% of rate ± 0.2 mm/s
	1 ≤ V ≤ 10 (3.3) (33)	±0.2% of rate

All Rights Reserved. Copyright © 2017, Yokogawa Electric Corporation

Sizes 2.5 to 15 mm (0.1 to 0.5 in.)
with AXFA11 Standard Accuracy (Accuracy Code B)

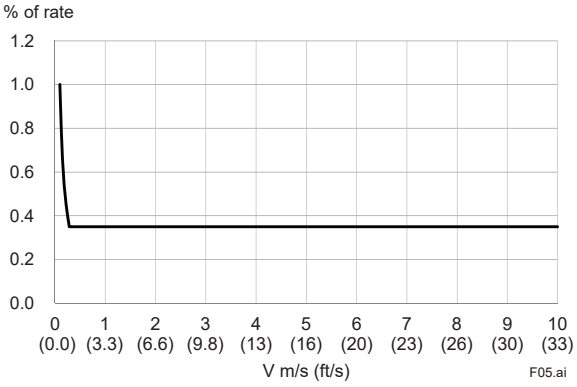

Sizes 25 to 400 mm (1 to 16 in.)
with AXFA11 Standard Accuracy (Accuracy Code B)

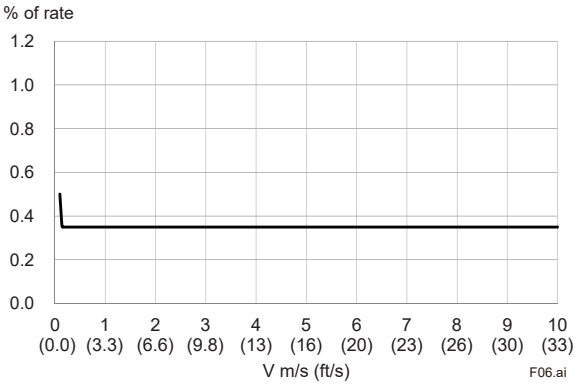

Size 500 mm (20 in.)
with AXFA11 Standard Accuracy (Accuracy Code B)

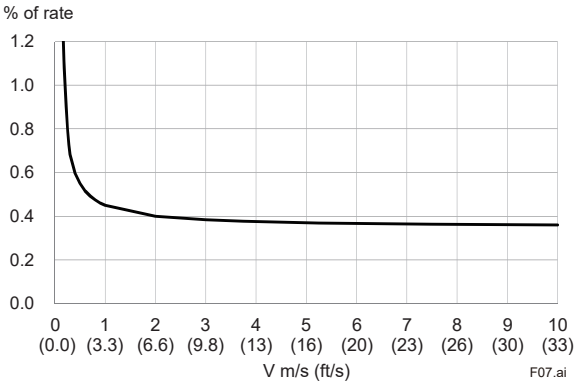

Sizes 25 to 200 mm (1 to 8 in.)
with AXFA11 High Grade Accuracy (Accuracy Code C)

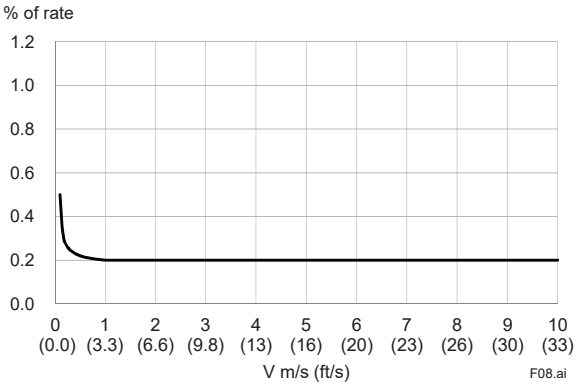

- **AXG Integral Flowmeter, combination of AXG Remote Sensor and AXG4A or AXG1A Remote Transmitter (combined with optional code HF2)**

Size mm (in.)	Flow Velocity V m/s (ft/s)	Standard Accuracy (Accuracy Code B)
25 to 200 (1) (8)	V < 0.15 (0.5)	±1.5 mm/s
	0.15 ≤ V ≤ 10 (0.5) (33)	±0.35% of rate ± 1 mm/s

Sizes 25 to 200 mm (1 to 8 in.)
Combined with optional code HF2

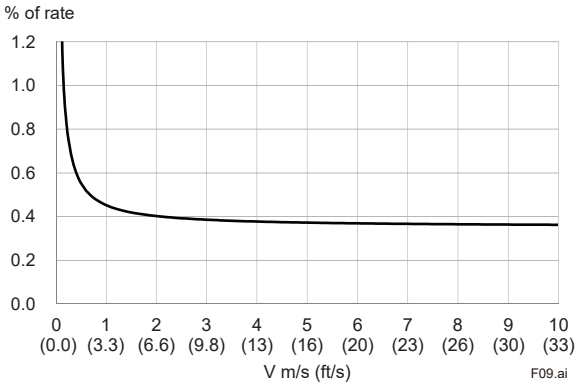

Note: The accuracy above is the result of calibration test at our water flow facility before shipment. It is defined by the integrated value of the pulse output. As for the current output accuracy, add ±8 μA (±0.05% of span) to the accuracy above. Calibration takes place at reference conditions as below.
Medium: Water
Density: 0.9 to 1.1 kg/l
Medium temperature: 10 to 35°C (50 to 95°F)
Ambient temperature: 10 to 35°C (50 to 95°F)
Reference Standards:
JIS B 7554, ISO 4185, ISO 5168, ISO 20456, BS EN 29104

Note: Refer to the table below for accuracy grades for export to China.

Size mm (in.)	Flow Velocity V m/s (ft/s)	Accuracy grade
2.5 to 15 (0.1) (0.5)	V < 0.3 (1)	Grade 1
	0.3 ≤ V ≤ 10 (1) (33)	Grade 0.5
25 to 300 (1) (12)	V ≤ 10 (33)	Grade 0.5

* No accuracy grade applies to size larger than 300 mm.
* When optional code HF2 is selected, the accuracy grade is not applicable.

Repeatability:

For size 2.5 mm (0.1 in.) to 400 mm (16 in.)
±0.1% of rate (Velocity 1 m/s (3.3 ft/s) or above)
±0.05% of rate ± 0.5 mm/s (Velocity below 1 m/s (3.3 ft/s))
Size 500 mm (20 in.)
± 0.2% of rate (Velocity 1 m/s (3.3 ft/s) or above)
± 0.1% of rate± 1 mm/s (Velocity below 1 m/s (3.3 ft/s))

Measurement Range:

Minimum Span Velocity: 0.1 m/s (0.33 ft/s)
0.5 m/s (1.64 ft/s) when option E21 is applied
Maximum Span Velocity: 10 m/s (33 ft/s)
Note: For details of span flow rate, read "Sizing Data", and "Ordering Information".

Power Consumption:

Integral Type: 13 W
Remote Type:
13 W (with AXG4A Remote Transmitter)
32 W (with AXG1A Remote Transmitter)
20 W (with AXFA11 Remote Transmitter)
Note: The power consumption is the same as above regardless of the communication and I/O type.

All Rights Reserved. Copyright © 2017, Yokogawa Electric Corporation

Insulation Resistance:

Integral Flowmeter:

Between power supply terminals and ground terminal:
100 MΩ/500 V DC

Between power supply terminals and input/output terminals:
100 MΩ/500 V DC

Between ground terminal and input/output terminals:
20 MΩ/100 V DC or 125 V DC

Between input/output terminals*:
20 MΩ/100 V DC or 125 V DC

*: Not applicable for I/O3 and I/O4+ of Modbus

Remote Sensor:

Between signal terminals*:
100 MΩ/500 V DC

Between signal terminals and common terminal*:
100 MΩ/500 V DC

*: Not applicable for Explosion protection type

Between excitation current terminal and signal / common terminals:
100 MΩ/500 V DC

Remote Transmitter:

Between power supply terminals and ground terminal:
100 MΩ/500 V DC

Between power supply terminals and input/output or excitation current terminals:
100 MΩ/500 V DC

Between ground terminal and input/output or excitation current terminals:
20 MΩ/100 V DC or 125 V DC

Between input/output* and excitation current terminals:
20 MΩ/100 V DC or 125 V DC

*: Not applicable for I/O3 and I/O4+ of Modbus

Withstand Voltage:

Integral Flowmeter:

Between power supply terminals and ground terminal:
1400 V AC for 2 seconds

Between power supply terminals and input/output terminals:
1400 V AC for 2 seconds

Remote Sensor (Optional code WT1):

Between excitation current terminal and ground terminal:
1000 V AC for 1 minute

Remote Sensor (Optional code WT2):

Between excitation current terminal and ground terminal:
1500 V AC for 1 minute

Between signal terminals and excitation current terminal:
1500 V AC for 1 minute

Remote Sensor (Explosion protection type):

Between excitation current terminal and ground terminal:
1500 V AC for 1 minute, or 1800 V AC for 0.2 second

Between signal terminals and excitation current terminal:
1500 V AC for 1 minute, or 1800 V AC for 0.2 second

Remote Transmitter:

Between power supply terminals and ground terminal:
1400 V AC for 2 seconds

Between power supply terminals and input/output terminals:
1400 V AC for 2 seconds

Between excitation current terminal and ground terminal:
160 V AC for 2 seconds

Between excitation current terminal and input/output terminals:
350 V AC for 2 seconds

■ NORMAL OPERATING CONDITIONS

Ambient Temperature:

–40 to 60°C (–40 to 140°F)

Note: Minimum value is limited according to minimum fluid temperature of sensor's specification. Read “Fluid Temperature and Pressure”.
Display operating range is –20 to 60°C (–4 to 140°F).
Refer to the HAZARDOUS AREA CLASSIFICATION for Explosion protection type.

Ambient Humidity:

0 to 100%

Note: Lengthy continuous operation at 95% or more is not recommended.

Power Supply:

Power Supply Code 1:

AC Type:
Rated Power Supply: 100 to 240 V AC, 50/60 Hz
Operating Voltage Range: 80 to 264 V AC

DC Type:
Rated Power Supply: 100 to 120 V DC
Operating Voltage Range: 90 to 130 V DC

Power Supply Code 2:

AC Type:
Rated Power Supply: 24 V AC, 50/60 Hz
Operating Voltage Range: 20.4 to 28.8 V AC

DC Type:
Rated Power Supply: 24 V DC
Operating Voltage Range: 20.4 to 28.8 V DC

Supply Voltage and Power Supply Cable Length for Power Supply Code 2:

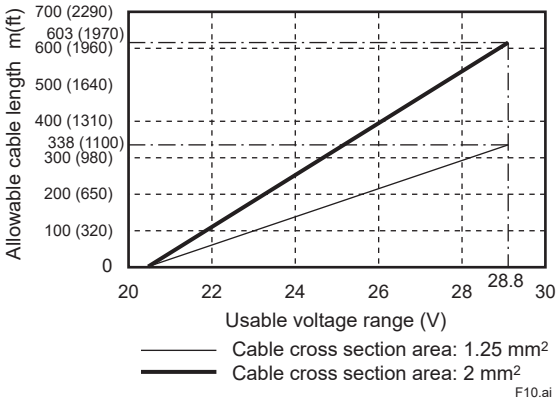

Note: For AXG1A remote transmitter, read general specifications (GS 01E22C01-01EN).

Fluid Conductivity:

Size 2.5 to 10 mm (0.1 to 0.4 in.): 5 μS/cm or larger
Size 15 to 125 mm (0.5 to 5 in.): 1 μS/cm or larger
Size 150 to 400 mm (6 to 16 in.): 3 μS/cm or larger
Size 500 mm (20 in.): 20 μS/cm or larger

Note: For measuring low conductivity fluids, read "Cautions on Selection and Installation".

All Rights Reserved. Copyright © 2017, Yokogawa Electric Corporation

Signal Cable Length and Fluid Conductivity (Remote Sensor):

Sizes 2.5 to 10 mm (0.1 to 0.4 in.)

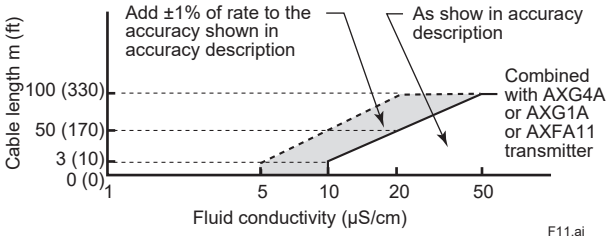

Sizes 15 to 125 mm (0.5 to 5 in.)

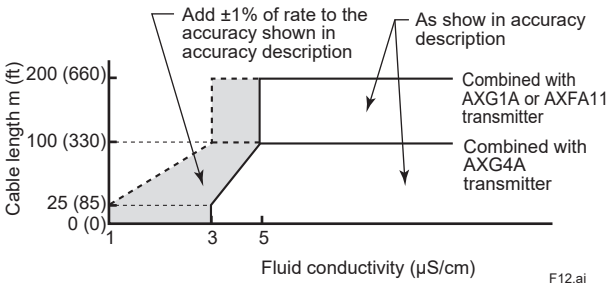

Sizes 150 to 400 mm (6 to 16 in.)

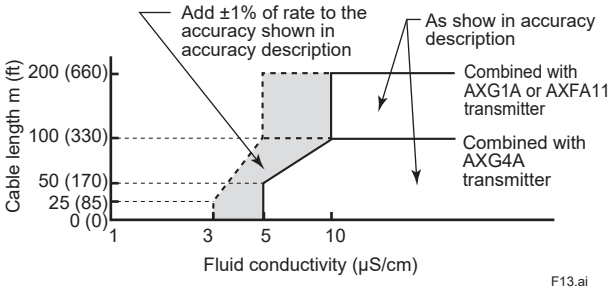

Size 500 mm (20 in.)

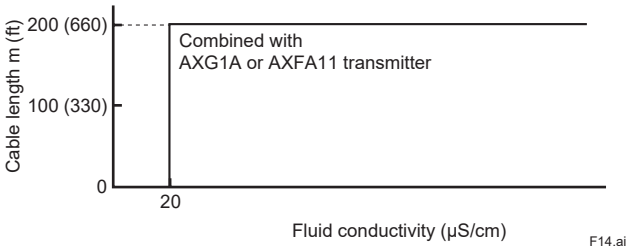

Fluid Temperature and Pressure:

The following figure shows the usable temperature and pressure range of the sensor in each specification. It is also limited by the flange pressure rating of the process connection.
For fluid temperature of the Explosion Protection, read descriptions of “Explosion Protection”.

PFA Lining, Remote Sensor (excluding high pressure type (ASME Class 600 flange) and Hygienic)

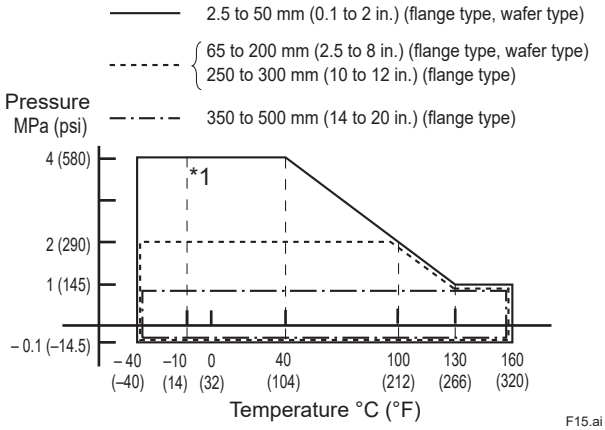

PFA Lining, Integral Flowmeter (excluding high pressure type (ASME Class 600 flange), and Hygienic)

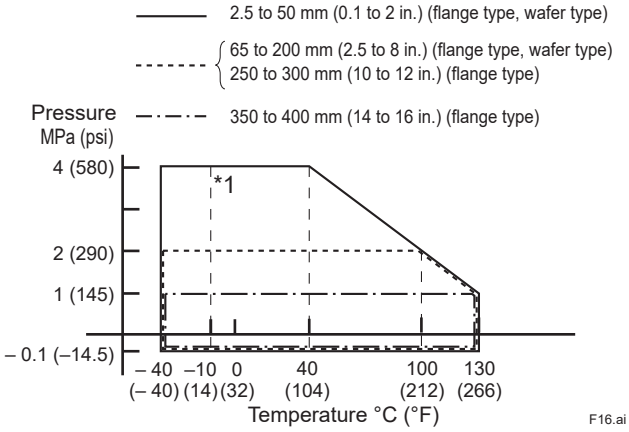

*1: For wafer types of 150 to 200 mm (6 to 8 in.) or carbon steel flange types (process connection code: C##) of 50 to 500 mm (2 to 20 in.), the minimum temperature is –10°C (14°F).

All Rights Reserved. Copyright © 2017, Yokogawa Electric Corporation

PFA Lining, Remote Sensor and Integral Flowmeter (high pressure type (ASME Class 600 flange))

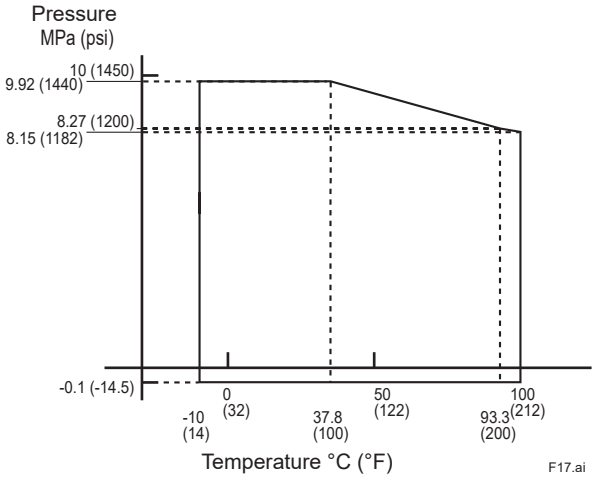

PFA Lining, Remote Sensor and Integral Flowmeter (Hygienic)

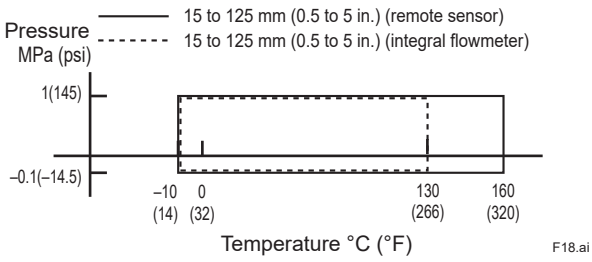

Note: For fluid temperature of 120°C (248°F) or more (Maximum: 160°C (320°F)), select optional code GH.

Ceramics Tube, Remote Sensor

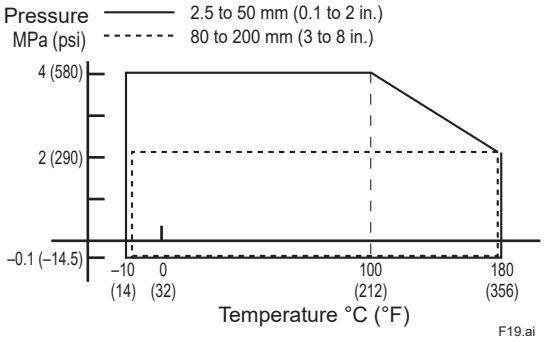

Ceramics Tube, Integral Flowmeter

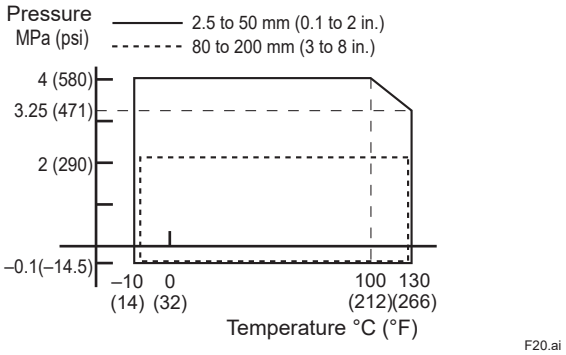

Thermal Shock Temperature and Flow Velocity of Ceramics Tube:

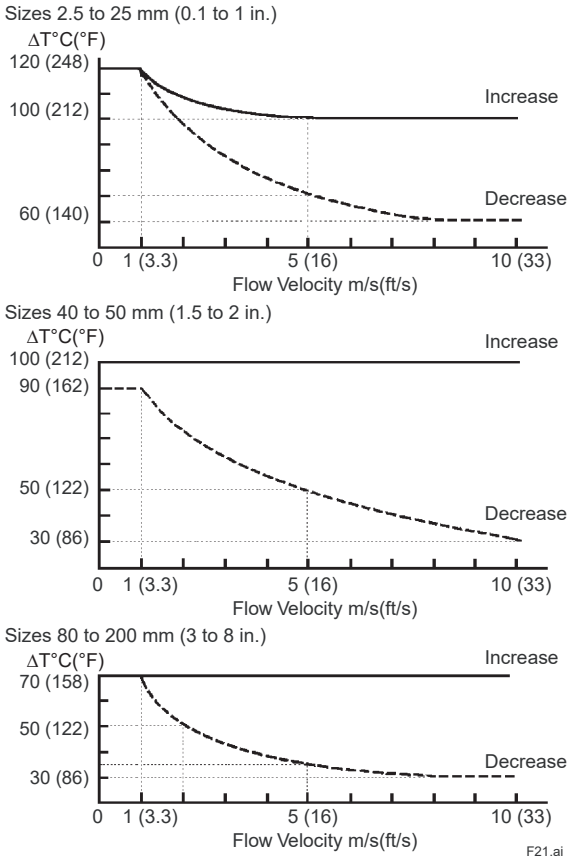

"Decrease" means that the temperature of a measured fluid drops rapidly, while "Increase" means that the temperature rises rapidly. The maximum allowable ranges in both cases are indicated by the curves shown in the diagrams, with the solid line indicating the maximum increase, and the broken line the maximum decrease.

ΔT: Change in temperature of measured fluid in one second

Flow velocity: Flow velocity of the measured fluid

Allowable Conditions for Cleaning Lining (Hygienic, and Hygienic Explosion Protection):

Steam or hot water cleaning:

Max. temp. 150°C (302°F), time period 60 minutes or less

- When Use code -H (Hygienic) with Construction code D/E/G (Remote sensor) is specified, it can be cleaned at Max. temp 160°C (320°F).
- When Use code -J (Hygienic Explosion Protection) is specified, clean after the power is turned off.

Vibration Conditions:

Integral Flowmeter:

19.6 m/s^2 - rms (5 to 2000 Hz)

Remote Sensor:

34.3 m/s^2 - rms (5 to 2000 Hz)

Remote Transmitter:

19.6 m/s^2 - rms (5 to 2000 Hz)

Note: Vibration conditions are based on IEC 60068-2-64. Avoid installation in a place with much vibration (vibration frequency 2000 Hz or more). It may cause damage to the device.

All Rights Reserved. Copyright © 2017, Yokogawa Electric Corporation

■ CAUTIONS ON SELECTION AND INSTALLATION

Combined Transmitter:

In the following cases, combine with AXG1A or AXFA11G remote transmitter. If it is considered that the flow noise in the fluid could be large because of low conductivity, or high concentration slurry, etc. and the size is 250 mm (10 in.) or more, it is recommended to combine with AXG1A or AXFA11G remote transmitter.

· When mounting remote transmitter to wall or panel
· When cable length exceeds 100 m
· When using 5 or more input/output terminals

Wiring:

For the power code (-1 100-240 V AC / 100 - 120 V DC), don't bundle the power supply wire and other signal wire into the same wiring port.

Lining:

PFA Lining:

It is excellent in chemical resistance. We adopt the material approved by FDA (US Food and Drug Administration).

Ceramics Tube:

It is excellent in chemical resistance, heat resistance and abrasion resistance. Measuring pipe sintered with high purity alumina ceramics is a structure that also serves as a lining.

Grounding Device:

The grounding device can be selected as an optional specification. It is unnecessary to use it for metal piping which has no lining. In that case, connect the piping and the sensor flange part (mini-flange or one-piece casting structured measuring pipe for wafer type) with grounding wire supplied by customer (see the figure below). Be sure to select the grounding device when installed at plastic or lining piping.

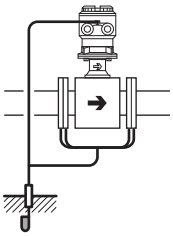

F22.ai

There are thin type (thickness 1 to 2 mm) and thick type (thickness 3 to 4 mm, or 8.5 to 10.5 mm for high pressure type) for grounding rings. If the flange is ASME Class 300, EN PN 40 etc. for high fluid pressure and the tightening torque is high, the thick type is recommended.

Grounding ring (electrode type) and built-in grounding electrode can not be used for permeable fluid (e.g. nitric acid, hydrofluoric acid, high temperature sodium hydroxide etc.).

The built-in grounding electrode (for sizes 150 to 400 mm, 6 to 16 in.) has fewer seals against fluid than the grounding ring, so leakage possibility will be less if the installed piping is plastic or lining one.

All Rights Reserved. Copyright © 2017, Yokogawa Electric Corporation

Recommended Gasket (for installed piping flange):

Use compressed non-asbestos joint sheet gaskets, PTFE-sheathed non-asbestos joint sheet gaskets or gaskets which have equivalent elasticity. When selecting optional code GA, GC, or GD for plastic piping, use rubber gaskets or ones which have equivalent elasticity (such as PTFE-sheathed rubber gaskets).
Dimensions of the gasket should be determined with reference to the following table (by process connection and lining) and figure. If the inner diameter of the gasket is too large or the outer diameter is too small, liquid leakage may occur.

Unit: mm

Size	PFA Lining										Ceramics Tube				
	Wafer					Flange					Wafer				
	Inner Diameter for Effective Sealing [øA]	Outer Diameter for Effective Sealing [øB]	Recommended Inner Diameter of Gasket		Minimum Inner Diameter of Gasket*2	Inner Diameter for Effective Sealing [øA]	Outer Diameter for Effective Sealing [øB]	Recommended Inner Diameter of Gasket		Minimum Inner Diameter of Gasket*2	Inner Diameter for Effective Sealing [øA]	Outer Diameter for Effective Sealing [øB]	Recommended Inner Diameter of Gasket		Minimum Inner Diameter of Gasket*2
			Flat Gasket [øC]	PTFE-sheathed Gasket [øD]				Flat Gasket [øC]	PTFE-sheathed Gasket [øD]				Flat Gasket [øC]	PTFE-sheathed Gasket [øD]	
2.5	15	38	17	22	15	15	30	17 [15]*1	22 [19]*1	15	—	—	—		—
5	15	38	17	22	15	15	30	17 [15]*1	22 [19]*1	15	—	—	—		—
10	15	38	17	22	15	15	30	17 [15]*1	22 [19]*1	15	—	—	—		—
15	18	38	22		15	22	34	22		15	15	33	22		15
25	32	54	35		28	35	54	35		29	27	50	35		27
32	37	58	43		34	40	64	43		34	—	—	—		—
40	45	71	49		41	48	72	49		41	40	68	49		40
50	58	84	61		53	61	89	61		53	52	82	61		52
65	69	103	84		66	72	108	84		66	—	—	—		—
80	81	114	90		81	85	119	90		81	81	112	90		81
100	106	140	115		102	110	146	115		102	98	134	115		98
125	131	165	141		128	136	173	141		128	—	—	—		—
150	164	190	167		147	164	209 {216}*1	167		150	144	188	167		144
200	218	240	218		199	218	259 {272}*1	218		201	192	240	218		192
250	—	—	—		—	270	320 {332}*1	270		250	—	—	—		—
300	—	—	—		—	321	367 {392}*1	321		301	—	—	—		—
350	—	—	—		—	350	412	359		330	—	—	—		—
400	—	—	—		—	401	475	410		381	—	—	—		—
500	—	—	—		—	581	581 <606>*1	513		465	—	—	—		—

Unit: inch

Size	PFA Lining										Ceramics Tube				
	Wafer					Flange					Wafer				
	Inner Diameter for Effective Sealing [øA]	Outer Diameter for Effective Sealing [øB]	Recommended Inner Diameter of Gasket		Minimum Inner Diameter of Gasket*2	Inner Diameter for Effective Sealing [øA]	Outer Diameter for Effective Sealing [øB]	Recommended Inner Diameter of Gasket		Minimum Inner Diameter of Gasket*2	Inner Diameter for Effective Sealing [øA]	Outer Diameter for Effective Sealing [øB]	Recommended Inner Diameter of Gasket		Minimum Inner Diameter of Gasket*2
			Flat Gasket [øC]	PTFE-sheathed Gasket [øD]				Flat Gasket [øC]	PTFE-sheathed Gasket [øD]				Flat Gasket [øC]	PTFE-sheathed Gasket [øD]	
0.1	0.59	1.50	0.67	0.87	0.59	0.59	1.18	0.67 [0.59]*1	0.87 [0.75]*1	0.59	—	—	—		—
0.2	0.59	1.50	0.67	0.87	0.59	0.59	1.18	0.67 [0.59]*1	0.87 [0.75]*1	0.59	—	—	—		—
0.4	0.59	1.50	0.67	0.87	0.59	0.59	1.18	0.67 [0.59]*1	0.87 [0.75]*1	0.59	—	—	—		—
0.5	0.71	1.50	0.87		0.59	0.87	1.34	0.87		0.59	0.59	1.30	0.87		0.59
1.0	1.26	2.13	1.38		1.10	1.39	2.13	1.38		1.14	1.06	1.97	1.38		1.06
1.25	1.46	2.28	1.69		1.34	1.59	2.53	1.69		1.34	—	—	—		—
1.5	1.76	2.80	1.93		1.61	1.89	2.83	1.93		1.61	1.57	2.68	1.93		1.57
2.0	2.26	3.31	2.40		2.09	2.39	3.50	2.40		2.09	2.05	3.23	2.40		2.05
2.5	2.73	4.06	3.31		2.60	2.84	4.25	3.31		2.60	—	—	—		—
3.0	3.19	4.49	3.54		3.19	3.33	4.69	3.54		3.19	3.19	4.41	3.54		3.19
4.0	4.19	5.51	4.53		4.02	4.34	5.75	4.53		4.02	3.86	5.28	4.53		3.86
5.0	5.14	6.50	5.55		5.04	5.34	6.81	5.55		5.04	—	—	—		—
6.0	6.46	7.48	6.57		5.79	6.46	8.23 {8.50}*1	6.57		5.91	5.67	7.40	6.57		5.67
8.0	8.58	9.45	8.58		7.83	8.58	10.20 {10.71}*1	8.58		7.91	7.56	9.45	8.58		7.56
10	—	—	—		—	10.61	12.60 {13.07}*1	10.63		9.84	—	—	—		—
12	—	—	—		—	12.64	14.44 {15.43}*1	12.64		11.85	—	—	—		—
14	—	—	—		—	13.76	16.22	14.13		12.99	—	—	—		—
16	—	—	—		—	15.78	18.70	16.14		15.00	—	—	—		—
20	—	—	—		—	22.87	22.87 <23.86>*1	20.20		18.31	—	—	—		—

*1: The value varies depending on the selection of process connection code:
DJ1, DJ2, DE4: Values in [ ].
BA2, BJ2, CA2, CJ2, PA2: Values in { }.
BE2, CE2: Values in < >.

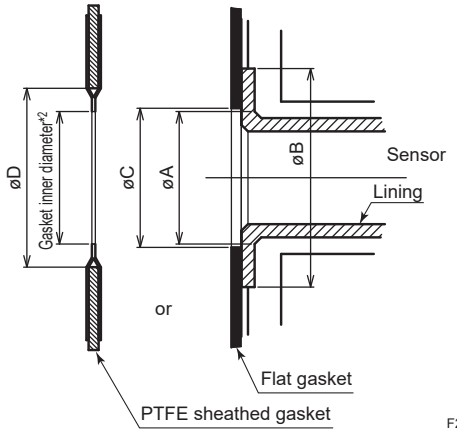

*2: To prevent the gasket from protruding into the flow path, make sure that this length is smaller than the minimum inner diameter of the gasket in the table.

All Rights Reserved. Copyright © 2017, Yokogawa Electric Corporation

For high pressure type (ASME Class 600 flange), use a flat gasket that matches the outer diameter and inner diameter of the grounding ring considering the dimensions of the seal structure of the flange. Do not use a spiral wound gasket. Also, be careful not to damage the flange surface of the sensor by excessive tightening. The structural figure of grounding ring with flange and the dimensions of inner and outer diameter of the grounding ring are shown below. Note that the grounding ring must be selected for high pressure type.

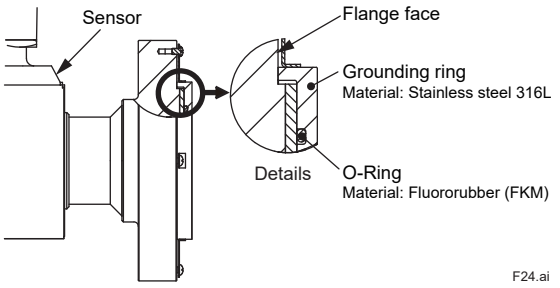

Grounding Rings for High Pressure Type

Unit: mm (approx. in.)

Size	Outer Diameter	Inner Diameter
25 (1)	69 (2.72)	29.0 (1.14)
40 (1.5)	92 (3.62)	35.4 (1.39)
50 (2)	108 (4.25)	46.5 (1.83)
80 (3)	147 (5.79)	70.9 (2.79)
100 (4)	185 (7.28)	93.0 (3.66)

Noise Avoidance:

The flowmeter should be installed away from electrical motors, transformers, and other power sources in order to avoid interference with measurement. When installing two or more magnetic flowmeters, provide a distance of at least 5D (D is size of model code) each other. If diameters of them are different, let D be the larger one.

Mounting of Flowmeters and Required Straight Pipe Length:

Based on JIS B 7554 “Magnetic Flowmeters” and our piping condition test data, we recommend the piping conditions as shown in the following figures. This is not always enough when the piping line incorporates multiple conditions at the same time.

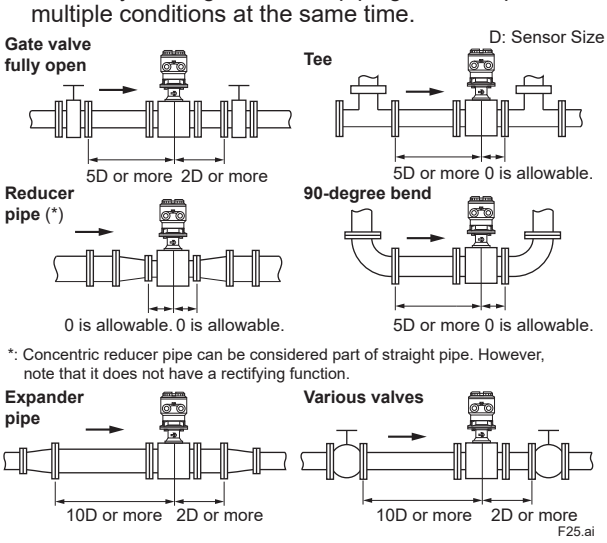

Required Straight Pipe Length

- Do not install anything in the vicinity that may interfere with the magnetic field, induced signal voltages, or flow velocity distributions of the flowmeter.
- A straight run may not be required on the downstream side of the flowmeter. However, if a downstream valve or other fitting causes irregularity or deviation in flows, provide a distance of 2D to 3D on the downstream side.
- The valves shall be mounted on the downstream side so that deviated flows do not occur in the sensor and to avoid startup from an empty condition.
- In case the piping conditions are compounded, install on the straight pipe section where the upstream part is sufficiently rectified.

Maintaining Stable Fluid Conductivity:

Do not install the flowmeter where fluid conductivity tends to become uneven. If chemicals are fed near the upstream side of a magnetic flowmeter, they may affect the flow-rate’s indications. To avoid this situation, it is recommended that the chemical feed ports be located on the downstream side of the flowmeter. If it is unavoidable that chemicals must be fed on the upstream side, provide a sufficient straight pipe length (approximately 50D or more) to ensure the proper mixture of fluids.

Low Conductivity Fluid:

When used for fluids with high flow noise (pure water, low viscosity and low conductivity fluid such as alcohols), the output fluctuation increases and the measurement is affected. In that case, using the Magnetic flowmeter CA Series, vortex flowmeter, or Coriolis flowmeter is recommended.

Permeable Fluid:

For use with permeable fluid (e.g. nitric acid, hydrofluoric acid, high-temperature sodium hydroxide, etc.), selecting a model with PFA lining, vent hole (optional code H), and grounding ring plate (thick type)(optional code GRN, GRJ, or GRW), or the Magnetic flowmeter CA Series is recommended.

Adhesive Fluid of Insulator:

When measuring adhesive fluid of insulator, selecting mirror finished PFA lining or ceramics tube (optional code PM or CM), or the Magnetic flowmeter CA Series is recommended. Those help reduce the adhesion on the inner surface of the pipe.

Abrasive Slurry Fluid:

For abrasive slurry fluids mixed with minerals, earth and sand etc., install on vertical piping. This reduces uneven wear of the lining. For sizes 200 mm (8 in.) or less, the AXG magnetic flowmeter with ceramics tube, the Magnetic flowmeter CA Series, or the AXW magnetic flowmeter with natural soft rubber lining is recommended.

All Rights Reserved. Copyright © 2017, Yokogawa Electric Corporation

Mounting Positions:

- Pipes must be fully filled with liquids.
  It is essential that pipes remain fully filled at all times, otherwise flow rate indications may be affected and measurement errors may be caused.
  Piping shall be designed so as to maintain the sensor filled with fluids.
  Vertical mounting is effective in such cases as when fluids tend to separate or solid matter may be precipitated. When employing vertical mounting, direct the fluids from the bottom to the top to ensure that the pipes remain fully filled.

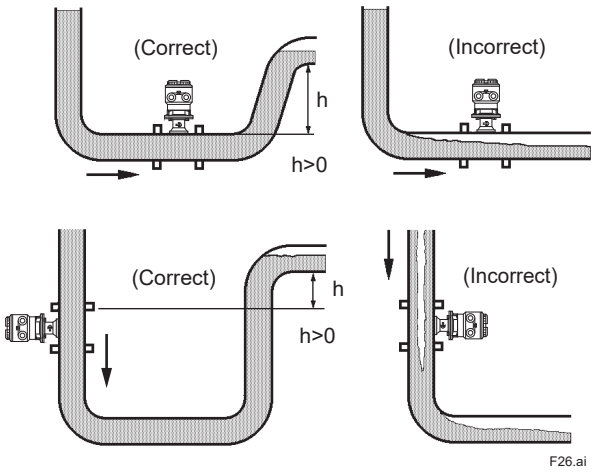

Mounting Positions

- Avoiding Air Bubbles.
  If air bubbles enter a measurement pipe, flow rate indications may be affected and measurement errors may be caused.
  In cases where fluids contain air bubbles, piping must be designed to prevent them from accumulating in the measurement pipe of a sensor.
  If a valve exists near the sensor, try to mount the sensor on the valve's upstream side in order to prevent a possible reduction of pressure inside the pipe, thereby avoiding the possibility of air bubbles.

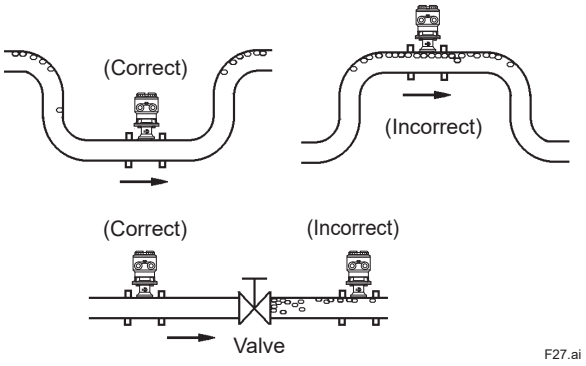

Avoiding Air Bubbles

Mounting Orientation:

Install the magnetic flowmeter so that the electrodes position is not perpendicular to the ground. Otherwise it may cause the measuring errors because air bubbles at upper side or slurry at downside covers the electrode.
Mount the terminal box of a remote sensor and the transmitter of an integral flowmeter above the piping to prevent water from entering them.

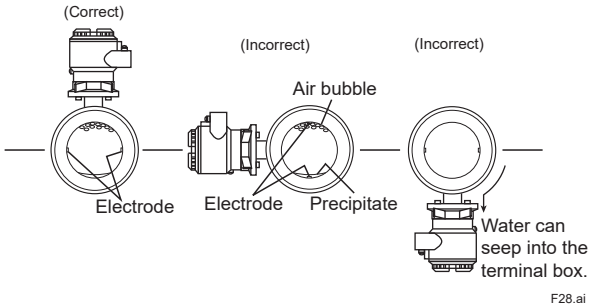

Mounting Orientation

Counter Flange Material:

For some specifications of the wafer type flowmeters (see the table), if carbon steel flange is used on the user-side to connect the flowmeter, a measurement error will be added to the guaranteed accuracy in this General Specifications. By setting the correction factor provided from us, it is possible to reduce the added measurement error to around ±0.5%. If you want to avoid the measurement error caused by using carbon steel for the user-side flange, select the flange type.

Size	40 mm, 50 mm, 65 mm, 80 mm, 100 mm, 125 mm
Process Connection	A□□: Wafer Type
Lining	A: PFA Lining

* This does not apply to products that include the following specifications.
Gasket for plastic piping (/GA, /GC, /GD)
Size of 40 mm, 50 mm, 65 mm using grounding ring electrode (/GRP, /GRT)

All Rights Reserved. Copyright © 2017, Yokogawa Electric Corporation

■ MODEL AND SUFFIX CODE

Note:

1: There are some limitations on the combination of specifications. Read specification code table when selecting specification code.

2: For both wafer and flange type of 2.5 to 10 mm (0.1 to 0.4 in.), prepare 15 mm (0.5 in.) diameter nominal flanges on the process pipe side. However, for the flanges EN PN40, JIS 10K, JIS 20K, types for the nominal diameter 10 mm (0.4 in.) flange can also be selected (Process Connection Code DE4, DJ1, and DJ2).
The process connection of ceramics tube sizes 2.5 to 10 mm (0.1 to 0.4 in.) is only Union Joint (Screw and Welding type).

3: For EN standard wafer and flange type of sizes 2.5 to 50 mm (0.1 to 2 in.), select PN40 even for lower pressure rating because the dimensions of mating faces for PN10, 16, and 40 are the same.
For EN standard wafer and flange type of sizes 65 to 150 mm (2.5 to 6 in.), select PN16 even for lower pressure rating because the dimensions of mating faces for PN10 and 16 are the same.

4: The dimensions of mating faces are based on the following flange standards.
JIS F12: JIS G 3443-2, JIS 10K, 20K: JIS B 2220 and JIS G 3443-2,
ASME: ASME B 16.5, EN: EN 1092-1, JPI: JPI-7S-15, AS: AS2129
Each flange standard has the specifications for the limitation on the available fluid temperature and pressure as well as the dimensions. Be sure that user's fluid conditions meet the specifications of each flange standard when selecting a process connection code.

5: The grounding device is selectable from none, grounding ring, or built-in grounding electrode. When selecting the grounding ring or the built-in grounding electrode, it is also necessary to select its type (material etc.) from the optional codes.

6: The lay length (face to face) of the flange type of PFA lining sizes 15 to 400 mm (0.5 to 16 in.) conforms to ISO standard (ISO 20456) except for ASME Class 600 flange high pressure type. The lay length for ceramics tube (wafer and union joint) and Hygienic are the same as those of the conventional model ADMAG AXF series (AXF standard lay length). The lay length depends on the presence or absence of the optional grounding rings or gaskets, so see the Dimensional Drawings.

7: ⚠Lining, electrode, pipe connection adapter (for Hygienic, or Hygienic Explosion Protection), and grounding device (grounding ring plate, metal hat grounding ring, grounding ring electrode, built-in grounding electrode) are wetted parts.
Users must consider the characteristics of selected wetted parts material and influence of process fluids. The use of inappropriate materials can result in the leakage of corrosive process fluids and cause injury to personnel and/or damage to plant facilities. It is also possible that the instrument itself can be damaged and that fragments from the instrument can contaminate the user's process fluids. Be very careful with highly corrosive process fluids such as hydrochloric acid, sulfuric acid, hydrogen sulfide, sodium hypochlorite, and high-temperature steam (150°C [302°F] or above). Contact Yokogawa for detailed information of the wetted parts material.

8: In the case of remote sensor, select "None (or Without)" for each specification code of "Power Supply", "Communication and I/O", "Transmitter Wiring Terminal" and "Display".

9: Select appropriate equipment in accordance with the laws and regulations of the relevant country/region, when it is used in a location where explosive atmospheres may be present.
In the case that final destination is Taiwan or UAE and the explosion type is required, select IECEx explosion protection type.

10: Wafer type replacement model has the lay length compatible with previous models (ADMAG, YEWMAG series) by attaching grounding rings for wafer type replacement model(optional code GAN) to integral flow meter or remote sensor. For details on dimensions, please refer to the DIMENSIONAL DRAWINGS.

11: For wafer types with sizes ranging from 2.5 to 15 mm, the lay length of previous models (ADMAG and YEWMAG series) is the same as when grounding rings with optional codes GRN, GRP, and GRT are selected for the AXG standard lay length type. For details on dimensions, please refer to the the DIMENSIONAL DRAWINGS.

12: In China, when using magnetic flowmeters for pressure piping, the optional code /TS1 or /TS2 must be selected . When placing an order, please confirm the grade of the pressure piping (either GC1 or GC2) and select the optional code /TS1 or /TS2.

All Rights Reserved. Copyright © 2017, Yokogawa Electric Corporation

●General-purpose, Submersible, Explosionprotection, Wafer, Flange, PFA Lining (2.5 to 400 mm/0.1 to 16 in.)

Model	Suffix Code	Description	Limitation
AXG002		Magnetic Flowmeter (2.5 mm/0.1 in)	
AXG005		Magnetic Flowmeter (5 mm/0.2 in)	
AXG010		Magnetic Flowmeter (10 mm/0.4 in)	
AXG015		Magnetic Flowmeter (15 mm/0.5 in)	
AXG025		Magnetic Flowmeter (25 mm/1 in)	
AXG032		Magnetic Flowmeter (32 mm/1.25 in)	
AXG040		Magnetic Flowmeter (40 mm/1.5 in)	
AXG050		Magnetic Flowmeter (50 mm/2 in)	
AXG065		Magnetic Flowmeter (65 mm/2.5 in)	
AXG080		Magnetic Flowmeter (80 mm/3 in)	
AXG100		Magnetic Flowmeter (100 mm/4 in)	
AXG125		Magnetic Flowmeter (125 mm/5 in)	
AXG150		Magnetic Flowmeter (150 mm/6 in)	
AXG200		Magnetic Flowmeter (200 mm/8 in)	
AXG250		Magnetic Flowmeter (250 mm/10 in)	
AXG300		Magnetic Flowmeter (300 mm/12 in)	
AXG350		Magnetic Flowmeter (350 mm/14 in)	
AXG400		Magnetic Flowmeter (400 mm/16 in)	
Use	**-G**	General-purpose	
	-C	Explosion protection	
	-W	Submersible	15 to 400 mm (0.5 to 16 in.), only for Remote sensor
Construction	**A**	Integral Flowmeter	
	D	Remote Sensor (for AXFA11)	
	E	Remote Sensor (for AXG1A)	
	G	Remote Sensor (for AXG4A)	
Explosion Protection	**000**	Non Explosion Protection Approval	
	KF2	ATEX Flameproof	See Restriction for Explosion Protection type
	KJ2	ATEX Flameproof with Intrinsically Safe output	See Restriction for Explosion Protection type
	KT2	ATEX Flameproof with Intrinsically Safe output for FOUNDATION Fieldbus, PROFIBUS PA	See Restriction for Explosion Protection type
	SF2	IECEx Flameproof	See Restriction for Explosion Protection type
	SJ2	IECEx Flameproof with Intrinsically Safe output	See Restriction for Explosion Protection type
	ST2	IECEx Flameproof with Intrinsically Safe output for FOUNDATION Fieldbus, PROFIBUS PA	See Restriction for Explosion Protection type
	FF2	FM Flameproof	See Restriction for Explosion Protection type
	FJ2	FM Flameproof with Intrinsically Safe output	See Restriction for Explosion Protection type
	FT2	FM Flameproof with Intrinsically Safe output for FOUNDATION Fieldbus, PROFIBUS PA	See Restriction for Explosion Protection type
	CF2	FMc Flameproof (Canada)	See Restriction for Explosion Protection type
	CJ2	FMc Flameproof with Intrinsically Safe output (Canada)	See Restriction for Explosion Protection type
	CT2	FMc Flameproof with Intrinsically Safe output for FOUNDATION Fieldbus, PROFIBUS PA (Canada)	See Restriction for Explosion Protection type
	GF2	EAC Flameproof	See Restriction for Explosion Protection type
	GJ2	EAC Flameproof with Intrinsically Safe output	See Restriction for Explosion Protection type
	GT2	EAC Flameproof with Intrinsically Safe output for FOUNDATION Fieldbus	See Restriction for Explosion Protection type
	JF5	Japan Flameproof	See Restriction for Explosion Protection type

All Rights Reserved. Copyright © 2017, Yokogawa Electric Corporation

(Continued)

Explosion Protection		**NF2**	NEPSI Flameproof	See Restriction for Explosion Protection type
		NJ2	NEPSI Flameproof with Intrinsically Safe output	See Restriction for Explosion Protection type
		PF2	Korea Flameproof	See Restriction for Explosion Protection type
		UF2	INMETRO Flameproof (Brazil)	See Restriction for Explosion Protection type
Process Connection	Wafer	**AA1**	ASME Class 150 Wafer	2.5 to 200 mm (0.1 to 8 in.)
		AA2	ASME Class 300 Wafer	2.5 to 200 mm (0.1 to 8 in.)
		AE1	EN PN10 Wafer	200 mm (8 in.)
		AE2	EN PN16 Wafer	65 to 200 mm (2.5 to 8 in.)
		AE4	EN PN40 Wafer	2.5 to 50 mm (0.1 to 2 in.)
		AG1	JIS F12 Wafer	80 to 200 mm (3 to 8 in.)
		AJ1	JIS 10K Wafer	2.5 to 200 mm (0.1 to 8 in.)
		AJ2	JIS 20K Wafer	2.5 to 200 mm (0.1 to 8 in.)
		AP1	JPI Class 150 Wafer	2.5 to 200 mm (0.1 to 8 in.) (32, 65, and 125 mm (1.25, 2.5, and 5 in.) are not available.)
	Stainless Steel Flange (F304)	**BA1**	ASME Class 150 Flange	
		BA2	ASME Class 300 Flange	2.5 to 300 mm (0.1 to 12 in.)
		BE1	EN PN10 Flange	200 to 400 mm (8 to 16 in.)
		BE2	EN PN16 Flange	65 to 300 mm (2.5 to 12 in.)
		BE3	EN PN25 Flange	80 to 400 mm (3 to 16 in.)
		BE4	EN PN40 Flange	2.5 to 50 mm (0.1 to 2 in.)
		BG1	JIS F12 Flange	80 to 400 mm (3 to 16 in.)
		BJ1	JIS 10K Flange	
		BJ2	JIS 20K Flange	2.5 to 300 mm (0.1 to 12 in.)
		BP1	JPI Class 150 Flange	32, 65, and 125 mm (1.25, 2.5, and 5 in.) are not available.
		DE4	EN PN40 Flange (Nominal Diameter 10 mm)	2.5 to 10 mm (0.1 to 0.4 in.)
		DJ1	JIS 10K Flange (Nominal Diameter 10 mm)	2.5 to 10 mm (0.1 to 0.4 in.)
		DJ2	JIS 20K Flange (Nominal Diameter 10 mm)	2.5 to 10 mm (0.1 to 0.4 in.)
	Stainless Steel Flange (F316)	**PA1**	ASME Class 150 Flange	32, 65, and 125 mm (1.25, 2.5, and 5 in.) are not available.
		PA2	ASME Class 300 Flange	2.5 to 300 mm (0.1 to 12 in.) (32, 65, and 125 mm (1.25, 2.5, and 5 in.) are not available.)
		PE1	EN PN10 Flange	200 to 400 mm (8 to 16 in.)
		PE2	EN PN16 Flange	80 to 300 mm (3 to 12 in.) (125 mm (5 in.) is not available.)
		PE3	EN PN25 Flange	80 to 400 mm (3 to 16 in.)
		PE4	EN PN40 Flange	2.5 to 50 mm (0.1 to 2 in.) (32 mm (1.25 in.) is not available.)
		PJ1	JIS 10K Flange	32, 65, and 125 mm (1.25, 2.5, and 5 in.) are not available.
	Carbon Steel Flange	**CA1**	ASME Class 150 Flange	50 to 400 mm (2 to 16 in.)
		CA2	ASME Class 300 Flange	50 to 300 mm (2 to 12 in.)
		CE1	EN PN10 Flange	200 to 400 mm (8 to 16 in.)
		CE2	EN PN16 Flange	65 to 300 mm (2.5 to 12 in.)
		CE4	EN PN40 Flange	50 mm (2 in.)
		CG1	JIS F12 Flange	80 to 400 mm (3 to 16 in.)
		CJ1	JIS 10K Flange	50 to 400 mm (2 to 16 in.)
		CJ2	JIS 20K Flange	50 to 300 mm (2 to 12 in.)

All Rights Reserved. Copyright © 2017, Yokogawa Electric Corporation

(Continued)

Process Connection	Carbon Steel Flange	**CS1**	AS Table D Flange	50 to 400 mm (2 to 16 in.) (65, and 125 mm (2.5, and 5 in.) are not available.)
		CS2	AS Table E Flange	50 to 300 mm (2 to 12 in.) (65, and 125 mm (2.5, and 5 in.) are not available.)
Lining		**A**	PFA Lining	
Electrode		**L**	Stainless Steel 316L	
		P	Platinum-Iridium	
		H	Nickel Alloy	
		T	Tantalum	
		V	Titanium	
		W	Tungsten Carbide	2.5 mm, 5 mm, 10 mm (0.1, 0.2, 0.4 in.) are not available
Grounding Device		**1**	None	
		2	Grounding Rings	Select an optional code
		3	Built-in Grounding Electrodes	Select an optional code
Housing and Coating		**1**	Standard Material with Standard Coating	
		2	Standard Material with Rugged Coating	Not applicable for Submersible
Cable Entry		**0**	JIS G1/2 Female	See Restriction for Explosion Protection type
		2	ASME 1/2 NPT Female	Not applicable for Submersible, See Restriction for Explosion Protection type
		4	ISO M20×1.5 Female	Not applicable for Submersible, See Restriction for Explosion Protection type
Accuracy		**B**	Standard	
		C	High Grade	25 to 200 mm (1 to 8 in.)
Power Supply		**-1**	100-240 V AC / 100-120 V DC	Only for Integral Flowmeter
		-2	24 V AC / DC	Only for Integral Flowmeter
		-N	None (Remote Sensor)	Only for Remote Sensor
Communication and I/O		**D#**	#: A, B, C, D, E, F, G, H, J, K, P, Q, R, S, T BRAIN and I/O (Type A to K, P to T). See "Details".	Only for Integral Flowmeter
		J#	#: A, B, C, D, E, F, G, H, J, K, P, Q, R, S, T HART 7 and I/O (Type A to K, P to T). See "Details".	Only for Integral Flowmeter
		M#	#: 0, 2, 6 Modbus and I/O (Type 0, 2, 6). See "Details".	Only for Integral Flowmeter
		F0	FOUNDATION Fieldbus I/O	Only for Integral Flowmeter
		G0	PROFIBUS PA I/O	Only for Integral Flowmeter
		P0	EtherNet/IP	Only for Integral Flowmeter Only for Transmitter Wiring Terminal: 1 Only for Display: 3 or N
		NN	None (Remote Sensor)	Only for Remote Sensor
Transmitter Wiring Terminal		**1**	M4 Screw-type	
		2	Clamp Type	
		N	None (Remote Sensor)	Only for Remote Sensor
Display		**1**	With Display (English, Multi-language)	Only for Integral Flowmeter
		2	With Display (English, Chinese)	Only for Integral Flowmeter
		3	With Display (English)	Only for Integral Flowmeter Only for Communication and I/O: P0
		N	Without Display/Remote Sensor	
Optional Specification			/# Refer to optional specification table.	

All Rights Reserved. Copyright © 2017, Yokogawa Electric Corporation

●General-purpose, Submersible, Flange, PFA Lining (500 mm/20 in.)

Model	Suffix Code											Description	Limitation
AXG500												Magnetic Flowmeter (500 mm/20 in)	
Use	**-G**											General-purpose	
	-W											Submersible	
Construction		**D**										Remote Sensor (for AXFA11)	
		E										Remote Sensor (for AXG1A)	
Explosion Protection			**000**									Non Explosion Protection Approval	
Process Connection	Stainless Steel Flange (F304)			**BA1**								ASME Class 150 Flange	
				BE1								EN PN10 Flange	
				BE2								EN PN16 Flange	
	Carbon Steel Flange			**CA1**								ASME Class 150 Flange	
				CE1								EN PN10 Flange	
				CE2								EN PN16 Flange	
Lining					**A**							PFA Lining	
Electrode						**L**						Stainless Steel 316L	
						H						Nickel Alloy	
Grounding Device							**1**					None	
							2					Grounding Rings	Select an optional code
Housing and Coating								**1**				Standard Material with Standard Coating	
								2				Standard Material with Rugged Coating	Not applicable for Submersible
Cable Entry									**0**			JIS G1/2 Female	
									2			ASME 1/2 NPT Female	Not applicable for Submersible
									4			ISO M20×1.5 Female	Not applicable for Submersible
Accuracy										**B**		Standard	
Power Supply											**-N**	None	
Communication and I/O											**NN**	None	
Transmitter Wiring Terminal											**N**	None	
Display											**N**	Remote Sensor	
Optional Specification												/# Refer to optional specification table.	

All Rights Reserved. Copyright © 2017, Yokogawa Electric Corporation

●General-purpose, Submersible, Explosionprotection, Flange, PFA Lining (High Pressure Type, ASME Class 600)

Model	Suffix Code	Description	Limitation
AXG025		Magnetic Flowmeter (25 mm/1 in)	
AXG040		Magnetic Flowmeter (40 mm/1.5 in)	
AXG050		Magnetic Flowmeter (50 mm/2 in)	
AXG080		Magnetic Flowmeter (80 mm/3 in)	
AXG100		Magnetic Flowmeter (100 mm/4 in)	
Use	**-G**	General-purpose	
	-C	Explosion protection	
	-W	Submersible	
Construction	**A**	Integral Flowmeter	
	D	Remote Sensor (for AXFA11)	
	E	Remote Sensor (for AXG1A)	
	G	Remote Sensor (for AXG4A)	
Explosion Protection	**000**	Non Explosion Protection Approval	
	SF2	IECEx Flameproof	See Restriction for Explosion Protection type
	SJ2	IECEx Flameproof with Intrinsically Safe output	See Restriction for Explosion Protection type
	ST2	IECEx Flameproof with Intrinsically Safe output for FOUNDATION Fieldbus, PROFIBUS PA	See Restriction for Explosion Protection type
	FF2	FM Flameproof	See Restriction for Explosion Protection type
	FJ2	FM Flameproof with Intrinsically Safe output	See Restriction for Explosion Protection type
	FT2	FM Flameproof with Intrinsically Safe output for FOUNDATION Fieldbus, PROFIBUS PA	See Restriction for Explosion Protection type
	GF2	EAC Flameproof	See Restriction for Explosion Protection type
	GJ2	EAC Flameproof with Intrinsically Safe output	See Restriction for Explosion Protection type
	GT2	EAC Flameproof with Intrinsically Safe output for FOUNDATION Fieldbus	See Restriction for Explosion Protection type
	NF2	NEPSI Flameproof	See Restriction for Explosion Protection type
	NJ2	NEPSI Flameproof with Intrinsically Safe output	See Restriction for Explosion Protection type
	PF2	Korea Flameproof	See Restriction for Explosion Protection type
	UF2	INMETRO Flameproof (Brazil)	See Restriction for Explosion Protection type
Process Connection	Stainless Steel Flange (F304) **EA4**	ASME Class 600 Flange (High Pressure)	
Lining	**A**	PFA Lining	
Electrode	**L**	Stainless Steel 316L	
Grounding device	**2**	Grounding Rings	Select an optional code
Housing and Coating	**1**	Standard Material with Standard Coating	
	2	Standard Material with Rugged Coating	Not applicable for Submersible
Cable Entry	**0**	JIS G1/2 Female	See Restriction for Explosion Protection type
	2	ASME 1/2 NPT Female	Not applicable for Submersible, See Restriction for Explosion Protection type
	4	ISO M20×1.5 Female	Not applicable for Submersible, See Restriction for Explosion Protection type
Accuracy	**B**	Standard	

All Rights Reserved. Copyright © 2017, Yokogawa Electric Corporation

(Continued)

Power Supply	-1		100-240 V AC / 100-120 V DC	Only for Integral Flowmeter
	-2		24 V AC / DC	Only for Integral Flowmeter
	-N		None (Remote Sensor)	Only for Remote Sensor
Communication and I/O		D#	#: A, B, C, D, E, F, G, H, J, K, P, Q, R, S, T BRAIN and I/O (Type A to K, P to T). See "Details".	Only for Integral Flowmeter
		J#	#: A, B, C, D, E, F, G, H, J, K, P, Q, R, S, T HART 7 and I/O (Type A to K, P to T). See "Details".	Only for Integral Flowmeter
		M#	#: 0, 2, 6 Modbus and I/O (Type 0, 2, 6). See "Details".	Only for Integral Flowmeter
		F0	FOUNDATION Fieldbus I/O	Only for Integral Flowmeter
		G0	PROFIBUS PA I/O	Only for Integral Flowmeter
		P0	EtherNet/IP	Only for Integral Flowmeter Only for Transmitter Wiring Terminal: 1 Only for Display: 3 or N
		NN	None (Remote Sensor)	Only for Remote Sensor
Transmitter Wiring Terminal			1	M4 Screw-type	
			2	Clamp Type	
			N	None (Remote Sensor)	Only for Remote Sensor
Display				1	With Display (English, Multi-language)	Only for Integral Flowmeter
				2	With Display (English, Chinese)	Only for Integral Flowmeter
				3	With Display (English)	Only for Integral Flowmeter Only for Communication and I/O: P0
				N	Without Display/Remote Sensor	
Optional Specification					/# Refer to optional specification table.	

●General-purpose, Explosionprotection, Ceramics Tube

Model	Suffix Code				Description	Limitation
AXG002					Magnetic Flowmeter (2.5 mm/0.1 in)	
AXG005					Magnetic Flowmeter (5 mm/0.2 in)	
AXG010					Magnetic Flowmeter (10 mm/0.4 in)	
AXG015					Magnetic Flowmeter (15 mm/0.5 in)	
AXG025					Magnetic Flowmeter (25 mm/1 in)	
AXG040					Magnetic Flowmeter (40 mm/1.5 in)	
AXG050					Magnetic Flowmeter (50 mm/2 in)	
AXG080					Magnetic Flowmeter (80 mm/3 in)	
AXG100					Magnetic Flowmeter (100 mm/4 in)	
AXG150					Magnetic Flowmeter (150 mm/6 in)	
AXG200					Magnetic Flowmeter (200 mm/8 in)	
	Use	-G			General-purpose	
		-C			Explosion protection	
	Construction		A		Integral Flowmeter	
			D		Remote Sensor (for AXFA11)	
			E		Remote Sensor (for AXG1A)	
			G		Remote Sensor (for AXG4A)	
	Explosion Protection			000	Non Explosion Protection Approval	
				KF2	ATEX Flameproof	See Restriction for Explosion Protection type
				KJ2	ATEX Flameproof with Intrinsically Safe output	See Restriction for Explosion Protection type
				KT2	ATEX Flameproof with Intrinsically Safe output for FOUNDATION Fieldbus, PROFIBUS PA	See Restriction for Explosion Protection type
				SF2	IECEx Flameproof	See Restriction for Explosion Protection type
				SJ2	IECEx Flameproof with Intrinsically Safe output	See Restriction for Explosion Protection type
				ST2	IECEx Flameproof with Intrinsically Safe output for FOUNDATION Fieldbus, PROFIBUS PA	See Restriction for Explosion Protection type
				FF2	FM Flameproof	See Restriction for Explosion Protection type

All Rights Reserved. Copyright © 2017, Yokogawa Electric Corporation

(Continued)

Explosion Protection		**FJ2**	FM Flameproof with Intrinsically Safe output	See Restriction for Explosion Protection type
		FT2	FM Flameproof with Intrinsically Safe output for FOUNDATION Fieldbus, PROFIBUS PA	See Restriction for Explosion Protection type
		GF2	EAC Flameproof	See Restriction for Explosion Protection type
		GJ2	EAC Flameproof with Intrinsically Safe output	See Restriction for Explosion Protection type
		GT2	EAC Flameproof with Intrinsically Safe output for FOUNDATION Fieldbus	See Restriction for Explosion Protection type
		JF5	Japan Flameproof	See Restriction for Explosion Protection type
		NF2	NEPSI Flameproof	See Restriction for Explosion Protection type
		NJ2	NEPSI Flameproof with Intrinsically Safe output	See Restriction for Explosion Protection type
		PF2	Korea Flameproof	See Restriction for Explosion Protection type
		UF2	INMETRO Flameproof (Brazil)	See Restriction for Explosion Protection type
Process Connection	Wafer	**AA1**	ASME Class 150 Wafer	15 to 200 mm (0.5 to 8 in.) (125 mm (5 in.) is not available.)
		AA2	ASME Class 300 Wafer	15 to 200 mm (0.5 to 8 in.) (125 mm (5 in.) is not available.)
		AE1	EN PN10 Wafer	200 mm (8 in.)
		AE2	EN PN16 Wafer	80 to 200 mm (3 to 8 in.) (125 mm (5 in.) is not available.)
		AE4	EN PN40 Wafer	15 to 50 mm (0.5 to 2 in.)
		AG1	JIS F12 Wafer	80 to 200 mm (3 to 8 in.) (125 mm (5 in.) is not available.)
		AJ1	JIS 10K Wafer	15 to 200 mm (0.5 to 8 in.) (125 mm (5 in.) is not available.)
		AJ2	JIS 20K Wafer	15 to 200 mm (0.5 to 8 in.) (125 mm (5 in.) is not available.)
	Union Joint Stainless Steel (F316)	**GUN**	Screw Union Joint	2.5 to 5 mm (0.1 to 0.2 in.): 1/4 NPT 10 mm (0.4 in.): 3/8 NPT
		GUR	Screw Union Joint	2.5 to 5 mm (0.1 to 0.2 in.): R 1/4 10 mm (0.4 in.): R 3/8
		GUW	Welding Union Joint	2.5 to 10 mm (0.1 to 0.4 in.)
Lining		**C**	Ceramics Tube	
Erectrode		**E**	Platinum-alumina Cermet	
Grounding Device		**1**	None	
		2	Grounding Rings	2.5 mm, 5 mm, 10 mm (0.1, 0.2, 0.4 in.) are not available Select an optional code
Housing and Coating		**1**	Standard Material with Standard Coating	
		2	Standard Material with Rugged Coating	
Cable Entry		**0**	JIS G1/2 Female	See Restriction for Explosion Protection type
		2	ASME 1/2 NPT Female	See Restriction for Explosion Protection type
		4	ISO M20×1.5 Female	See Restriction for Explosion Protection type
Accuracy		**B**	Standard	
		C	High Grade	25 to 200 mm (1 to 8 in.)
Power Supply		**-1**	100-240 V AC / 100-120 V DC	Only for Integral Flowmeter
		-2	24 V AC / DC	Only for Integral Flowmeter
		-N	None (Remote Sensor)	Only for Remote Sensor

All Rights Reserved. Copyright © 2017, Yokogawa Electric Corporation

(Continued)

Communication and I/O	**D#**	#: A, B, C, D, E, F, G, H, J, K, P, Q, R, S, T BRAIN and I/O (Type A to K, P to T). See "Details".	Only for Integral Flowmeter
	J#	#: A, B, C, D, E, F, G, H, J, K, P, Q, R, S, T HART 7 and I/O (Type A to K, P to T). See "Details".	Only for Integral Flowmeter
	M#	#: 0, 2, 6 Modbus and I/O (Type 0, 2, 6). See "Details".	Only for Integral Flowmeter
	F0	FOUNDATION Fieldbus I/O	Only for Integral Flowmeter
	G0	PROFIBUS PA I/O	Only for Integral Flowmeter
	P0	EtherNet/IP	Only for Integral Flowmeter Only for Transmitter Wiring Terminal: 1 Only for Display: 3 or N
	NN	None (Remote Sensor)	Only for Remote Sensor
Transmitter Wiring Terminal	**1**	M4 Screw-type	
	2	Clamp Type	
	N	None (Remote Sensor)	Only for Remote Sensor
Display	**1**	With Display (English, Multi-language)	Only for Integral Flowmeter
	2	With Display (English, Chinese)	Only for Integral Flowmeter
	3	With Display (English)	Only for Integral Flowmeter Only for Communication and I/O: P0
	N	Without Display/Remote Sensor	
Optional Specification		/# Refer to optional specification table.	

●Hygienic, Hygienic Explosion protection, PFA Lining

Model	Suffix Code	Description	Limitation
AXG015		Magnetic Flowmeter (15 mm/0.5 in)	
AXG025		Magnetic Flowmeter (25 mm/1 in)	
AXG032		Magnetic Flowmeter (32 mm/1.25 in)	
AXG040		Magnetic Flowmeter (40 mm/1.5 in)	
AXG050		Magnetic Flowmeter (50 mm/2 in)	
AXG065		Magnetic Flowmeter (65 mm/2.5 in)	
AXG080		Magnetic Flowmeter (80 mm/3 in)	
AXG100		Magnetic Flowmeter (100 mm/4 in)	
AXG125		Magnetic Flowmeter (125 mm/5 in)	
Use	**-H**	Hygienic	
	-J	Hygienic Explosion Protection	
Construction	**A**	Integral Flowmeter	
	D	Remote Sensor (for AXFA11)	
	E	Remote Sensor (for AXG1A)	
	G	Remote Sensor (for AXG4A)	
Explosion Protection	**000**	Non Explosion Protection Approval	
	KF2	ATEX Flameproof	See Restriction for Explosion Protection type
	KJ2	ATEX Flameproof with Intrinsically Safe output	See Restriction for Explosion Protection type
	KT2	ATEX Flameproof with Intrinsically Safe output for FOUNDATION Fieldbus, PROFIBUS PA	See Restriction for Explosion Protection type
	SF2	IECEx Flameproof	See Restriction for Explosion Protection type
	SJ2	IECEx Flameproof with Intrinsically Safe output	See Restriction for Explosion Protection type
	ST2	IECEx Flameproof with Intrinsically Safe output for FOUNDATION Fieldbus, PROFIBUS PA	See Restriction for Explosion Protection type
	FF2	FM Flameproof	See Restriction for Explosion Protection type
	FJ2	FM Flameproof with Intrinsically Safe output	See Restriction for Explosion Protection type
	FT2	FM Flameproof with Intrinsically Safe output for FOUNDATION Fieldbus, PROFIBUS PA	See Restriction for Explosion Protection type
	CF2	FMc Flameproof (Canada)	See Restriction for Explosion Protection type

All Rights Reserved. Copyright © 2017, Yokogawa Electric Corporation

(Continued)

Explosion Protection		**CJ2**	FMc Flameproof with Intrinsically Safe output (Canada)	See Restriction for Explosion Protection type
		CT2	FMc Flameproof with Intrinsically Safe output for FOUNDATION Fieldbus, PROFIBUS PA (Canada)	See Restriction for Explosion Protection type
		GF2	EAC Flameproof	See Restriction for Explosion Protection type
		GJ2	EAC Flameproof with Intrinsically Safe output	See Restriction for Explosion Protection type
		GT2	EAC Flameproof with Intrinsically Safe output for FOUNDATION Fieldbus	See Restriction for Explosion Protection type
		JF5	Japan Flameproof	See Restriction for Explosion Protection type
		NF2	NEPSI Flameproof	See Restriction for Explosion Protection type
		NJ2	NEPSI Flameproof with Intrinsically Safe output	See Restriction for Explosion Protection type
		PF2	Korea Flameproof	See Restriction for Explosion Protection type
		UF2	INMETRO Flameproof (Brazil)	See Restriction for Explosion Protection type
Process Connection	Clamp	**HAB**	Tri-Clamp, Stainless Steel F316L	15 to 100 mm (0.5 to 4 in.) (32 mm (1.25 in.) is not available.)
		HDB	DIN 32676 Clamp, Stainless Steel F316L	
		HJA	ISO 2852 Clamp (for JIS G3447 Piping), Stainless Steel F304	
		HJB	ISO 2852 Clamp (for JIS G3447 Piping), Stainless Steel F316L	
		HKB	ISO 2852 / SMS 3016 Clamp, Stainless Steel F316L	
	Union	**JDB**	DIN 11851 Union, Stainless Steel F316L	
		JJA	ISO 2853 Union (for JIS G3447 Piping), Stainless Steel F304	25 to 100 mm (1 to 4 in.)
		JJB	ISO 2853 Union (for JIS G3447 Piping), Stainless Steel F316L	25 to 100 mm (1 to 4 in.)
		JKB	ISO 2853 Union, Stainless Steel F316L	15 to 100 mm (0.5 to 4 in.)
		JSB	SMS 1145 Union (Open groove packing type), Stainless Steel F316L	25 to 100 mm (1 to 4 in.)
Process Connection	Butt Weld Joint	**KDB**	DIN 11850 Piping Butt Weld Joint, Stainless Steel F316L	
		KJA	JIS G3447 Piping Butt Weld Joint, Stainless Steel F304	
		KJB	JIS G3447 Piping Butt Weld Joint, Stainless Steel F316L	
		KKB	ISO 2037 Piping Butt Weld Joint, Stainless Steel F316L	
Lining		**A**	PFA Lining	
Erectrode		**L**	Stainless Steel 316L	
Grouding Device		**1**	None	
Housing and Coating		**1**	Standard Material with Standard Coating	
Cable Entry		**0**	JIS G1/2 Female	See Restriction for Explosion Protection type
		2	ASME 1/2 NPT Female	See Restriction for Explosion Protection type
		4	ISO M20×1.5 Female	See Restriction for Explosion Protection type
Accuracy		**B**	Standard	
		C	High Grade	25 to 125 mm (1 to 5 in.)
Power Supply		**-1**	100-240 V AC / 100-120 V DC	Only for Integral Flowmeter
		-2	24 V AC / DC	Only for Integral Flowmeter
		-N	None (Remote Sensor)	Only for Remote Sensor

All Rights Reserved. Copyright © 2017, Yokogawa Electric Corporation

(Continued)

Communication and I/O	**D#**	#: A, B, C, D, E, F, G, H, J, K, P, Q, R, S, T BRAIN and I/O (Type A to K, P to T). See "Details".	Only for Integral Flowmeter
	J#	#: A, B, C, D, E, F, G, H, J, K, P, Q, R, S, T HART 7 and I/O (Type A to K, P to T). See "Details".	Only for Integral Flowmeter
	M#	#: 0, 2, 6 Modbus and I/O (Type 0, 2, 6). See "Details".	Only for Integral Flowmeter
	F0	FOUNDATION Fieldbus I/O	Only for Integral Flowmeter
	G0	PROFIBUS PA I/O	Only for Integral Flowmeter
	P0	EtherNet/IP	Only for Integral Flowmeter Only for Transmitter Wiring Terminal: 1 Only for Display code: 3 or N
	NN	None (Remote Sensor)	Only for Remote Sensor
Transmitter Wiring Terminal	**1**	M4 Screw-type	
	2	Clamp Type	
	N	None (Remote Sensor)	Only for Remote Sensor
Display	**1**	With Display (English, Multi-language)	Only for Integral Flowmeter
	2	With Display (English, Chinese)	Only for Integral Flowmeter
	3	With Display (English)	Only for Integral Flowmeter Only for Communication and I/O: P0
	N	Without Display/Remote Sensor	
Optional Specification		/# Refer to optional specification table.	

●Replacement Model, General-purpose, Submersible, Explosionprotection, Wafer, PFA Lining

Model	Suffix Code	Description	Limitation
AXG025		Magnetic Flowmeter (25 mm/1 in)	
AXG040		Magnetic Flowmeter (40 mm/1.5 in)	
AXG050		Magnetic Flowmeter (50 mm/2 in)	
AXG080		Magnetic Flowmeter (80 mm/3 in)	
AXG100		Magnetic Flowmeter (100 mm/4 in)	
AXG150		Magnetic Flowmeter (150 mm/6 in)	
AXG200		Magnetic Flowmeter (200 mm/8 in)	
Use	**-G**	General-purpose	
	-C	Explosion protection	
	-W	Submersible	25 to 200 mm (1 to 8 in.), only for Remote sensor
Construction	**A**	Integral Flowmeter	
	E	Remote Sensor (for AXG1A)	
	G	Remote Sensor (for AXG4A)	
Explosion Protection	**000**	Non Explosion Protection Approval	
	SF2	IECEx Flameproof	See Restriction for Explosion Protection type
	SJ2	IECEx Flameproof with Intrinsically Safe output	See Restriction for Explosion Protection type
	ST2	IECEx Flameproof with Intrinsically Safe output for FOUNDATION Fieldbus, PROFIBUS PA	See Restriction for Explosion Protection type
	FF2	FM Flameproof	See Restriction for Explosion Protection type
	FJ2	FM Flameproof with Intrinsically Safe output	See Restriction for Explosion Protection type
	FT2	FM Flameproof with Intrinsically Safe output for FOUNDATION Fieldbus, PROFIBUS PA	See Restriction for Explosion Protection type
	JF5	Japan Flameproof	See Restriction for Explosion Protection type
	NF2	NEPSI Flameproof	See Restriction for Explosion Protection type
	NJ2	NEPSI Flameproof with Intrinsically Safe output	See Restriction for Explosion Protection type
	PF2	Korea Flameproof	See Restriction for Explosion Protection type

All Rights Reserved. Copyright © 2017, Yokogawa Electric Corporation

(Continued)

Explosion Protection		**UF2**	INMETRO Flameproof (Brazil)	See Restriction for Explosion Protection type
Process Connection	Wafer	**AA1**	ASME Class 150 Wafer	25 to 200 mm (1 to 8 in.)
		AA2	ASME Class 300 Wafer	25 to 200 mm (1 to 8 in.)
		AG1	JIS F12 Wafer	80 to 200 mm (3 to 8 in.)
		AJ1	JIS 10K Wafer	25 to 200 mm (1 to 8 in.)
		AJ2	JIS 20K Wafer	25 to 200 mm (1 to 8 in.)
Lining		**A**	PFA Lining	
Electrode		**L**	Stainless Steel 316L	
		P	Platinum-Iridium	
		H	Nickel Alloy	
		T	Tantalum	
		V	Titanium	
		W	Tungsten Carbide	
Grounding Device		**2**	Grounding Rings	Select an optional code / GAN
Housing and Coating		**1**	Standard Material with Standard Coating	
		2	Standard Material with Rugged Coating	Not applicable for Submersible
Cable Entry		**0**	JIS G1/2 Female	See Restriction for Explosion Protection type
		2	ASME 1/2 NPT Female	Not applicable for Submersible, See Restriction for Explosion Protection type
		4	ISO M20×1.5 Female	Not applicable for Submersible, See Restriction for Explosion Protection type
Accuracy		**B**	Standard	
Power Supply		**-1**	100-240 V AC / 100-120 V DC	Only for Integral Flowmeter
		-2	24 V AC / DC	Only for Integral Flowmeter
		-N	None (Remote Sensor)	Only for Remote Sensor
Communication and I/O		**D#**	#: A, B, C, D, E, F, G, H, J, K, P, Q, R, S, T BRAIN and I/O (Type A to K, P to T). See "Details".	Only for Integral Flowmeter
		J#	#: A, B, C, D, E, F, G, H, J, K, P, Q, R, S, T HART 7 and I/O (Type A to K, P to T). See "Details".	Only for Integral Flowmeter
		M#	#: 0, 2, 6 Modbus and I/O (Type 0, 2, 6). See "Details".	Only for Integral Flowmeter
		F0	FOUNDATION Fieldbus I/O	Only for Integral Flowmeter
		G0	PROFIBUS PA I/O	Only for Integral Flowmeter
		P0	EtherNet/IP	Only for Integral Flowmeter Only for Transmitter Wiring Terminal: 1 Only for Display: 3 or N
		NN	None (Remote Sensor)	Only for Remote Sensor
Transmitter Wiring Terminal		**1**	M4 Screw-type	
		2	Clamp Type	
		N	None (Remote Sensor)	Only for Remote Sensor
Display		**1**	With Display (English, Multi-language)	Only for Integral Flowmeter
		2	With Display (English, Chinese)	Only for Integral Flowmeter
		3	With Display (English)	Only for Integral Flowmeter Only for Communication and I/O: P0
		N	Without Display/Remote Sensor	
Optional Specification			/RW/GAN With Grounding Rings For Wafer Type Replacement Model	Mandatory for Wafer Type Replacement Model
			/# Refer to optional specification table.	

All Rights Reserved. Copyright © 2017, Yokogawa Electric Corporation

●General-purpose, Explosion protection. Remote Transmitter

Model	Suffix Code	Description	Limitation
AXG4A		Magnetic Flowmeter Remote Transmitter	
Use	**-G**	General-purpose	
	-C	Explosion Protection	
Explosion Protection	**000**	Non Explosion Protection Approval	
	KF2	ATEX Flameproof	See Restriction for Explosion Protection type
	KJ2	ATEX Flameproof with Intrinsically Safe output	See Restriction for Explosion Protection type
	KT2	ATEX Flameproof with Intrinsically Safe output for FOUNDATION Fieldbus, PROFIBUS PA	See Restriction for Explosion Protection type
	SF2	IECEx Flameproof	See Restriction for Explosion Protection type
	SJ2	IECEx Flameproof with Intrinsically Safe output	See Restriction for Explosion Protection type
	ST2	IECEx Flameproof with Intrinsically Safe output for FOUNDATION Fieldbus, PROFIBUS PA	See Restriction for Explosion Protection type
	FF2	FM Flameproof	See Restriction for Explosion Protection type
	FJ2	FM Flameproof with Intrinsically Safe output	See Restriction for Explosion Protection type
	FT2	FM Flameproof with Intrinsically Safe output for FOUNDATION Fieldbus, PROFIBUS PA	See Restriction for Explosion Protection type
	CF2	FMc Flameproof (Canada)	See Restriction for Explosion Protection type
	CJ2	FMc Flameproof with Intrinsically Safe output (Canada)	See Restriction for Explosion Protection type
	CT2	FMc Flameproof with Intrinsically Safe output for FOUNDATION Fieldbus, PROFIBUS PA (Canada)	See Restriction for Explosion Protection type
	GF2	EAC Flameproof	See Restriction for Explosion Protection type
	GJ2	EAC Flameproof with Intrinsically Safe output	See Restriction for Explosion Protection type
	GT2	EAC Flameproof with Intrinsically Safe output for FOUNDATION Fieldbus	See Restriction for Explosion Protection type
	JF5	Japan Flameproof	See Restriction for Explosion Protection type
	NF2	NEPSI Flameproof	See Restriction for Explosion Protection type
	NJ2	NEPSI Flameproof with Intrinsically Safe output	See Restriction for Explosion Protection type
	PF2	Korea Flameproof	See Restriction for Explosion Protection type
	UF2	INMETRO Flameproof (Brazil)	See Restriction for Explosion Protection type
Housing and Coating	**1**	Standard Material with Standard Coating	
	2	Standard Material with Rugged Coating	
Cable Entry	**0**	JIS G1/2 Female	See Restriction for Explosion Protection type
	2	ASME 1/2 NPT Female	See Restriction for Explosion Protection type
	4	ISO M20×1.5 Female	See Restriction for Explosion Protection type
Power Supply	**1**	100-240 V AC / 100-120 V DC	
	2	24 V AC / DC	
Communication and I/O	**D#**	#: A, B, C, D, E, F, G, H, J, K, P, Q, R, S, T BRAIN and I/O (Type A to K, P to T). See "Details".	
	J#	#: A, B, C, D, E, F, G, H, J, K, P, Q, R, S, T HART 7 and I/O (Type A to K, P to T). See "Details".	
	M#	#: 0, 2, 6 Modbus and I/O (Type 0, 2, 6). See "Details".	
	F0	FOUNDATION Fieldbus I/O	
	G0	PROFIBUS PA I/O	
	P0	EtherNet/IP	Only for Transmitter Wiring Terminal: 1 Only for Display code: 3 or N

All Rights Reserved. Copyright © 2017, Yokogawa Electric Corporation

(Continued)

Transmitter Wiring Terminal	**1**	M4 Screw-type	
	2	Clamp Type	
Display	**1**	With Display (English, Multi-language)	
	2	With Display (English, Chinese)	
	3	With Display (English)	Only for Communication and I/O: P0
	N	Without Display	
Optional Specification		/# Refer to optional specification table.	

●Signal Cable

Model	Suffix Code	Optional Code	Description
AX01C			Magnetic Flowmeter Signal Cable
Cable Finish and Length	**-A###** (*1)		Unfinished, Cable length ### m, Set of Finishing Parts for M4 Screws
	-B### (*1)		Finished for AXG1A, Cable Length ### m
	-C### (*1)		Finished for AXG4A, Cable Length ### m
	-D### (*1)		Finished for AXFA11, Cable Length ### m
Finishing Parts		/C# (*2)	Finishing Parts (# sets)

*1: Specify the cable length in the "###" with the numerical value three digits (001 to 200) as multiple of 1 meter (e.g. 001, 002, or 005) for a length up to 5 m, as multiple of 5 meters up to 100 m (e.g. 010, 020, or 100), or as multiple of 10 meters up to 200 m (e.g. 110, 120, or 200).
The maximum cable length: -A###: 200 m, -B###: 200 m, -C###: 100 m, -D###: 200 m
5 m (16 ft) when using with Marine Approval Type

*2: Specify the finishing parts quantity in the "#" with the numerical value one digit (1 to 9).

●Details: Communication and I/O (HART type, BRAIN type)

Type	Communication and I/O Code		Number of Input and Output							
	BRAIN	HART 7	Current Output Active	Pulse/ Status Output Passive	Status Input (No-voltage)	Status Output Passive	Pulse/Status Output Active (with internal resistor)	Pulse/Status Output Active (without internal resistor)	Current Output Passive	Current Input Active
Type A	DA	JA	1	1	—	—	—	—	—	—
Type B	DB	JB	2	2	—	—	—	—	—	—
Type C	DC	JC	2	1	1	—	—	—	—	—
Type D	DD	JD	1	2	—	1	—	—	—	—
Type E	DE	JE	1	2	1	—	—	—	—	—
Type F	DF	JF	1	1	1	—	1	—	—	—
Type G	DG	JG	1	1	1	—	—	1	—	—
Type H	DH	JH	1	1	—	—	—	—	1	1
Type J	DJ	JJ	1	2	—	—	—	—	—	1
Type K	DK	JK	1	1	1	—	—	—	—	1

●Details: Communication and I/O (IS Output)

Type	Communication and I/O Code		Number of Input and Output		
	BRAIN	HART	Current Output Passive	Pulse/Status Output Passive	Pulse/Status Output Passive (NAMUR)
Type P	DP	JP	2	1	—
Type Q	DQ	JQ	2	2	—
Type R	DR	JR	2	—	1
Type S	DS	JS	2	—	2
Type T	DT	JT	1	1	—

All Rights Reserved. Copyright © 2017, Yokogawa Electric Corporation

●Details: Communication and I/O (Modbus type)

Type	Communication and I/O Code	Number of Input and Output		
	Modbus	Current Output Active	Pulse/ Status Output Passive	Current Input Active
Type 0	M0	—	1	—
Type 2	M2	—	1	1
Type 6	M6	1	1	—

●Details: Communication and I/O (FOUNDATION Fieldbus type)

Type	Communication and I/O Code	Number of Input and Output		
	FOUNDATION Fieldbus	Current Output Active	Pulse/ Status Output Passive	Current Input Active
Type F0	F0	—	1	—

●Details: Communication and I/O (PROFIBUS PA type)

Type	Communication and I/O code	Number of Input and Output		
	PROFIBUS PA	Current Output Active	Pulse/Status Output Passive	Current Input Active
Type G0	G0	—	1	—

●Details: Communication and I/O (EtherNet/IP type)

Type	Communication and I/O code	Number of Input and Output		
	EtherNet/IP	Current Output Active	Pulse/Status Output	Current Input Active
Type P0	P0	—	—	—

●Details: Restriction for Explosion protection type

For Explosion protection type, the following combinations of suffix code or optional code are restricted. For other optional codes, see optional code tables.

Item	Code	Restriction of Combination	
		Mandatory	Not Available
ATEX Flameproof	KF2	• Optional Code: EC	• Use: -G, -W, -H • Process Connection: AG1, AJ#, AP1, BG1, BJ#, BP1, CG1, CJ#, CS#, DJ#, EA4, PJ1 • Cable Entry: 0 (JIS G1/2) • Communication and I/O: Type P, Q, R, S, T, P0 • Optional Code: CS, RW, GAN
ATEX Flameproof with Intrinsically Safe output	KJ2	• Communication and I/O: Type P, Q, R, S, T • Optional Code: EC • Transmitter Wiring Terminal: 2	• Use: -G, -W, -H • Construction: D, E, G (Remote Sensor) • Process Connection: AG1, AJ#, AP1, BG1, BJ#, BP1, CG1,CJ#, CS#, DJ#, EA4, PJ1 • Cable Entry: 0 (JIS G1/2) • Optional Code: CS, RW, GAN
ATEX Flameproof with Intrinsically Safe output, FOUNDATION Fieldbus / PROFIBUS PA	KT2	• Communication and I/O: Type F0, G0 • Optional Code: EC • Transmitter Wiring Terminal: 2	• Use: -G, -W, -H • Construction: D, E, G (Remote Sensor) • Process Connection: AG1, AJ#, AP1, BG1, BJ#, BP1, CG1,CJ#, CS#, DJ#, EA4, PJ1 • Cable Entry: 0 (JIS G1/2) • Optional Code: CS, RW, GAN
IECEx Flameproof	SF2	—	• Use: -G, -W, -H • Cable Entry: 0 (JIS G1/2) • Communication and I/O: Type P, Q, R, S, T, P0 • Optional Code: EC (Excludes combination with optional code WCD)
IECEx Flameproof with Intrinsically Safe output	SJ2	• Communication and I/O: Type P, Q, R, S, T • Transmitter Wiring Terminal: 2	• Use: -G, -W, -H • Construction: D, E, G (Remote Sensor) • Cable Entry: 0 (JIS G1/2) • Optional Code: EC
IECEx Flameproof with Intrinsically Safe output, FOUNDATION Fieldbus / PROFIBUS PA	ST2	• Communication and I/O: Type F0, G0 • Transmitter Wiring Terminal: 2	• Use: -G, -W, -H • Construction: D, E, G (Remote Sensor) • Cable Entry: 0 (JIS G1/2) • Optional Code: EC

All Rights Reserved. Copyright © 2017, Yokogawa Electric Corporation

(Continued)

FM Flameproof	FF2	• Cable Entry: 2 (ASME 1/2NPT)	• Use: -G, -W, -H • Grounding Device: 3 • Communication and I/O: Type P, Q, R, S, T, P0 • Optional Code: EC • Optional Code: GBP, GBT
FM Flameproof with Intrinsically Safe output	FJ2	• Cable Entry: 2 (ASME 1/2NPT) • Communication and I/O: Type P, Q, R, S, T • Transmitter Wiring Terminal: 2	• Use: -G, -W, -H • Construction: D, E, G (Remote Sensor) • Grounding Device: 3 • Optional Code: EC • Optional Code: GBP, GBT
FM Flameproof with Intrinsically Safe output, FOUNDATION Fieldbus / PROFIBUS PA	FT2	• Cable Entry: 2 (ASME 1/2NPT) • Communication and I/O: Type F0, G0 • Transmitter Wiring Terminal: 2	• Use: -G, -W, -H • Construction: D, E, G (Remote Sensor) • Grounding Device: 3 • Optional Code: GBP, GBT • Optional Code:EC
FMc Flameproof (Canada)	CF2	• Cable Entry: 2 (ASME 1/2NPT) • Optional Code: CS	• Use: -G, -W, -H • Process Connection: EA4 • Lining: C • Grounding Device: 3 • Communication and I/O: Type P, Q, R, S, T, P0 • Optional Code: EC • Optional Code: GBP, GBT, RW, GAN
FMc Flameproof with Intrinsically Safe output (Canada)	CJ2	• Cable Entry: 2 (ASME 1/2NPT) • Communication and I/O: Type P, Q, R, S, T • Transmitter Wiring Terminal: 2 • Optional Code: CS	• Use: -G, -W, -H • Construction: D, E, G (Remote Sensor) • Process Connection: EA4 • Lining: C • Grounding Device: 3 • Optional Code: EC • Optional Code: GBP, GBT, RW, GAN
FMc Flameproof with Intrinsically Safe output, FOUNDATION Fieldbus / PROFIBUS PA (Canada)	CT2	• Cable Entry: 2 (ASME 1/2NPT) • Communication and I/O: Type F0, G0 • Transmitter Wiring Terminal: 2 • Optional Code: CS	• Use: -G, -W, -H • Construction: D, E, G (Remote Sensor) • Process Connection: EA4 • Lining: C • Grounding Device: 3 • Optional Code: EC • Optional Code: GBP, GBT, RW, GAN
EAC Flameproof	GF2	• Optional Code: VE, VR	• Use: -G, -W, -H • Cable Entry: 0 (JIS G1/2) • Communication and I/O: Type P, Q, R, S, T, P0 • Optional Code: EC, CS, RW, GAN
EAC Flameproof with Intrinsically Safe output	GJ2	• Communication and I/O: Type P, Q, R, S, T • Transmitter Wiring Terminal: 2 • Optional Code: VE, VR	• Use: -G, -W, -H • Construction: D, E, G (Remote Sensor) • Cable Entry: 0 (JIS G1/2) • Optional Code: EC, CS, RW, GAN
EAC Flameproof with Intrinsically Safe output, FOUNDATION Fieldbus	GT2	• Communication and I/O: Type F0 • Transmitter Wiring Terminal: 2 • Optional Code: VE, VR	• Use: -G, -W, -H • Construction: D, E, G (Remote Sensor) • Cable Entry: 0 (JIS G1/2) • Optional Code: EC, CS, RW, GAN
Japan Flameproof	JF5	• Cable Entry: 4 (ISO M20) • Optional Code: V5#	• Use: -G, -W, -H • Process Connection: C## • Cable Entry: 0 (JIS G1/2), 2 (ASME 1/2NPT) • Communication and I/O: Type P, Q, R, S, T, P0 • Display (Integral Flowmeter, Transmitter): N (Without Display) • Optional Code: EC
NEPSI Flameproof	NF2	—	• Use: -G, -W, -H • Cable Entry: 0 (JIS G1/2) • Communication and I/O: Type P, Q, R, S, T, P0 • Optional Code: EC
NEPSI Flameproof with Intrinsically Safe output	NJ2	• Communication and I/O: Type P, Q, R, S, T • Transmitter Wiring Terminal: 2	• Use: -G, -W, -H • Construction: D, E, G (Remote Sensor) • Cable Entry: 0 (JIS G1/2) • Optional Code: EC
Korea Flameproof	PF2	—	• Use: -G, -W, -H • Cable Entry: 0 (JIS G1/2) • Communication and I/O: Type P, Q, R, S, T, P0 • Optional Code: EC • Optional Code: JC
INMETRO Flameproof (Brazil)	UF2	—	• Use: -G, -W, -H • Cable Entry: 0 (JIS G1/2) • Communication and I/O: Type P, Q, R, S, T, P0 • Optional Code: EC, CS, JC

All Rights Reserved. Copyright © 2017, Yokogawa Electric Corporation

■ OPTIONAL CODE

•Application, Usage, and Operating Function

●: Applicable ○: Applicable (except Explosion Protection) —: Not Applicable

Item	Specification and Applicable Condition	Applicable Model						Code
		General-purpose Explosion protection		Submersible	Hygienic Hygienic with Explosion protection		General-purpose Explosion protection	
		Integral Flowmeter	Remote Sensor	Remote Sensor	Integral Flowmeter	Remote Sensor	Remote Transmitter	
Mirror Finished PFA (for adhesive fluid)	Finish the inner surface of the PFA lining (sizes 15 to 400 mm (0.5 to 16 in.), except for high pressure type) to a mirror finish. The Ra is average of measured values on several points. Sizes 15 to 200 mm (0.5 to 8 in.) : Ra 0.05 to 0.15 µm Sizes 250 to 400 mm (10 to 16 in.) : Ra 0.05 to 0.25 µm	●	●	●	●	●	—	**PM**
Mirror Finished Ceramics (for adhesive fluid)	Finish the inner surface of the ceramics tube (5 to 200 mm (0.2 to 8 in.)) to a mirror finish with Ra 0.1 µm or less. The Ra is average of measured values on several points.	●	●	—	—	—	—	**CM**
Vent Hole (for permeable fluid)	For permeable fluid applications (e.g. nitric acid, hydrofluoric acid, high temperature sodium hydroxide, black liquor etc.). A vent hole is provided for letting fluid permeated between the lining and the measuring pipe escape. Applicable for flange type of PFA lining except for high pressure type.	●	●	—	—	—	—	**H**
DC Noise Cut Circuit (for electrolytic bath)	Built-in DC noise cut circuit. It works effectively when the size is 15 mm (0.5 in.) or more and fluid conductivity is 50 µS/cm or more. Empty pipe detection, electrode adhesion diagnosis, electrode potential measurement, and wetted resistance measurement function can not be used. For remote transmitter, it must be combined with remote sensor of size 15 mm (0.5 in.) or more.	●	—	—	●	—	●	**ELC**
Potting Terminal Box with Cable (For district heating and cooling or condensation-proof)	Urethane resin potting is applied in the terminal box of a remote sensor. Signal and excitation cables (when optional code L### is not selected, cable length is each 30 m) are pre-wired and waterproof glands with union joints are attached at factory. For cable entry, selection of JIS G1/2 female thread is necessary. When optional code DHC is selected, the optional code of plastic and waterproof glands can not be selected.	—	○	—	—	○	—	**DHC**
Signal and Excitation Cable Length	Change the length of signal cable and excitation cable pre-wired for a remote sensor of Submersible or one with optional code DHC. Specify the cable length in the "###" with the numerical value three digits (001 to 200) as multiple of 1 meter (e.g. 001, 002, or 005) for a length up to 5 m, as multiple of 5 meters up to 100 m (e.g. 010, 020, or 100), or as multiple of 10 meters up to 200 m (e.g. 110, 120, or 200). The maximum cable length is 100 m in combination with the AXG4A transmitter, and 200 m in combination with the AXG1A or AXFA11 transmitter. When optional code L### is not selected, a 30-meter length cable is pre-wired.	—	○	●	—	○	—	**L###**
Wafer Type Replacement Model	This specification provides AXG with the lay length that are compatible with previous models(ADMAG, YEWMAG Series) in wafer type. Please be sure to select the option code GAN at the same time. For details on dimensions, please refer to the DIMENSIONAL DRAWINGS.	●	●	●	—	—	—	**RW**

All Rights Reserved. Copyright © 2017, Yokogawa Electric Corporation

●Application, Usage, and Operating Function (Continued)

●: Applicable ○: Applicable (except Explosion Protection) —: Not Applicable

Item	Specification and Applicable Condition	Applicable Model						Code
		General-purpose Explosion protection		Submersible	Hygienic Hygienic with Explosion protection		General-purpose Explosion protection	
		Integral Flowmeter	Remote Sensor	Remote Sensor	Integral Flowmeter	Remote Sensor	Remote Transmitter	
Oil Prohibited Use	Electrodes, linings, grounding devices (grounding rings plate type, metal hat grounding ring, grounding rings electrode type, built-in grounding electrodes), gaskets, and piping adapters and connection parts (for Hygienic) of sizes 2.5 to 400 mm (0.1 to 16 in.) are assembled and packed with polyethylene after being cleaned with water and acetone and dried with air. The label "OIL FREE" is affixed.	●	●	—	●	●	—	**K1**
Oil Prohibited Use with Dehydration	Electrodes, linings, and grounding devices (grounding rings plate type, metal hat grounding ring, grounding rings electrode type, built-in grounding electrodes) of sizes 2.5 to 400 mm (0.1 to 16 in.) are assembled and packed with polyethylene including desiccants after being cleaned with water and acetone and dried with air. The label "OIL & WATER FREE" is affixed.	●	●	—	—	—	—	**K5**
Mass Unit Setting	The flow rate calculation is performed in mass unit. In addition to fluid density, specify span flow rate, pulse weight, and totalization weight in mass unit. For specifying procedures, read “Ordering Information”. For remote sensor, specified parameters are set in the transmitter that is ordered in combination.	●	●	●	●	●	—	**MU**
Signal Down on Failure	The current output signal is set as follows when shipped. Output signal at CPU failure or alarm occurrence: 2.4 mA (–10 %) or less (The standard setting is 21.6 mA (110%) or more at CPU failure or alarm occurrence.) Not with Communication and I/O code M0, M2, F0, G0, P0.	●	—	—	●	—	●	**C1**
Signal Down on Failure (NAMUR NE 43 Compliant)	The current output signal is set as follows when shipped. Output signal limits: 3.8 to 20.5 mA Output signal at CPU failure or alarm occurrence: Low: 2.4 mA (–10%) or less Not with Communication and I/O code M#, F0, G0, P0.	●	—	—	●	—	●	**C2**
Signal Up on Failure (NAMUR NE 43 Compliant)	The current output signal is set as follows when shipped. Output signal limits: 3.8 to 20.5 mA Output signal at CPU failure or alarm occurrence: High: 21.6 mA (110%) or more Not with Communication and I/O code M#, F0, G0, P0.	●	—	—	●	—	●	**C3**

All Rights Reserved. Copyright © 2017, Yokogawa Electric Corporation

●Application, Usage, and Operating Function (Continued)

●: Applicable ○: Applicable (except Explosion Protection) —: Not Applicable

Item	Specification and Applicable Condition	Applicable Model						Code
		General-purpose Explosion protection		Submersible	Hygienic Hygienic with Explosion protection		General-purpose Explosion protection	
		Integral Flowmeter	Remote Sensor	Remote Sensor	Integral Flowmeter	Remote Sensor	Remote Transmitter	
Enhanced Dual Frequency Excitation Type	The "Enhanced Dual Frequency Excitation Method" can be used. For difficult applications such as for high concentration slurries or low conductivity fluid, extremely stable measurements can be realized. The meter factor for the enhanced dual frequency excitation obtained by flow calibration is inscribed on the Integral Flow Meter or Remote Sensor name plate and set into the combined Remote Transmitter in addition to the meter factor for the standard dual frequency excitation. Applicable Specifications: • Size: 25 to 200 mm (1 to 8 in.) • Use: -G, -W, -H • Construction: A, E, G • Accuracy: B • Communication and I/O: HART, BRAIN Not applicable with the following optional code: • JC (Flow Calibration in Japan) To use the Enhanced Dual Frequency Excitation with a remote type, HF2 must be added to both a Sensor and a Transmitter. *The AXG4A adds a Dual Frequency Excitation. When used in combination with a remote sensor for flow calibration, the transmitter is shipped with both meter factors for Dual Frequency Excitation and Enhanced Dual Frequency Excitation.	○	○	○	○	○	○	**HF2**
microSD Card	A microSD card slot is added to the display unit, and a microSD card (capacity 1 GB, format FAT 16) is inserted when shipped. When using parameter store / restore function with microSD card, and/or data logging function, specify optional code MC. Be careful that the microSD card slot is not mounted unless optional code MC is specified.	●	—	—	●	—	●	**MC**
CE Marking	CE marking is indicated on the nameplate. When a flowmeter is used in the countries where CE marking is required, specify optional code EC. Optional code EC cannot be applicable for AXG500. Applicable for the following process connection codes. AA#, AE#, BA#, BE#, CA#, CE#, DE#, GU#, H##(*), J##(*), K##, PA#, PE# *: It can not be combined with optional code W2. Not applicable with the following specifications: • Optional code: 3A (3-A Sanitary Certification)	●	●	●	●	●	●	**EC**
NAMUR NE21	Compliant to NAMUR NE21 under span setting of 0.5 m/s or more in terms of flow velocity. For specifiable span, read "Ordering Information". Combination with optional code EC (CE marking) is necessary. Not with Communication and I/O code M#, F0, G0, P0.	●	—	—	●	—	●	**E21**
Canada Domestic Sales	Compliant to CSA standards. Integral flowmeter and remote sensor (for size 2.5 to 400 mm) are registered with CRN in Canada. When the product is used in Canada, it is mandatory to comply with these standards. Specify option code CS. Optional code CS cannot be applicable for AXG500. Applicable for the following process connection codes. AA#, BA#, CA#, EA4, H##(*), J##(*), K##, PA# *: It can not be combined with optional code W2. Not applicable with the following specifications: • Lining: C (Ceramics Tube) • Optional code: EC (CE Marking) • Optional code: VR, VE (EAC Marking) • Optional code: JC (Flow Calibration in Japan) • Optional code: RW (Wafer Type Replacement Model)	●	●	●	●	●	●	**CS**

All Rights Reserved. Copyright © 2017, Yokogawa Electric Corporation

●Application, Usage, and Operating Function (Continued)

●: Applicable ○: Applicable (except Explosion Protection) —: Not Applicable

Item	Specification and Applicable Condition	Applicable Model						Code
		General-purpose Explosion protection		Submersible	Hygienic Hygienic with Explosion protection		General-purpose Explosion protection	
		Integral Flowmeter	Remote Sensor	Remote Sensor	Integral Flowmeter	Remote Sensor	Remote Transmitter	
Japan Domestic Sales	Identifies the final destination as Japan. Mandatory when the final destination is Japan. Not applicable when the final destination is not in Japan.	●	●	●	●	●	●	**PJ**
3-A Sanitary Certification	Compliant to 3-A sanitary standards. Use EPDM rubber gasket for 3-A standard. Process connection code: HAB For remote type, only AXG4A remote transmitter can be combined. Nominal size:15 mm to 100 mm, except 32 mm Not applicable with the following specifications: • Optional code: EC (CE Marking) • Optional code: VR, VE (EAC Marking) • Optional code: JC (Flow Calibration in Japan)	—	—	—	○	○	○	**3A**
EAC Approval and Russian Pattern Approval Marking	EAC approval marking and Russian pattern approval marking are indicated on the nameplate. When the product is used in Russian Federation, specify optional code VR. Not applicable with the following specifications: • Size: 500 mm • Communication and I/O: P0 (EtherNet/IP) • Optional code: EC (CE Marking) • Optional code: CS (Canada Domestic Sales) • Optional code: 3A (3-A Sanitary Certification) • Optional code: JC (Flow Calibration in Japan) • Optional code: WCD (Marine Approval) • Optional code: RW (Wafer Type Replacement Model)	●	●	●	●	●	●	**VR**
EAC Approval Marking without Russian Pattern Approval Marking	EAC approval marking is indicated on the nameplate. (no Russian pattern approval marking). When the product is used in EEU except for Russian Federation, specify optional code VE. Not applicable with the following specifications: • Size: 500 mm • Communication and I/O: P0 (EtherNet/IP) • Optional code: EC (CE Marking) • Optional code: CS (Canada Domestic Sales) • Optional code: 3A (3-A Sanitary Certification) • Optional code: JC (Flow Calibration in Japan) • Optional code: WCD (Marine Approval) • Optional code: RW (Wafer Type Replacement Model)	●	●	●	●	●	●	**VE**
SIL Certification	Compliant to the functional safety standard IEC61508. When the product is used in a safety instrumented system, specify optional code SL. This product can be used in safety instrumented systems up to SIL2 in simplex configuration and SIL3 in redundant configuration. Not applicable with the following specifications: • Communication and I/O: M#, F0, G0, P0 • Optional code: ELC (DC noise cut circuit)	●	—	—	●	—	●	**SL**
Marine Approval	For details, refer to the general specifications (GS 01E22A21-04EN) Not applicable with the following specifications: • Optional code: RW (Wafer Type Replacement Model)	●	●	●	—	—	●	**WCD**

All Rights Reserved. Copyright © 2017, Yokogawa Electric Corporation

●Application, Usage, and Operating Function (Continued)

●: Applicable ○: Applicable (except Explosion Protection) —: Not Applicable

Item	Specification and Applicable Condition	Applicable Model						Code
		General-purpose Explosion protection		Submersible	Hygienic Hygienic with Explosion protection		General-purpose Explosion protection	
		Integral Flowmeter	Remote Sensor	Remote Sensor	Integral Flowmeter	Remote Sensor	Remote Transmitter	
TSG (China Pressure Standard) Certification (Pressure Grade GC1)	Compliant to the TSG (Pressure Grade GC1) of China. Applicable Specifications: • Size: 50 to 500 mm (2 to 20 in.) • Process Connection: AA#, AE#, BA#, BE#, CA#, CE#, EA4, PA#, PE# Not applicable with the following specification: • Lining: C (Ceramic Tube)	●	●	●	—	—	—	**TS1**
TSG (China Pressure Standard) Certification (Pressure Grade GC2)	Compliant to the TSG (Pressure Grade GC2) of China. Liquid penetrant test is not performed. Applicable Specifications: • Size: 50 to 500 mm (2 to 20 in.) • Process Connection: AA#, AE#, BA#, BE#, CA#, CE#, EA4, PA#, PE# Not applicable with the following specifications: • Lining: C (Ceramic Tube) • Optional Code:PTC(TSG (China Pressure Standard) Liquid Penetrant Test)	●	●	●	—	—	—	**TS2**

●Tag Plate and Mounting Bracket

●: Applicable ○: Applicable (except Explosion Protection) —: Not Applicable

Item	Specification and Applicable Condition	Applicable Model						Code
		General-purpose Explosion protection		Submersible	Hygienic Hygienic with Explosion protection		General-purpose Explosion protection	
		Integral Flowmeter	Remote Sensor	Remote Sensor	Integral Flowmeter	Remote Sensor	Remote Transmitter	
Stainless Steel Tag Plate	The pendant type tag plate (stainless steel 304) is wired around the flowmeter neck. Select optional code SCT when necessary in addition to that on the nameplate, on which the Tag No. is inscribed. Plate size (Height x Width): Approx. 12.5 mm x 40 mm (4.92 in. x 15.7 in.)	●	●	●	●	●	●	**SCT**
Stainless Steel Mounting Bracket	Change the material of the remote transmitter mounting bracket, from carbon steel to stainless steel 304.	—	—	—	—	—	●	**SB**

All Rights Reserved. Copyright © 2017, Yokogawa Electric Corporation

●Piping Parts

●: Applicable ○: Applicable (except Explosion Protection) —: Not Applicable

Item	Specification and Applicable Condition	Applicable Model					Code
		General-purpose Explosion protection		Submersible	Hygienic Hygienic with Explosion protection		
		Integral Flowmeter	Remote Sensor	Remote Sensor	Integral Flowmeter	Remote Sensor	
Bolts, Nuts and Gaskets (Type C)	The mounting bolts, nuts and gaskets of wafer type (process connection code: AJ1, AJ2, AA1) are supplied. For PFA lining and ceramics tube, when adopting the optional code BSC together with the optional earth ring plate, there is a risk of liquid leakage due to the difference in elasticity, so between the detector and the earth ring, also using a gasket of hardness equivalent to chloroprene rubber is recommended. Bolt: Stainless steel 304 Nut: Stainless steel 304 Gasket(*): Chloroprene rubber (CR), thickness: 3 mm (0.12 in.) *: The allowable temperature and pressure is equivalent to that of Valqua #2010 series.	●	●	●	—	—	**BSC**
Bolts, Nuts and Gaskets (Type F)	The mounting bolts, nuts and gaskets of wafer type (process connection code: AJ1, AJ2, AA1) are supplied. Bolt: Stainless steel 304 Nut: Stainless steel 304 Gasket(*): PTFE-sheathed non-asbestos joint sheet, thickness: 3 mm (0.12 in.) *: The allowable temperature and pressure is equivalent to that of Valqua #7030 (S) series.	●	●	●	—	—	**BSF**
Hygienic Connection Parts	Connection parts for hygienic are supplied. Optional code W2 can be selected with the following process connection codes. HJA: Clamp: Stainless steel SCS13 Ferrule: Size 15 mm (0.5 in.): Stainless steel 316L Sizes 25 to 125 mm (1 to 5 in.): Stainless steel 304 Gasket: Ethylene propylene diene rubber (EPDM) (*) HJB: Clamp: Stainless steel SCS13 Ferrule: Stainless steel 316L Gasket: Ethylene propylene diene rubber (EPDM) (*) *: The gasket material is silicone rubber, when size 125 mm (5 in.) or optional code GH is selected.	—	—	—	●	●	**W2**

All Rights Reserved. Copyright © 2017, Yokogawa Electric Corporation

●Grounding Device

Grounding devices are attached at factory.
For the applicable condition of grounding devices and gaskets, see the separate table.

●: Applicable ○: Applicable (except Explosion Protection) —: Not Applicable

Item	Specification and Applicable Condition	Applicable Model					Code
		General-purpose Explosion protection		Submersible	Hygienic Hygienic with Explosion protection		
		Integral Flowmeter	Remote Sensor	Remote Sensor	Integral Flowmeter	Remote Sensor	
Grounding Rings (Plate Type L)	Material: Stainless Steel 316L, Thin Type(*). Thickness: 1 mm (0.04 in.) for sizes 2.5 to 200 mm (0.1 to 8 in.) 2 mm (0.08 in.) for sizes 250 to 400 mm (10 to 16 in.)	●	●	●	—	—	**GRL**
Grounding Rings (Plate Type N)	Material: Stainless Steel 316L, Thick Type(*). Thickness: Except for high pressure type (ASME Class 600 flange): 3 mm (0.12 in.) for sizes 2.5 to 400 mm (0.1 to 16 in.) 4 mm (0.16 in.) for size 500 mm (20 in.) For high pressure type (ASME Class 600 flange): 8.5 mm (0.33 in.) for size 25 mm (1 in.) 10.5 mm (0.41 in.) for sizes 40 to 100 mm (1.5 to 4 in.).	●	●	●	—	—	**GRN**
Grounding Rings (Plate Type H)	Material: Nickel Alloy, Thin Type(*). Thickness: 1 mm (0.04 in.) for sizes 2.5 to 200 mm (0.1 to 8 in.) 2 mm (0.08 in.) for sizes 250 to 400 mm (10 to 16 in.)	●	●	●	—	—	**GRH**
Grounding Rings (Plate Type J)	Material: Nickel Alloy, Thick Type(*). Thickness: 3 mm (0.12 in.) for sizes 2.5 to 400 mm (0.1 to 16 in.) 4 mm (0.16 in.) for size 500 mm (20 in.)	●	●	●	—	—	**GRJ**
Grounding Rings (Plate Type V)	Material: Titanium, Thin Type(*). Thickness: 1 mm (0.04 in.) for sizes 2.5 to 200 mm (0.1 to 8 in.) 2 mm (0.08 in.) for sizes 250 to 400 mm (10 to 16 in.)	●	●	●	—	—	**GRV**
Grounding Rings (Plate Type W)	Material: Titanium, Thick Type(*). Thickness: 3 mm (0.12 in.) for sizes 2.5 to 400 mm (0.1 to 16 in.)	●	●	●	—	—	**GRW**
Metal Hat Grounding Ring (Upstream Side) Grounding Ring (Downstream Side)	Attach the metal hat grounding ring on upstream side and the grounding ring on downstream side. Material: Stainless Steel 316L Thickness: 3 mm (0.12 in.) for sizes 80 to 400 mm (3 to 16 in.)	●	●	●	—	—	**GSN**
Metal Hat Grounding Rings (Upstream and Downstream Side)	Attach the metal hat grounding rings on both upstream and downstream sides. Material: Stainless Steel 316L Thickness: 3 mm (0.12 in.) for sizes 80 to 400 mm (3 to 16 in.)	●	●	●	—	—	**GDN**
Grounding Ring For Wafer Type Replacement Model	Attach the grounding rings for wafer type replacement model. This ensures the AXG have the lay length compatible with previous models (ADMAG, YEWMAG Series). Please be sure to select the option code RW at the same time. For details on dimensions, please refer to the DIMENSIONAL DRAWINGS. Material: Stainless Steel F316L Thickness:please check the DIMENSIONAL DRAWINGS.	●	●	●	—	—	**GAN**
Grounding Rings (Electrode Type P)	Material: Platinum-Iridium Width: 14 mm (0.55 in.) for sizes 2.5 to 15 mm (0.1 to 0.5 in.), sizes 25 to 125 mm (1 to 5 in.) with process connection Wafer (A##). 14.5 mm (0.57 in.) for sizes 25 to 125 mm (1 to 5 in.) with process connection Flange (B##, C##, E##, P##). 17 mm (0.67 in.) for sizes 150 to 200 mm (6 to 8 in.)	●	●	●	—	—	**GRP**

All Rights Reserved. Copyright © 2017, Yokogawa Electric Corporation

●Grounding Device (Continued)

●: Applicable ○: Applicable (except Explosion Protection) —: Not Applicable

Item	Specification and Applicable Condition	Applicable Model					Code
		General-purpose Explosion protection		Submersible	Hygienic Hygienic with Explosion protection		
		Integral Flowmeter	Remote Sensor	Remote Sensor	Integral Flowmeter	Remote Sensor	
Grounding Rings (Electrode Type T)	Material: Tantalum Width: 14 mm (0.55 in.) for sizes 2.5 to 15 mm (0.1 to 0.5 in.), sizes 25 to 125 mm (1 to 5 in.) with process connection Wafer (A##) 14.5 mm (0.57 in.) for sizes 25 to 125 mm (1 to 5 in.) with process connection Flange (B##, C##, E##, P##) 17 mm (0.67 in.) for sizes 150 to 200 mm (6 to 8 in.)	●	●	●	—	—	**GRT**
Built-in Grounding Electrodes (Type P)	Material: Platinum-Iridium For electrode material selected by the suffix code, selection of platinum-iridium is necessary.	●	●	●	—	—	**GBP**
Built-in Grounding Electrodes (Type T)	Material: Tantalum For electrode material selected by the suffix code, selection of tantalum is necessary.	●	●	●	—	—	**GBT**

*: Either thin type or thick type for the grounding rings can be selected when the material is Stainless Steel 316L, Nickel Alloy, or Titanium. If the flange pressure ratings is ASME Class 300, EN PN 40 etc. for high fluid pressure and the tightening torque is high, the thick type is recommended.

Size Range by Grounding Device

Grounding Ring Plate:

Stainless Steel 316L
- 2.5 to 500 mm, 0.1 to 20 in. (for PFA Lining)
- 15 to 200 mm, 0.5 to 8 in. (for Ceramics Tube)

Nickel Alloy
- 2.5 to 500 mm, 0.1 to 20 in. (for PFA Lining)
- 15 to 200 mm, 0.5 to 8 in. (for Ceramics Tube)

Titanium
- 2.5 to 400 mm, 0.1 to 16 in. (for PFA Lining)
- 15 to 200 mm, 0.5 to 8 in. (for Ceramics Tube)

Metal Hat Grounding Ring:

Stainless Steel 316L
- 80 to 400 mm, 3to 16 in. (for PFA Lining, Flange type)

Grounding Ring For Wafer Type Replacement Model:

Stainless Steel F316L
- 25 to 200 mm, 1 to 8 in.(for PFA Lining)

Grounding Ring Electrode:

Platinum-Iridium
- 2.5 to 200 mm, 0.1 to 8 in. (for PFA Lining)
- 15 to 200 mm, 0.5 to 8 in. (for Ceramics Tube)

Tantalum
- 2.5 to 200 mm, 0.1 to 8 in. (for PFA Lining)
- 15 to 200 mm, 0.5 to 8 in. (for Ceramics Tube)

Built-in Grounding Electrode:

Platinum-Iridium
- 150 to 400 mm, 6 to 16 in. (for PFA Lining, Flange type)

Tantalum
- 150 to 400 mm, 6 to 16 in. (for PFA Lining, Flange type)

All Rights Reserved. Copyright © 2017, Yokogawa Electric Corporation

●Gasket

Grounding devices are attached at factory.
For applicable condition of grounding devices and gaskets, see the separate table.

●: Applicable ○: Applicable (except Explosion Protection) —: Not Applicable

Item	Specification and Applicable Condition	Applicable Model					Code
		General-purpose Explosion protection		Submersible	Hygienic Hygienic with Explosion protection		
		Integral Flowmeter	Remote Sensor	Remote Sensor	Integral Flowmeter	Remote Sensor	
Plastic Pipe Gaskets	Fluororubber gasket (Viton) for plastic piping such as PVC. The allowable temperature and pressure range is the same as those of Valqua #4010 with no special formulation.	●	●	●	—	—	**GA**
Plastic Pipe Acid-resistant Gaskets	Acid-resistant fluororubber gasket (Viton) for plastic piping such as PVC. The allowable temperature and pressure range is the same as those of Valqua #4010 with special formulation D2470.	●	●	●	—	—	**GC**
Plastic Pipe Alkali-resistant Gaskets	Alkali-resistant fluororubber gasket (Viton) for plastic piping such as PVC. The allowable temperature and pressure range is the same as those of Valqua #4010 with special formulation D0970.	●	●	●	—	—	**GD**
Metal Pipe Alkali-resistant Gaskets	Alkali-resistant (fluorocarbon resin containing carbon) gaskets for use with metal piping. The allowable temperature and pressure range is the same as those of Valqua #7026. Target specification • Lining: C (Ceramics Tube)	●	●	—	—	—	**GF**
Hygienic Use Silicone Rubber Gaskets	For Hygienic (sizes 15 to 25, and 40 to 125 mm (0.5 to 1, and 1.5 to 5 in.)), change the material of the gasket fixed between the measuring pipe and piping connection adapter from ethylene propylene diene rubber (EPDM)) to silicone rubber. Select optional code GH, when the fluid temperature is 120 °C (248 °F) or more (Maximum: 160 °C (320 °F)), (Except optional code 3A.)	—	—	—	●	●	**GH**

All Rights Reserved. Copyright © 2017, Yokogawa Electric Corporation

●Details: Applicable Condition for Grounding Devices and Gaskets

●: Applicable —: Not Applicable

Lining	PFA Lining																Ceramics Tube			
Process Connection	Flange												Wafer		Clamp Union Butt Weld Joint		Union Joint		Wafer	
	Except for High Pressure Type										High Pressure Type									
Size mm (inch)	2.5 to 15 (0.1 to 0.5)		25 to 125 (1 to 5)		150 to 200 (6 to 8)		250 to 400 (10 to 16)		500 (20)		25 to 100 (1 to 4)		2.5 to 200 (0.1 to 8)		15 to 125 (0.5 to 5)		2.5 to 10 (0.1 to 0.4)		15 to 200 (0.5 to 8)	
Code (Gasket) / Code (Grounding Device)	Not selected	GA GC GD	Not selected	GA GC GD	Not selected	GA GC GD	Not selected	GA GC GD	Not selected	GA GC GD	Not selected	GA GC GD	Not selected	GA GC GD	Not selected	GH	Not selected	GF	Not selected	GA GC GD GF
Not selected	●	—	●	—	●	—	●	—	●	—	—	—	●	—	●	●	●	●	●	—
GRL	●	—	●	—	●	—	●*1	—	—	—	—	—	●	—	—	—	—	—	—	—
GRN	—	●	●	●	●	●	●*1	—	●	—	●	—	—	●	—	—	—	—	●	●
GRH	●	—	●	—	●	—	●*1	—	—	—	—	—	●	—	—	—	—	—	—	—
GRJ	—	●	●	●	●	●	●*1	—	●	—	—	—	—	●	—	—	—	—	●	●
GRV	●	—	●	—	●	—	●*1	—	—	—	—	—	●	—	—	—	—	—	—	—
GRW	—	●	●	●	●	●	●*1	—	—	—	—	—	—	●	—	—	—	—	●	●
GRP	●	●	●	●	●	●	—	—	—	—	—	—	●	●	—	—	—	—	●	●
GRT	●	●	●	●	●	●	—	—	—	—	—	—	●	●	—	—	—	—	●	●
GBP*2	—	—	—	—	●	—	●*1	—	—	—	—	—	—	—	—	—	—	—	—	—
GBT*2	—	—	—	—	●	—	●*1	—	—	—	—	—	—	—	—	—	—	—	—	—
GSN	—	—	●	—	●	—	●	—	—	—	—	—	—	—	—	—	—	—	—	—
GDN	—	—	●	—	●	—	●	—	—	—	—	—	—	—	—	—	—	—	—	—
GAN	—	—	—	—	—	—	—	—	—	—	—	—	●	●	—	—	—	—	—	—

*1: Not applicable for process connection code BE3, PE3 (EN PN25 flange) of sizes 350, 400 mm.

*2: Not applicable for process connection code BE3, PE3 (EN PN25 flange).

●Direction of Cable Entry, Cable Glands

●: Applicable ○: Applicable (except Explosion Protection) —: Not Applicable

Item	Specification and Applicable Condition	Applicable Model						Code
		General-purpose Explosion protection		Submersible	Hygienic Hygienic with Explosion protection		General-purpose Explosion protection	
		Integral Flowmeter	Remote Sensor	Remote Sensor	Integral Flowmeter	Remote Sensor	Remote Transmitter	
Cable Entry Direction Change	Rotate the transmitter of integral flowmeter or the terminal box of remote sensor and change the direction of the cable entry (+90, +180, or -90 degree). For specifying procedures, read “Ordering Information”.	●	●	●	●	●	—	**RH**
Waterproof Glands (Type G)	2 pcs. of waterproof gland, and no blanking plug. Available only for cable entry code 0 (JIS G1/2 female thread).	—	○	—	—	○	—	**EG**
Waterproof Glands (Type G2)	2 pcs. of waterproof gland, and a blanking plug. Available only for cable entry code 0 (JIS G1/2 female thread).	○	—	—	○	—	—	**EG2**
Waterproof Glands (Type G3)	3 pcs. of waterproof gland, and no blanking plug. Available only for cable entry code 0 (JIS G1/2 female thread).	○	—	—	○	—	—	**EG3**
Waterproof Glands (Type G4)	4 pcs. of waterproof gland, and a blanking plug. Available only for cable entry code 0 (JIS G1/2 female thread).	—	—	—	—	—	○	**EG4**
Waterproof Glands (Type G5)	5 pcs. of waterproof gland, and no blanking plug. Available only for cable entry code 0 (JIS G1/2 female thread).	—	—	—	—	—	○	**EG5**
Waterproof Glands (Type U)	2 pcs. of waterproof gland with union joint, and no blanking plug. Available only for cable entry code 0 (JIS G1/2 female thread).	—	○	—	—	○	—	**EU**
Waterproof Glands (Type U2)	2 pcs. of waterproof gland with union joint, and a blanking plug. Available only for cable entry code 0 (JIS G1/2 female thread).	○	—	—	○	—	—	**EU2**

All Rights Reserved. Copyright © 2017, Yokogawa Electric Corporation

●Direction of Cable Entry, Cable Glands (Continued)

●: Applicable ○: Applicable (except Explosion Protection) —: Not Applicable

Item	Specification and Applicable Condition	Applicable Model						Code
		General-purpose Explosion protection		Submersible	Hygienic Hygienic with Explosion protection		General-purpose Explosion protection	
		Integral Flowmeter	Remote Sensor	Remote Sensor	Integral Flowmeter	Remote Sensor	Remote Transmitter	
Waterproof Glands (Type U3)	3 pcs. of waterproof gland with union joint, and no blanking plug. Available only for cable entry code 0 (JIS G1/2 female thread).	○	—	—	○	—	—	**EU3**
Waterproof Glands (Type U4)	4 pcs. of waterproof gland with union joint, and a blanking plug. Available only for cable entry code 0 (JIS G1/2 female thread).	—	—	—	—	—	○	**EU4**
Waterproof Glands (Type U5)	5 pcs. of waterproof gland with union joint, and no blanking plug. Available only for cable entry code 0 (JIS G1/2 female thread).	—	—	—	—	—	○	**EU5**
Plastic Glands (Type P)	2 pcs. of plastic gland, and no blanking plug. Available only for cable entry code 0 (JIS G1/2 female thread).	—	○	—	—	○	—	**EP**
Plastic Glands (Type P2)	2 pcs. of plastic gland, and a blanking plug. Available only for cable entry code 0 (JIS G1/2 female thread).	○	—	—	○	—	—	**EP2**
Plastic Glands (Type P3)	3 pcs. of plastic gland, and no blanking plug. Available only for cable entry code 0 (JIS G1/2 female thread).	○	—	—	○	—	—	**EP3**
Plastic Glands (Type P4)	4 pcs. of plastic gland, and a blanking plug. Available only for cable entry code 0 (JIS G1/2 female thread).	—	—	—	—	—	○	**EP4**
Plastic Glands (Type P5)	5 pcs. of plastic gland, and no blanking plug. Available only for cable entry code 0 (JIS G1/2 female thread).	—	—	—	—	—	○	**EP5**
Waterproof Glands (Type W)	2 pcs. of waterproof gland with JIS G3/4 female, and no blanking plug. Available only for cable entry code 0 (JIS G1/2 female thread).	—	○	—	—	○	—	**EW**
Flameproof* gland 1 piece	1 piece of Flameproof gland with JIS G1/2 female, and 2 blanking plugs. Available only for cable entry code 4 (ISO M20×1.5 Female thread).	●	—	—	●	—	—	**V51**
Flameproof* gland 2 pcs.	2 pcs. of Flameproof gland with JIS G1/2 female and; - Integral flowmeter: a blanking plug. - Remote sensor: no blanking plug. Available only for cable entry code 4 (ISO M20×1.5 Female thread).	●	●	—	●	●	—	**V52**
Flameproof* gland 3 pcs.	3 pcs. of Flameproof gland with JIS G1/2 female and; - Remote transmitter: 2 blanking plugs. - Integral flowmeter: no blanking plug. Available only for cable entry code 4 (ISO M20×1.5 Female thread).	●	—	—	●	—	●	**V53**
Flameproof* gland 4 pcs.	4 pcs. of Flameproof gland with JIS G1/2 female, and a blanking plug. Available only for cable entry code 4 (ISO M20×1.5 Female thread).	—	—	—	—	—	●	**V54**
Flameproof* gland 5 pcs.	5 pcs. of Flameproof gland with JIS G1/2 female, and no blanking plug. Available only for cable entry code 4 (ISO M20×1.5 Female thread).	—	—	—	—	—	●	**V55**

*: The thread of connection between AXG and Flameproof gland is M20, and the thread of connection between Flameproof gland and CABLE is G1/2.

All Rights Reserved. Copyright © 2017, Yokogawa Electric Corporation

●Certificate, Calibration, and Various Test

●: Applicable ○: Applicable (except Explosion Protection) —: Not Applicable

Item	Specification and Applicable Condition	Applicable Model						Code
		General-purpose Explosion protection		Submersible	Hygienic Hygienic with Explosion protection		General-purpose Explosion protection	
		Integral Flowmeter	Remote Sensor	Remote Sensor	Integral Flowmeter	Remote Sensor	Remote Transmitter	
Material Certificate	Material certificate is issued. Target Parts: PFA Lining: Measuring Pipe, Electrodes, Grounding Devices (Grounding Rings Plate Type, Metal Hat Grounding Rings, Grounding Rings Electrode Type, or Built-in Grounding Electrodes), Flanges (for flange type), Mini-flanges (for wafer type), Adapters for Hygienic Ceramics Tube: Grounding Devices (Grounding Rings Plate Type, or Grounding Rings Electrode Type), Union Joint	●	●	●	●	●	—	**M01**
Material Certificate (EN 10204-3.1)	For sizes 2.5 to 400 mm (0.1 to 16 in.), except for high pressure type, material certificates according to EN 10204 Type 3.1 with a dedicated cover is issued. The target parts are the same as optional code M01.	●	●	●	●	●	—	**E01**
Calibration Certificate (Level 2)	The Declaration and the Calibration Equipment List are issued.	●	●	●	●	●	●	**L2**
Calibration Certificate (Level 3)	The Declaration and the Primary Standard List are issued.	●	●	●	●	●	●	**L3**
Calibration Certificate (Level 4)	The Declaration and the Yokogawa Measuring Instruments Control System are issued.	●	●	●	●	●	●	**L4**
ISO/IEC 17025 calibration (Standard)*1	ISO/IEC 17025 calibration and certificates with ILAC MRA mark (Standard flow points) . Target Specifications: • Size: 15 to 400 mm (0.5 to 16 in.) • Accuracy: B (Standard) • Communication and I/O: D# (BRAIN), J# (HART) Not applicable with the following specifications: • Size: 2.5 to 10 mm, 500 mm (0.1 to 0.4 in., 20 in.) • Accuracy: C (High Grade) • Construction: D (Remote Sensor (for AXFA11)) • Communication and I/O: F0 (FOUNDATION Fieldbus), G0 (PROFIBUS PA), M# (Modbus) P0 (EtherNet/IP) • Optional code: L2, L3, L4 (Calibration Certificate) • Optional code: L11, L12 (ISO/IEC 17025 calibration) • Optional code: SC (Specified Span Five-point Calibration) • Optional code: JC (Flow Calibration in Japan) • Optional code: HF2 (Enhanced Dual Frequency Excitation Type) • Optional code: MU (Mass Unit Setting)	●	●	●	●	●	—	**L10**

All Rights Reserved. Copyright © 2017, Yokogawa Electric Corporation

●Certificate, Calibration, and Various Test (Continued)

●: Applicable ○: Applicable (except Explosion Protection) —: Not Applicable

Item	Specification and Applicable Condition	Applicable Model						Code
		General-purpose Explosion protection		Submersible	Hygienic Hygienic with Explosion protection		General-purpose Explosion protection	
		Integral Flowmeter	Remote Sensor	Remote Sensor	Integral Flowmeter	Remote Sensor	Remote Transmitter	
ISO/IEC 17025 calibration (Specified span, 2 points)*1	ISO/IEC 17025 calibration and certificates with ILAC MRA mark (2 points of user-specified flow span, around 50 and 100%) . Target Specifications: • Size: 15 to 400 mm (0.5 to 16 in.) • Accuracy: B (Standard) • Communication and I/O: D# (BRAIN), J# (HART) Not applicable with the following specifications: • Size: 2.5 to 10 mm, 500 mm (0.1 to 0.4 in., 20 in.) • Accuracy: C (High Grade) • Construction: D (Remote Sensor (for AXFA11)) • Communication and I/O: F0 (FOUNDATION Fieldbus), G0 (PROFIBUS PA), M# (Modbus) P0 (EtherNet/IP) • Optional code: L2, L3, L4 (Calibration Certificate) • Optional code: L10, L12 (ISO/IEC 17025 calibration) • Optional code: SC (Specified Span Five-point Calibration) • Optional code: JC (Flow Calibration in Japan) • Optional code: HF2 (Enhanced Dual Frequency Excitation Type)	●	●	●	●	●	—	**L11**
ISO/IEC 17025 calibration (Specified span, 4 points)*1	ISO/IEC 17025 calibration and certificates with ILAC MRA mark (4 points of user-specified flow span, around 25, 50, 75, and 100%). Target Specifications: • Size: 15 to 400 mm (0.5 to 16 in.) • Accuracy: B (Standard) • Communication and I/O: D# (BRAIN), J# (HART) Not applicable with the following specifications: • Size: 2.5 to 10 mm, 500 mm (0.1 to 0.4 in., 20 in.) • Accuracy: C (High Grade) • Construction: D (Remote Sensor (for AXFA11)) • Communication and I/O: F0 (FOUNDATION Fieldbus), G0 (PROFIBUS PA), M# (Modbus) P0 (EtherNet/IP) • Optional code: L2, L3, L4 (Calibration Certificate) • Optional code: L10, L11 (ISO/IEC 17025 calibration) • Optional code: SC (Specified Span Five-point Calibration) • Optional code: JC (Flow Calibration in Japan) • Optional code: HF2 (Enhanced Dual Frequency Excitation Type) • Optional code: MU (Mass Unit Setting)	●	●	●	●	●	—	**L12**
Specified Span Five-point Calibration	With the customer's specified span, the actual flow inspection of 5 points around 0, 25, 50, 75, and 100% is performed. Instead of the flow inspection at the standard flow rate of 2 m/s (6.56 ft/s), the result of flow inspection with the customer specified span is described in a test certificate (QIC). For specifiable spans, read "Ordering Information".	●	●	●	●	●	—	**SC**

All Rights Reserved. Copyright © 2017, Yokogawa Electric Corporation

●Certificate, Calibration, and Various Test (Continued)

●: Applicable ○: Applicable (except Explosion Protection) —: Not Applicable

Item	Specification and Applicable Condition	Applicable Model						Code
		General-purpose Explosion protection		Submersible	Hygienic Hygienic with Explosion protection		General-purpose Explosion protection	
		Integral Flowmeter	Remote Sensor	Remote Sensor	Integral Flowmeter	Remote Sensor	Remote Transmitter	
Flow Calibration in Japan	The actual flow inspection is performed at Yokogawa Manufacturing Kofu Factory in Japan. The result of that flow inspection is described in a test certificate (QIC). To performe the actual flow inspection reguraly at Kofu factory, specify optional code JC. For remote type, available only when the combination of the sensor and the transmitter is ordered. In this case, specify this optional code JC for both the sensor and the transmitter. Not available when the sensor or the transmitter is ordered alone. Target Specifications: • Size: 2.5 to 400 mm (0.1 to 16 in.) • Lining: A (PFA Lining) • Accuracy: B (Standard) • Communication and I/O: D# (BRAIN), J# (HART), F0 (FOUNDATION Fieldbus) Not applicable with the following specifications: • Size: 500 mm • Explosion Protection: PF2 (Korea Flameproof), UF2 (INMETRO Flameproof) • Lining: C (Ceramics Tube) • Accuracy: C (High Grade) • Communication and I/O: G0 (PROFIBUS PA), P0 (EtherNet/IP) • Optional code: 3A (3-A Sanitary Certification) • Optional code: CS (Canada Domestic Sales) • Optional code: VR, VE (EAC Marking)	●	●	●	●	●	●	**JC**
Hydrostatic Test	The water pressure depending on the process connection is applied to the lining (measuring pipe) for 10 minutes to check that there is no leakage, and the result is described in a test certificate (QIC). For the test water pressure on each process connection, see the separate table.	●	●	●	—	—	—	**T01**
TSG (China Pressure Standard) Hydrostatic Test	The water pressure depending on the process connection is applied to the lining (measuring pipe) for 10 minutes to check that there is no deformation and leakage, and the result is described in a TSG test certificate format (QIC). For the test water pressure on each process connection, see the separate table. Be sure to select the optional code TS1 or TS2 at the same time.	●	●	●	—	—	—	**T0C**
Withstand Voltage Test (Type 1)	Withstand voltage test on remote sensor (sizes 2.5 to 400 mm (0.1 to 16 in.)) is performed, and the result is described in a test certificate (QIC). WT1: Between excitation current terminal and ground terminal: 1000 V AC for 1 minute WT2: Between excitation current terminal and ground terminal: 1500 V AC for 1 minute Between signal terminals and excitation current terminal: 1500 V AC for 1 minute	—	○	●	—	○	—	**WT1**
Withstand Voltage Test (Type 2)		—	○	●	—	○	—	**WT2**
PMI Test (Type 1)	Fluorescent X-ray analysis of nickel, chromium and molybdenum is performed on parts made of stainless steel or nickel alloy, and a test report is issued. For applicable condition, see the separate table. Target Parts: PM1: Grounding Rings (Plate Type), Metal Hat Grounding Rings PM2: Flange (Stainless steel only) PM3: Measuring Pipe	●	●	●	—	—	—	**PM1**
PMI Test (Type 2)		●	●	●	—	—	—	**PM2**
PMI Test (Type 3)		●	●	●	●	●	—	**PM3**

All Rights Reserved. Copyright © 2017, Yokogawa Electric Corporation

●Certificate, Calibration, and Various Test (Continued)

●: Applicable ○: Applicable (except Explosion Protection) —: Not Applicable

Item	Specification and Applicable Condition	Applicable Model						Code
		General-purpose Explosion protection		Submersible	Hygienic Hygienic with Explosion protection		General-purpose Explosion protection	
		Integral Flowmeter	Remote Sensor	Remote Sensor	Integral Flowmeter	Remote Sensor	Remote Transmitter	
Liquid Penetrant Test	Liquid penetrant test on welded parts of flanges (for flange type) or mini-flanges (for wafer type) is performed and a test report is issued. For applicable condition, see the separate table.	●	●	●	—	—	—	PT
TSG (China Pressure Standard) Liquid Penetrant Test	Liquid penetrant test on welded parts of flanges (for flange type) or mini-flanges (for wafer type) is performed and a TSG test certificate format (QIC) is issued. For applicable condition, see the separate table. Be sure to select the optional code TS1 or TS2 at the same time.	●	●	●	—	—	—	PTC

*1 Please confirm "ISO/IEC 17025 calibration-related confirmation list".

●Details: Water Pressure of Hydrostatic Test (Optional Code T01):

Process connection code	Process connection	Size: mm (in.)	Water pressure (MPa)
#A1	ASME Class 150	2.5 to 300 (0.1 to 12)	3.0
		350 to 500 (14 to 20)	1.5
#A2	ASME Class 300	2.5 to 50 (0.1 to 2)	6.0
		65 to 300 (2.5 to 12)	3.0
#A4	ASME Class 600	25 to 100 (1 to 4)	15.5
#E1	EN PN10	200 to 500 (8 to 20)	1.5
#E2	EN PN16	65 to 300 (2.5 to 12)	2.4
		500 (20)	1.5
#E3	EN PN25	80 to 300 (3 to 12)	3.0
		350 to 400 (14 to 16)	1.5
#E4	EN PN40	2.5 to 50 (0.1 to 2)	6.0
#G1	JIS F12	80 to 300 (3 to 12)	1.8
		350 to 400 (14 to 16)	1.5
#J1	JIS 10K	2.5 to 300 (0.1 to 12)	2.1
		350 to 400 (14 to 16)	1.5
#J2	JIS 20K	2.5 to 50 (0.1 to 2)	6.0
		65 to 300 (2.5 to 12)	3.0
#P1	JPI Class 150	2.5 to 300 (0.1 to 12)	3.0
		350 to 400 (14 to 16)	1.5
#S1	AS Table D	50 to 400 (2 to 16)	1.1
#S2	AS Table E	50 to 300 (2 to 12)	2.1
GU#	Union Joint	2.5 to 10 (0.1 to 0.4)	6.0

●Details:TSG (China Pressure Standard) Hydrostatic Test (Optional Code T0C):

Process connection code	Process connection	Size: mm (in.)	Water pressure (MPa)
#A1	ASME Class 150	50 to 300 (2 to 12)	3.0
		350 to 500 (14 to 20)	1.5
#A2	ASME Class 300	50 (2)	6.0
		65 to 300 (2.5 to 12)	3.0
#A4	ASME Class 600	50 to 100 (2 to 4)	15.5
#E1	EN PN10	200 to 500 (8 to 20)	1.5
#E2	EN PN16	65 to 300 (2.5 to 12)	2.4
		500 (20)	1.5
#E3	EN PN25	80 to 300 (3 to 12)	3.0
		350 to 400 (14 to 16)	1.5
#E4	EN PN40	50 (2)	6.0

All Rights Reserved. Copyright © 2017, Yokogawa Electric Corporation

●Details: Applicable Condition for PMI Test
○Grounding Rings (Plate Type), Metal Hat Grounding Rings, Grounding Rings For Wafer Type Replacement Model (Optional Code PM1)

●: Applicable —: Not Applicable

Lining	PFA Lining					Ceramics Tube	
Process Connection	Flange			Wafer	Clamp Union Butt Weld Joint	Union Joint	Wafer
Code (Grounding Device) / Size mm (inch)	2.5 to 65 (0.1 to 2.5)	80 to 400 (3 to 16)	500 (20)	2.5 to 200 (0.1 to 16)	15 to 125 (0.5 to 5)	2.5 to 10 (0.1 to 0.4)	15 to 200 (0.5 to 8)
Not selected	—	—	—	—	—	—	—
GRL	●	●	—	●	—	—	—
GRN	●	●	—	●	—	—	●
GRH	●	●	—	●	—	—	—
GRJ	●	●	—	●	—	—	●
GRV	—	—	—	—	—	—	—
GRW	—	—	—	—	—	—	—
GSN	—	●	—	—	—	—	—
GDN	—	●	—	—	—	—	—
GAN	—	—	—	●	—	—	—

○Flange (Optional Code PM2)

●: Applicable —: Not Applicable

Lining	PFA Lining							Ceramics Tube	
Process Connection	Flange					Wafer	Clamp Union Butt Weld Joint	Union Joint	Wafer
Size mm (inch) / Code (Process Connection)	B##	C##	D##	E##	P##	A##	H## J## K##	G##	A##
2.5 (0.1)	●	—	●	—	●	—	—	—	—
5 (0.2)	●	—	●	—	●	—	—	—	—
10 (0.4)	●	—	●	—	●	—	—	—	—
15 (0.5)	●	—	—	—	●	—	—	—	—
25 (1)	●	—	—	●	●	—	—	—	—
32 (1.25)	●	—	—	—	—	—	—	—	—
40 (1.5)	●	—	—	●	●	—	—	—	—
50 (2)	●	—	—	●	●	—	—	—	—
65 (2.5)	●	—	—	—	—	—	—	—	—
80 (3)	●	—	—	●	●	—	—	—	—
100 (4)	●	—	—	●	●	—	—	—	—
125 (5)	●	—	—	—	—	—	—	—	—
150 (6)	●	—	—	—	●	—	—	—	—
200 (8)	●	—	—	—	●	—	—	—	—
250 (10)	●	—	—	—	●	—	—	—	—
300 (12)	●	—	—	—	●	—	—	—	—
350 (14)	●	—	—	—	●	—	—	—	—
400 (16)	●	—	—	—	●	—	—	—	—
500 (20)	—	—	—	—	—	—	—	—	—

All Rights Reserved. Copyright © 2017, Yokogawa Electric Corporation

○Measuring Pipe (Optional Code PM3)

●: Applicable —: Not Applicable

Lining	PFA Lining			Ceramics Tube	
Process Connection / Size mm (inch)	Flange	Wafer	Clamp Union Butt Weld Joint	Union Joint	Wafer
2.5 (0.1)	●	●	—	—	—
5 (0.2)	●	●	—	—	—
10 (0.4)	●	●	—	—	—
15 (0.5)	●	●	●	—	—
25 (1)	●	●	●	—	—
32 (1.25)	●	●	●	—	—
40 (1.5)	●	●	●	—	—
50 (2)	●	●	●	—	—
65 (2.5)	●	●	●	—	—
80 (3)	●	●	●	—	—
100 (4)	●	●	●	—	—
125 (5)	●	●	●	—	—
150 (6)	●	●	—	—	—
200 (8)	●	●	—	—	—
250 (10)	●	—	—	—	—
300 (12)	●	—	—	—	—
350 (14)	●	—	—	—	—
400 (16)	●	—	—	—	—
500 (20)	—	—	—	—	—

●Details: Applicable Condition for Liquid Penetrant Test (Optional Code PT)

●: Applicable —: Not Applicable

Lining	PFA Lining							Ceramics Tube	
Process Connection	Flange					Wafer	Clamp Union Butt Weld Joint	Union Joint	Wafer
Code (Process Connection) / Size mm (inch)	B##	C##	D##	E##	P##	A##	H## J## K##	G##	A##
2.5 (0.1)	—	—	—	—	—	—	—	—	—
5 (0.2)	—	—	—	—	—	—	—	—	—
10 (0.4)	—	—	—	—	—	—	—	—	—
15 (0.5)	—	—	—	—	—	—	—	—	—
25 (1)	●	—	—	●	●	—	—	—	—
32 (1.25)	●	—	—	—	—	—	—	—	—
40 (1.5)	●	—	—	●	●	—	—	—	—
50 (2)	●	●	—	●	●	—	—	—	—
65 (2.5)	●	●	—	—	—	—	—	—	—
80 (3)	●	●	—	●	●	—	—	—	—
100 (4)	●	●	—	●	●	—	—	—	—
125 (5)	●	●	—	—	—	—	—	—	—
150 (6)	●	●	—	—	●	●	—	—	—
200 (8)	●	●	—	—	●	●	—	—	—
250 (10)	●	●	—	—	●	—	—	—	—
300 (12)	●	●	—	—	●	—	—	—	—
350 (14)	●	●	—	—	●	—	—	—	—
400 (16)	●	●	—	—	●	—	—	—	—
500 (20)	●	●	—	—	—	—	—	—	—

All Rights Reserved. Copyright © 2017, Yokogawa Electric Corporation

●Details: Applicable Condition for TSG (China Pressure Standard) Liquid Penetrant Test (Optional Code PTC):

●: Applicable —: Not Applicable

Lining	PFA Lining									
Process Connection	Flange								Wafer	
Code (Process Connection) / Size mm (inch)	BA#	BE#	CA#	CE#	DE#	EA4	PA#	PE#	AA#	AE#
2.5 (0.1)	—	—	—	—	—	—	—	—	—	—
5 (0.2)	—	—	—	—	—	—	—	—	—	—
10 (0.4)	—	—	—	—	—	—	—	—	—	—
15 (0.5)	—	—	—	—	—	—	—	—	—	—
25 (1)	—	—	—	—	—	—	—	—	—	—
32 (1.25)	—	—	—	—	—	—	—	—	—	—
40 (1.5)	—	—	—	—	—	—	—	—	—	—
50 (2)	●	●	●	●	—	●	●	●	—	—
65 (2.5)	●	●	●	●	—	—	—	—	—	—
80 (3)	●	●	●	●	—	●	●	●	—	—
100 (4)	●	●	●	●	—	●	●	●	—	—
125 (5)	●	●	●	●	—	—	—	—	—	—
150 (6)	●	●	●	●	—	—	●	●	●	●
200 (8)	●	●	●	●	—	—	●	●	●	●
250 (10)	●	●	●	●	—	—	●	●	—	—
300 (12)	●	●	●	●	—	—	●	●	—	—
350 (14)	●	●	●	●	—	—	●	●	—	—
400 (16)	●	●	●	●	—	—	●	●	—	—
500 (20)	●	●	●	●	—	—	—	—	—	—

All Rights Reserved. Copyright © 2017, Yokogawa Electric Corporation

●ISO/IEC 17025 calibration-related confirmation list

○Item to check regarding calibration, etc.

- Calibration values of the calibration certificate are reported as the measured values at the time we performed the calibration.
- We do not make a statement of conformity.

○Item to check regarding certificates, etc.

- The calibration certificate will be written in both Japanese and English.
- Certificates etc. cannot be duplicated and used again.
- Certificates etc. are not issued electronically.

○Confidentiality

- We promise not to disclose to anyone any business information about our customers that we learn in the course of carrying out calibration and other work.
- However, we may disclose such information to a third party at our discretion in the following cases.
  (1) When disclosing information to a accreditation body when we undergo an audit for ISO/IEC 17025 etc.
  (2) When there is an order or request from the law or a goverment agency.

○Calibration specification etc.

- ISO/IEC 17025 calibration (Complied with ISO/IEC 17025, Calibration certificate issued with ILAC MRA mark) will be performed.
- If the span flow rate unit is other than "m^3/h", the unit will be converted to "m^3/h", (see "Unit Conversion Values List (Optional Code L11, L12)").
- If the conversion result exceeds the acceptable flow rate range in "m^3/h", it will be adjusted to within the acceptable flow rate range .
- Zero adjustment will be performed before calibration.
- If no grounding ring is specified, calibration will be performed using the grounding ring from our facility.
- For hygienic and hygienic with explosion protection specifications, calibration is performed using a jig from our facility that simulates an adapter, the included adapter is not used.
- The calibration conditions for each optional code are shown in "Calibration Specifications" below.

○Calibration Specifications (Optional Code L10, L11, L12)

	Optional Code L10	Optional Code L11	Optional Code L12
Setting Span	2.0 m/s	Customer-specified Span	
Output	Frequency 0 Hz - 1 kHz		
Number of Calibration Points	3 points	2 points	4 points
Calibration Points *1, *2, *3	Around 2.0 m/s, 1.0 m/s, 0.4 m/s	Around 100%, 50% of specified span*4	Around 100%, 75%, 50%, 25% of specified span*4
Calibration Conditions	Medium: Water Medium temperature: 15°C ~ 30°C Ambient temperature: 15°C ~ 25°C		

*1 The flow rate is adjusted within a range of ±5%. For the 100% point, it is adjusted within a range of 95% ±5% so as not to exceed the upper limit.
*2 The 0.4 m/s point will be adjusted within the range of the acceptable flow rate.
*3 If the flow rate exceeds the acceptable range, it will be adjusted to within the range.
*4 The selectable flow rate span of optional codes L11, L12 are as shown in "• Selectable Span Flow Rate Range (Optional Code L11, L12)".

All Rights Reserved. Copyright © 2017, Yokogawa Electric Corporation

• Acceptable Flow Rate Range (Optional Code L10, L11, L12)

Size mm	Min. Flow Rate m^3/h	Max. Flow Rate m^3/h
15	0.26	2.80
25	0.70	10.8
32	1.80	29.0
40	1.80	29.0
50	2.90	43.0
65	7.30	121
80	7.30	121
100	11.3	183
125	26.0	389
150	26.0	389
200	46.0	635
250	104	1141
300	104	1141
350	179	1350
400	179	1350

• Selectable Span Flow Rate Range (Optional Code L11, L12)

Size mm	Selectable Span Flow Rate Range of L11		Selectable Span Flow Rate Range of L12	
	Min. Span Flow Rate m^3/h	Max. Span Flow Rate m^3/h	Min. Span Flow Rate m^3/h	Max. Span Flow Rate m^3/h
15	0.58	2.80	1.30	2.80
25	1.56	10.8	3.50	10.8
32	4.00	28.9	9.00	28.9
40	4.00	28.0	9.00	28.0
50	6.45	43.0	14.5	43.0
65	16.3	80.0	36.5	80.0
80	16.3	121	36.5	121
100	25.2	183	56.5	183
125	57.8	300	130	300
150	57.8	380	130	380
200	103	635	230	635
250	232	1000	520	1000
300	232	1141	520	1141
350	398	1200	895	1200
400	398	1350	895	1350

All Rights Reserved. Copyright © 2017, Yokogawa Electric Corporation

○Unit Conversion Values List (Optional Code L11, L12)

If the span flow rate unit is other than "m^3/h", the unit will be converted to "m^3/h", using the following conversion values.

If the conversion result exceeds the acceptable flow rate range in m^3/h, the flow rate will be adjusted to within the acceptable flow rate range and actual flow calibration will be performed.

・Volume Units

Unit	Description	Conversion Value to "m^3"
l	liter	0.001
gal(US)	US liquid gallon	0.003785412
bbl(US Oil)	US Oil barrel	0.158987295
bbl(US Beer)	US Beer barrel	0.117347765
cf	cubic feet	0.028316847

・Time Units

Unit	Description	Conversion Value to "h"
s	second	1/3600
min	minute	1/60
d	day	24

・Flow Velocity Units

If the span units are velocity, convert to volumetric flow rate using the nominal size (mm).

If the unit of length is "ft", convert it to "m" using the following:

Unit	Description	Conversion Value to "m"
ft	feet	0.3048

・Prefixes

If a prefix is added, the following values are used for conversion.

Prefix	Description	Value
M	mega	10^6
k	kilo	10^3
c	centi	10^{-2}
m	milli	10^{-3}
μ	micro	10^{-6}

All Rights Reserved. Copyright © 2017, Yokogawa Electric Corporation

■ ACCESSORIES

- Centering Device (wafer type only): 1 set
- Blanking Plug: 1 to 2 pcs.
- Gasket (sensor side): 2 sheets
- Mounting Bracket (transmitter only): 1 set
- Dedicated mounting bolt (Size 50 mm / 2 in, Submersible, JIS 20K Wafer only)

Note: Accessories differ depending on specifications to be selected. For the accessories of each optional specification, refer to the optional code table.

■ TERMINAL CONFIGURATION

Remote Sensor:

<To be wired to Remote Transmitter>

Non Explosion Protection

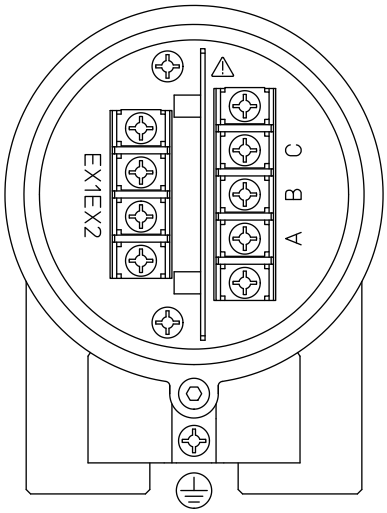

Explosion protection

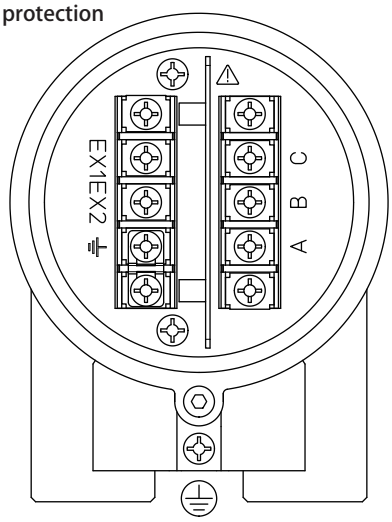

Terminal Symbol	Description
A **B** **C**	Flow Signal Output
EX1 **EX2**	Excitation Current Input
⏚	Protective Grounding (Outside of the terminal box)
⏚	Functional grounding (Only for explosion proof type)

F29.ai

Note: When submersible use or optional code DHC is selected, waterproof glands with union joints and cables are attached.

Remote Transmitter:

<To be wired to Remote Sensor>

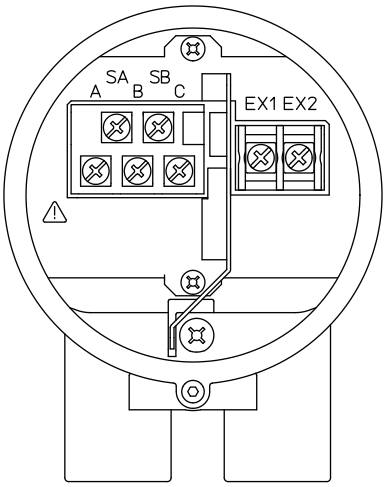

Terminal Symbol	Description
SA **SB** **A** **B** **C**	Flow Signal Input
EX1 **EX2**	Excitation Current Output

F30.ai

All Rights Reserved. Copyright © 2017, Yokogawa Electric Corporation

Integral Flowmeter and Remote Transmitter:

For Communication and I/O Suffix Code other than P0 (EtherNet/IP)

<To be wired to Power Supply and I/Os>

M4 Screw Type

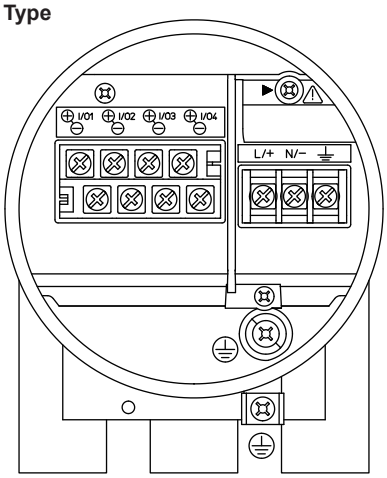

Clamp Type

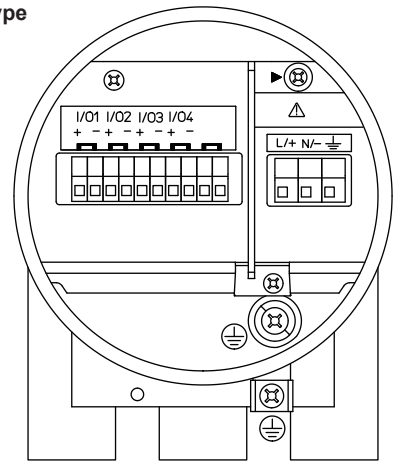

Terminal Symbol	Description
▶	Shorting Screw (Need to be fixed for normal operation)
⏚	Functional Grounding
N/- **L/+**	Power Supply
I/O4 - **I/O4 +** **I/O3 -** **I/O3 +** **I/O2 -** **I/O2 +** **I/O1 -** **I/O1 +**	Selected Input/Output (Note)
⏚	Protective Grounding (Inside and outside of the terminal box)

F31.ai

Note: Read "Functions" for the input/output signal terminals.

For Communication and I/O Suffix Code P0 (EtherNet/IP)

<To be wired to Power Supply and PORTs>

M4 Screw Type

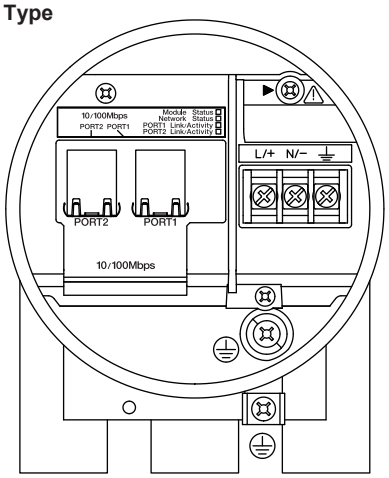

Terminal Symbol	Description
▶	Shorting Screw (Need to be fixed for normal operation)
⏚	Functional Grounding
N/- **L/+**	Power Supply
PORT1 **PORT2**	Ethernet port (RJ-45, 2 ports)
⏚	Protective Grounding (Inside and outside of the terminal box)

F32.ai

For AXG4A FOUNDATION Fieldbus type remote transmitter, read general specifications (GS 01E21F02-01E).

For AXG4A EtherNet/IP type remote transmitter, read general specifications (GS 01E21F02-02EN).

For AXG4A PROFIBUS PA type remote transmitter, read general specifications (GS 01E21F02-03EN).

For AXG1A remote transmitter, read general specifications (GS 01E22C01-01EN).

For AXFA11G remote transmitter, read general specifications (GS 01E20C01-01E).

Recommended Cable for Excitation, Power and Input/Output:

JIS C 3401 control cable equivalent
JIS C 3312 power cable equivalent
14 AWG Belden 8720 equivalent
Outer Diameter:
Without gland:
ø6.5 to ø12 mm (ø0.26 to ø0.47 in.)
With waterproof gland (optional code EG, EG#, EU, EU#, EW):
For excitation cable:
ø10.5 or ø11.5 mm (ø0.41 or ø0.45 in.)
For power and input/output cable:
ø7.5 to ø12 mm (ø0.30 to ø0.47 in.)
With plastic gland (optional code EP, EP#):
ø6 to ø12 mm (ø0.24 to ø0.47 in.)
Nominal Cross Section:
Single wire: 0.5 to 2.5 mm^2
Stranded wire: 0.5 to 1.5 mm^2

Excitation Cable for Submersible Use and Optional Code DHC:

Heat resistant vinyl resin sheath cable
Outer diameter ø10.5 mm (ø0.41 in.)

All Rights Reserved. Copyright © 2017, Yokogawa Electric Corporation

■ DIMENSIONAL DRAWINGS

(1) Integral Flowmeter, Remote Sensor

- **Wafer (PFA Lining)**

Unit: mm (approx. in.)

Size 2.5 to 15 mm (0.1 to 0.5 in.)

AXG002
AXG005
AXG010
AXG015 -□□□□□A□□A

Size Code

Process Connection Code

Lining Code

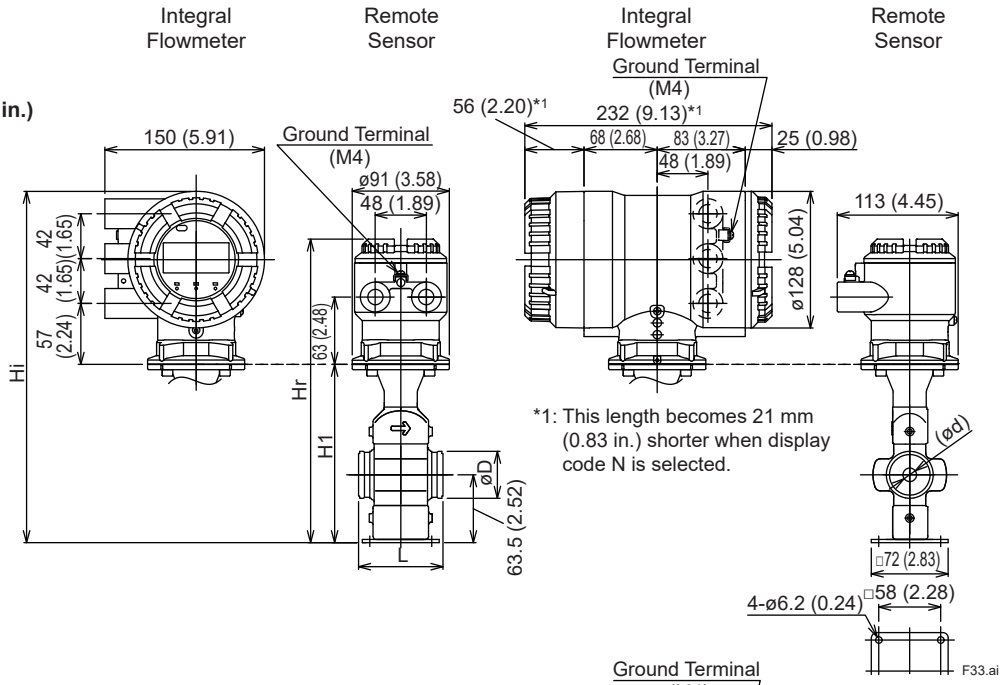

Size 25 to 125 mm (1 to 5 in.)

AXG025
AXG032
AXG040
AXG050
AXG065 -□□□□□A□□A
AXG080
AXG100
AXG125

Size Code

Process Connection Code

Lining Code

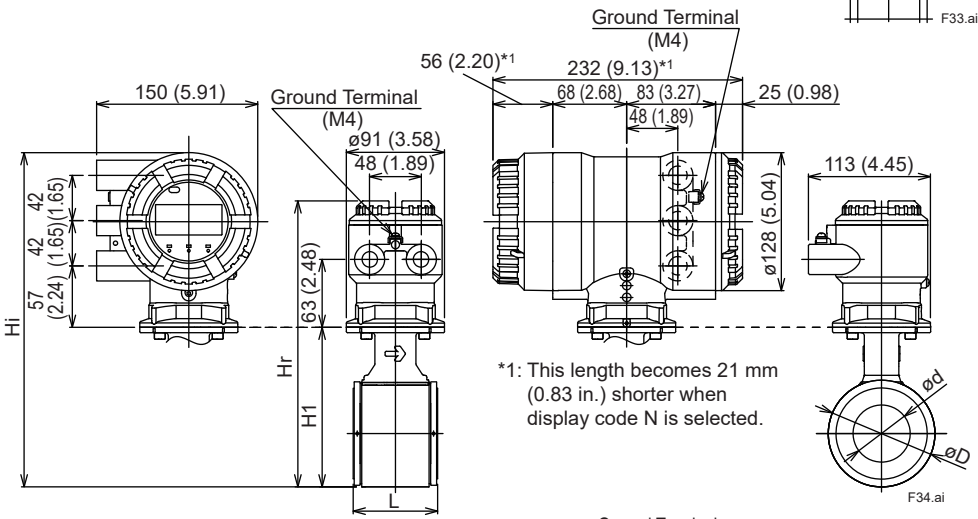

Size 150 to 200 mm (6 to 8 in.)

AXG150
AXG200 -□□□□□A□□A

Size Code

Process Connection Code

Lining Code

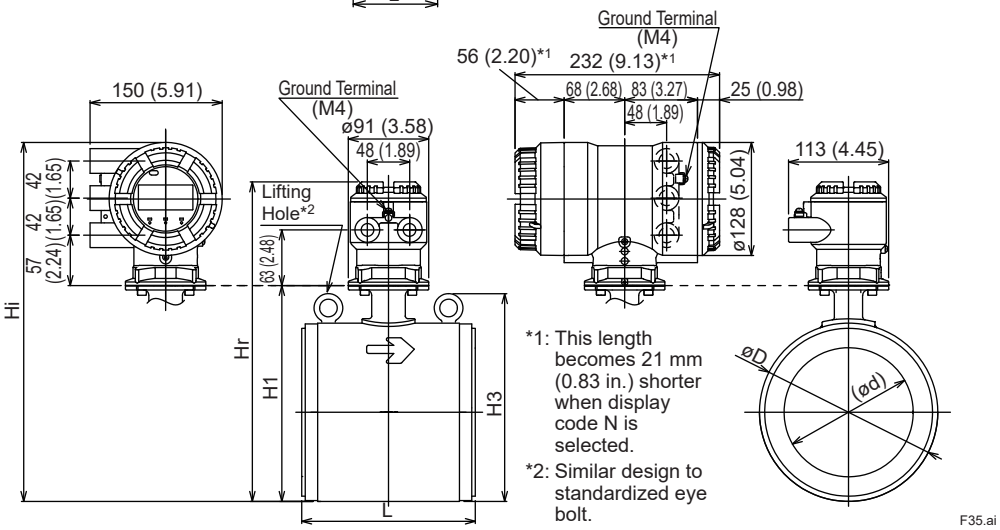

All Rights Reserved. Copyright © 2017, Yokogawa Electric Corporation

Unit: mm (approx. in.)

Model			AA1, AA2, AJ1, AJ2												AA1, AJ1	AA2, AJ2	AA1, AJ1	AA2, AJ2
	Process Connection Code		AE4								AE2				AE2	-	AE2	-
			-	-	-	-	-	-	-	-	-	-	-	-	-	-	AE1	-
			-	-	-	-	-	-	-	-	-	AG1			AG1	-	AG1	-
			AP1					-	AP1		-	AP1		-	AP1	-	AP1	-
	Size Code		002	005	010	015	025	032	040	050	065	080	100	125	150	150	200	200
	Size		2.5 (0.1)	5 (0.2)	10 (0.4)	15 (0.5)	25 (1)	32 (1.25)	40 (1.5)	50 (2)	65 (2.5)	80 (3)	100 (4)	125 (5)	150 (6)	150 (6)	200 (8)	200 (8)
	Lining Code		A	A	A	A	A	A	A	A	A	A	A	A	A	A	A	A
Remote Sensor Integral Flowmeter	Lay Length (*1)	L	79 (3.11)	79 (3.11)	79 (3.11)	79 (3.11)	58 (2.30)	68 (2.69)	68 (2.69)	78 (3.09)	98 (3.87)	118 (4.66)	148 (5.84)	198 (7.81)	197 (7.74)	197 (7.74)	247 (9.70)	247 (9.70)
	Outer Diameter	øD	44 (1.73)	44 (1.73)	44 (1.73)	44 (1.73)	68 (2.66)	73 (2.87)	86 (3.39)	99 (3.90)	117 (4.61)	129 (5.08)	155 (6.10)	183 (7.20)	202 (7.94)	202 (7.94)	252 (9.91)	252 (9.91)
	Lining Inner Diameter	ød	2 (0.09)	5 (0.19)	8 (0.30)	13 (0.51)	24 (0.93)	29 (1.13)	37 (1.44)	49 (1.94)	61 (2.40)	73 (2.87)	97 (3.82)	121 (4.76)	145 (5.72)	145 (5.72)	194 (7.65)	194 (7.65)
	Height	H1	167 (6.57)	167 (6.57)	167 (6.57)	167 (6.57)	110 (4.33)	116 (4.57)	129 (5.08)	148 (5.83)	165 (6.50)	175 (6.89)	201 (7.91)	230 (9.06)	244 (9.62)	262 (10.31)	294 (11.59)	312 (12.28)
	Height	H3	-	-	-	-	-	-	-	-	-	-	-	-	235 (9.26)	235 (9.26)	285 (11.22)	285 (11.22)
Remote Sensor	Maximum Height	Hr	284 (11.18)	284 (11.18)	284 (11.18)	284 (11.18)	227 (8.94)	233 (9.17)	246 (9.69)	265 (10.43)	282 (11.10)	292 (11.50)	318 (12.52)	347 (13.66)	362 (14.24)	380 (14.96)	412 (16.21)	430 (16.93)
	Approx. Weight, Unit: kg (lb) (*2)		2.7 (6.0)	2.7 (6.0)	2.7 (6.0)	2.7 (6.0)	2.2 (4.9)	2.4 (5.3)	2.6 (5.7)	3.2 (7.1)	3.9 (8.6)	4.6 (10.1)	6.3 (13.9)	10.5 (23.2)	15 (33.1)	15 (33.1)	22 (48.6)	22 (48.6)
Integral Flowmeter	Maximum Height	Hi	329 (12.95)	329 (12.95)	329 (12.95)	329 (12.95)	272 (10.71)	278 (10.94)	291 (11.46)	310 (12.20)	327 (12.87)	337 (13.27)	363 (14.29)	392 (15.43)	406 (16.00)	424 (16.69)	456 (17.97)	474 (18.66)
	Approx. Weight, Unit: kg (lb)		5.3 (11.7)	5.3 (11.7)	5.3 (11.7)	5.3 (11.7)	4.8 (10.6)	4.9 (10.8)	5.1 (11.2)	5.7 (12.6)	6.4 (14.1)	7.2 (15.9)	8.8 (19.4)	13.1 (28.9)	17 (37.5)	17 (37.5)	25 (55.2)	25 (55.2)
Gaskets (BSC, BSF) (*1)			+6 (+0.24)	+6 (+0.24)	+6 (+0.24)	+6 (+0.24)	+6 (+0.24)	+6 (+0.24)	+6 (+0.24)	+6 (+0.24)	+6 (+0.24)	+6 (+0.24)	+6 (+0.24)	+6 (+0.24)	+6 (+0.24)	+6 (+0.24)	+6 (+0.24)	+6 (+0.24)
Grounding rings thin type (GRL, GRH, GRV) (*1)			+2 (+0.08)	+2 (+0.08)	+2 (+0.08)	+2 (+0.08)	+2 (+0.08)	+2 (+0.08)	+2 (+0.08)	+2 (+0.08)	+2 (+0.08)	+2 (+0.08)	+2 (+0.08)	+2 (+0.08)	+2 (+0.08)	+2 (+0.08)	+2 (+0.08)	+2 (+0.08)
Grounding rings thin type (GRL, GRH, GRV) and gaskets (BSC, BSF) (*1)			+8 (+0.31)	+8 (+0.31)	+8 (+0.31)	+8 (+0.31)	+8 (+0.31)	+8 (+0.31)	+8 (+0.31)	+8 (+0.31)	+8 (+0.31)	+8 (+0.31)	+8 (+0.31)	+8 (+0.31)	+8 (+0.31)	+8 (+0.31)	+8 (+0.31)	+8 (+0.31)
Grounding rings thick type (GRN) (*1)			+6 (+0.24)	+6 (+0.24)	+6 (+0.24)	+6 (+0.24)	-	-	-	-	-	-	-	-	-	-	-	-
Grounding rings thick type (GRN) with gaskets (BSC, BSF) (*1)			+12 (+0.47)	+12 (+0.47)	+12 (+0.47)	+12 (+0.47)	-	-	-	-	-	-	-	-	-	-	-	-
Grounding rings thick type (GRN, GRJ, GRW) with gaskets (GA, GC, GD) (*1)			+8 (+0.31)	+8 (+0.31)	+8 (+0.31)	+8 (+0.31)	+10 (+0.39)	+10 (+0.39)	+10 (+0.39)	+10 (+0.39)	+10 (+0.39)	+10 (+0.39)	+10 (+0.39)	+10 (+0.39)	+12 (+0.47)	+12 (+0.47)	+12 (+0.47)	+12 (+0.47)
Grounding rings thick type (GRN, GRJ, GRW) with gaskets (GA, GC, GD) and gaskets (BSC, BSF) (*1)			+14 (+0.55)	+14 (+0.55)	+14 (+0.55)	+14 (+0.55)	+16 (+0.63)	+16 (+0.63)	+16 (+0.63)	+16 (+0.63)	+16 (+0.63)	+16 (+0.63)	+16 (+0.63)	+16 (+0.63)	+18 (+0.71)	+18 (+0.71)	+18 (+0.71)	+18 (+0.71)
Grounding rings electrode type (GRP, GRT) (*1)			+28 (+1.10)	+28 (+1.10)	+28 (+1.10)	+28 (+1.10)	+28 (+1.10)	+28 (+1.10)	+28 (+1.10)	+28 (+1.10)	+28 (+1.10)	+28 (+1.10)	+28 (+1.10)	+28 (+1.10)	+34 (+1.34)	+34 (+1.34)	+34 (+1.34)	+34 (+1.34)
Grounding rings electrode type (GRP, GRT) and gaskets (BSC, BSF) (*1)			+34 (+1.34)	+34 (+1.34)	+34 (+1.34)	+34 (+1.34)	+34 (+1.34)	+34 (+1.34)	+34 (+1.34)	+34 (+1.34)	+34 (+1.34)	+34 (+1.34)	+34 (+1.34)	+34 (+1.34)	+40 (+1.57)	+40 (+1.57)	+40 (+1.57)	+40 (+1.57)
Grounding rings electrode type (GRP, GRT) with gaskets (GA, GC, GD) (*1)			+30 (+1.18)	+30 (+1.18)	+30 (+1.18)	+30 (+1.18)	+32 (+1.26)	+32 (+1.26)	+32 (+1.26)	+32 (+1.26)	+32 (+1.26)	+32 (+1.26)	+32 (+1.26)	+32 (+1.26)	+40 (+1.57)	+40 (+1.57)	+40 (+1.57)	+40 (+1.57)
Grounding rings electrode type (GRP, GRT) with gaskets (GA, GC, GD) and gaskets (BSC, BSF) (*1)			+36 (+1.42)	+36 (+1.42)	+36 (+1.42)	+36 (+1.42)	+38 (+1.50)	+38 (+1.50)	+38 (+1.50)	+38 (+1.50)	+38 (+1.50)	+38 (+1.50)	+38 (+1.50)	+38 (+1.50)	+46 (+1.81)	+46 (+1.81)	+46 (+1.81)	+46 (+1.81)

*1: Add the value above (which is the total of both ends) to the lay length "L" when selecting optional grounding rings with/without gaskets.

*2: When submersible use or optional code DHC is selected, waterproof glands with union joints and cables are attached. When the cable length is 30-meters, add 9.5 kg (20.9 lb) to the weight in the table.

Additional weight for FM (USA) Flameproof (FF2, FJ2, FT2) and FM (Canada) Flameproof (CF2, CJ2, CT2)

Size	2.5	5	10	15	25	32	40	50	65	80	100	125	150	200
Lining Code	A	A	A	A	A	A	A	A	A	A	A	A	A	A
Wafer Approx. Additional Weigt, Unit: kg (lb)	-	-	-	-	0.1 (0.22)	0.1 (0.22)	0.2 (0.44)	0.3 (0.66)	0.5 (1.10)	0.8 (1.76)	1.3 (2.87)	1.8 (3.97)	2 (4.41)	4 (8.82)

All Rights Reserved. Copyright © 2017, Yokogawa Electric Corporation

● **Flange (PFA Lining, excluding High Pressure Type)**

Unit: mm (approx. in.)

Size 2.5 to 15 mm (0.1 to 0.5 in.)

AXG002
AXG005
AXG010
AXG015 -□□□□□■□□A

Size Code
Process Connection Code
Lining Code

■=B, D, P

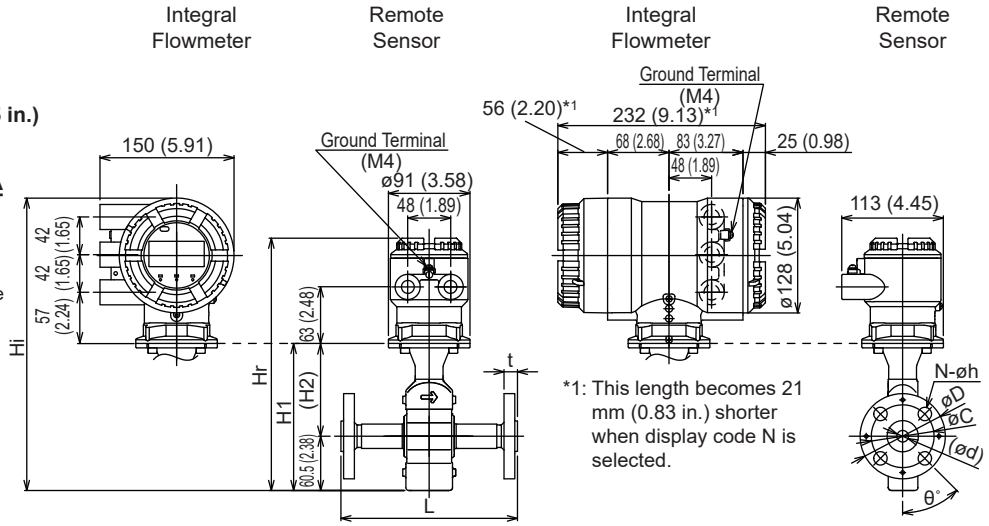

F36.ai

Size 25 to 125 mm (1 to 5 in.)

AXG025
AXG032
AXG040
AXG050
AXG065 -□□□□□■□□A
AXG080
AXG100
AXG125

Size Code
Process Connection Code
Lining Code

■=B, C, P

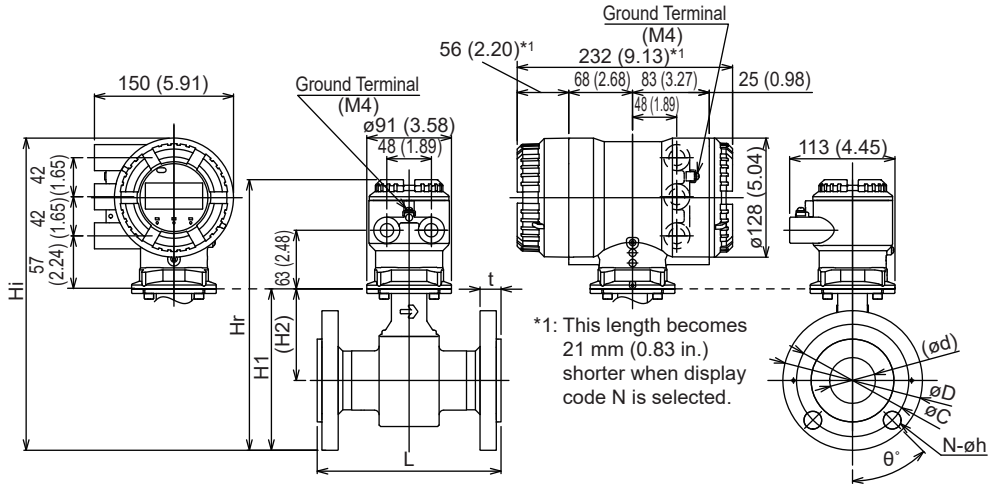

F37.ai

Size 150 to 200 mm (6 to 8 in.)

AXG150
AXG200 -□□□□□■□□A

Size Code
Process Connection Code
Lining Code

■=B, C, P

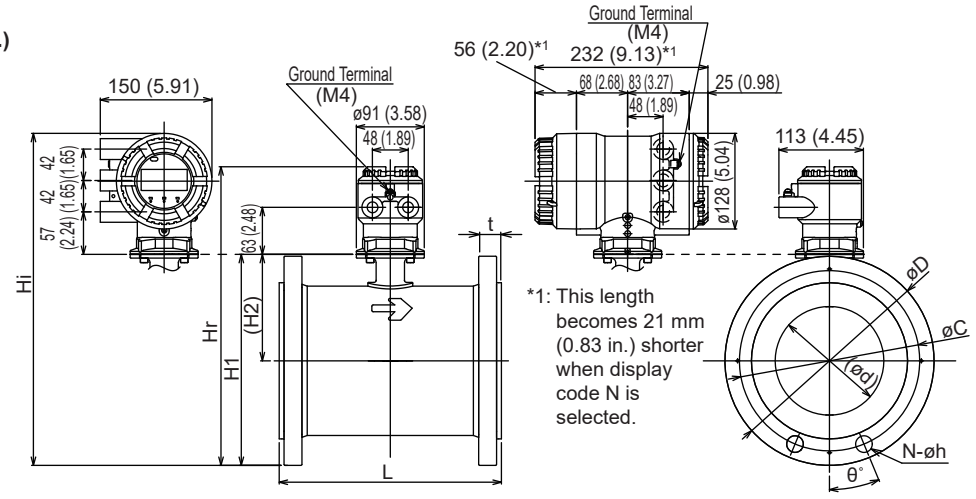

F38.ai

All Rights Reserved. Copyright © 2017, Yokogawa Electric Corporation

Unit: mm (approx. in.)

Size 250 to 400 mm (10 to 16 in.)

AXG250
AXG300 -□□□□□■□□**A**
AXG350
AXG400

Size Code

Process Connection Code

Lining Code

■=B, C, P

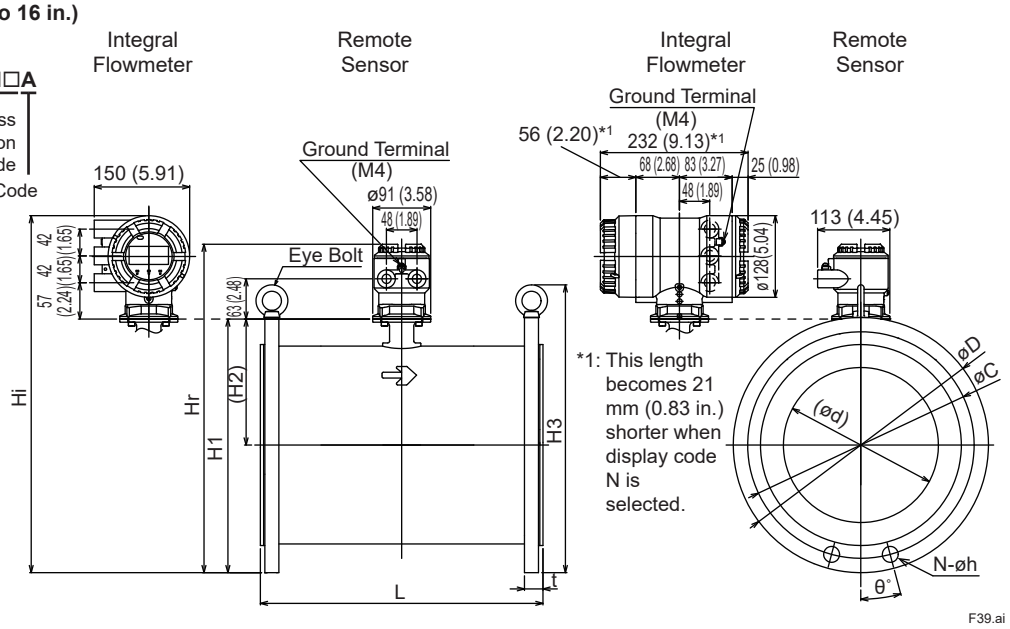

Size 500 mm (20 in.)

AXG500 -□□□□□■□□**A**

Size Code

Process Connection Code

Lining Code

■=B, C

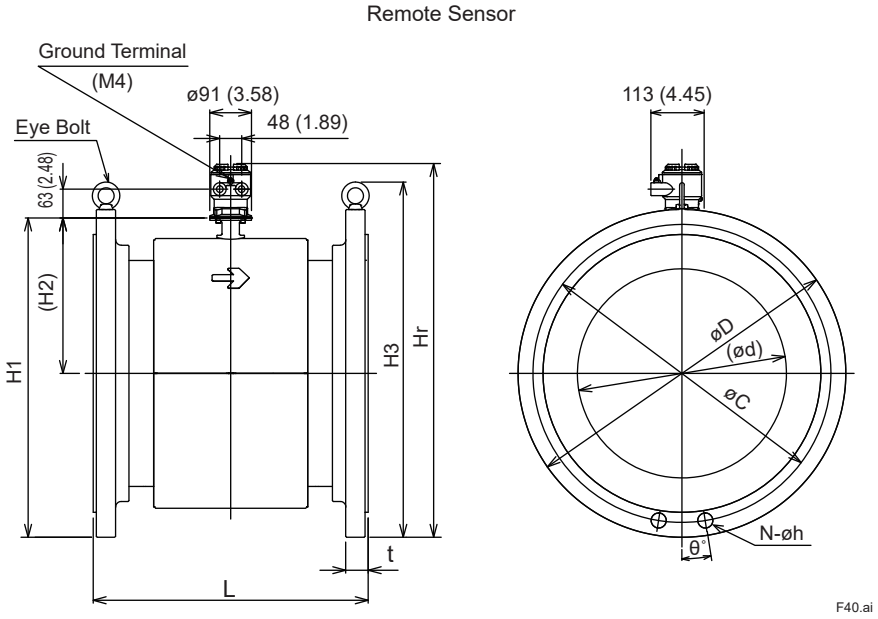

All Rights Reserved. Copyright © 2017, Yokogawa Electric Corporation

○ Flange, ASME Class 150

Unit: mm (approx. in.)

Model	Process Connection Code		BA1												CA1						
			-	-	-	-	-	-	-												
			PA1					-	PA1		-	PA1		-	PA1						-
	Size Code		002	005	010	015	025	032	040	050	065	080	100	125	150	200	250	300	350	400	500
	Size		2.5 (0.1)	5 (0.2)	10 (0.4)	15 (0.5)	25 (1)	32 (1.25)	40 (1.5)	50 (2)	65 (2.5)	80 (3)	100 (4)	125 (5)	150 (6)	200 (8)	250 (10)	300 (12)	350 (14)	400 (16)	500 (20)
	Lining Code		A	A	A	A	A	A	A	A	A	A	A	A	A	A	A	A	A	A	A
Remote Sensor Integral Flowmeter	Lay Length (*1) (*3)	L	148 (5.83)	148 (5.83)	148 (5.83)	198 (7.80)	198 (7.78)	198 (7.78)	198 (7.78)	198 (7.78)	198 (7.78)	198 (7.78)	248 (9.74)	248 (9.74)	298 (11.71)	348 (13.68)	446 (17.54)	496 (19.51)	546 (21.48)	596 (23.44)	600 (23.62)
	Flange Outer Diameter	øD	90 (3.54)	90 (3.54)	90 (3.54)	90 (3.54)	110 (4.33)	115 (4.53)	125 (4.92)	150 (5.91)	180 (7.09)	190 (7.48)	230 (9.06)	255 (10.04)	280 (11.02)	345 (13.58)	405 (15.94)	485 (19.09)	535 (21.06)	595 (23.43)	700 (27.56)
	Flange Thickness (incl. lining flare)	t	19.2 (0.76)	19.2 (0.76)	19.2 (0.76)	16.2 (0.64)	18.7 (0.74)	19.3 (0.76)	20.9 (0.82)	22.5 (0.89)	25.7 (1.01)	27.3 (1.07)	27.3 (1.07)	27.3 (1.07)	30.4 (1.20)	33.5 (1.32)	35.6 (1.40)	37.2 (1.46)	40.9 (1.61)	42.5 (1.67)	48.6 (1.91)
	Lining Inner Diameter	ød	2 (0.09)	5 (0.19)	8 (0.30)	13 (0.51)	24 (0.93)	29 (1.13)	37 (1.44)	49 (1.94)	61 (2.40)	73 (2.87)	97 (3.82)	121 (4.76)	145 (5.72)	194 (7.65)	243 (9.55)	292 (11.51)	323 (12.73)	374 (14.70)	459 (18.07)
	Bolt Circle Diameter	øC	60.3 (2.37)	60.3 (2.37)	60.3 (2.37)	60.3 (2.37)	79.4 (3.13)	88.9 (3.50)	98.4 (3.87)	120.7 (4.75)	139.7 (5.50)	152.4 (6.00)	190.5 (7.50)	215.9 (8.50)	241.3 (9.50)	298.5 (11.75)	362.0 (14.25)	431.8 (17.00)	476.3 (18.75)	539.8 (21.25)	635.0 (25.00)
	Bolt Hole Interval	θ°	45	45	45	45	45	45	45	45	45	45	22.5	22.5	22.5	22.5	15	15	15	11.25	9
	Bolt Hole Diameter	øh	15.9 (0.63)	15.9 (0.63)	15.9 (0.63)	15.9 (0.63)	15.9 (0.63)	15.9 (0.63)	15.9 (0.63)	19.1 (0.75)	19.1 (0.75)	19.1 (0.75)	19.1 (0.75)	22.2 (0.87)	22.3 (0.88)	22.3 (0.88)	25.4 (1.00)	25.4 (1.00)	28.6 (1.13)	28.6 (1.13)	31.8 (1.25)
	Number of Bolt Holes	N	4	4	4	4	4	4	4	4	4	4	8	8	8	8	12	12	12	16	20
	Height	H1	164 (6.46)	164 (6.46)	164 (6.46)	164 (6.46)	135 (5.31)	144 (5.67)	149 (5.87)	174 (6.85)	198 (7.80)	209 (8.23)	239 (9.41)	266 (10.47)	283 (11.12)	340 (13.39)	401 (15.78)	465 (18.32)	512 (20.14)	569 (22.41)	689 (27.12)
	Height	H2	104 (4.09)	104 (4.09)	104 (4.09)	104 (4.09)	80 (3.15)	86 (3.39)	86 (3.39)	99 (3.90)	108 (4.25)	114 (4.49)	124 (4.88)	138 (5.43)	143 (5.61)	168 (6.60)	198 (7.81)	223 (8.77)	244 (9.61)	272 (10.70)	339 (13.34)
	Height	H3	-	-	-	-	-	-	-	-	-	-	-	-	-	-	456 (17.95)	536 (21.10)	595 (23.43)	655 (25.79)	760 (29.92)
Remote Sensor	Maximum Height	Hr	281 (11.06)	281 (11.06)	281 (11.06)	281 (11.06)	252 (9.92)	261 (10.28)	266 (10.47)	291 (11.46)	315 (12.40)	326 (12.83)	356 (14.02)	383 (15.08)	400 (15.74)	457 (18.01)	518 (20.40)	583 (22.94)	629 (24.76)	687 (27.03)	806 (31.74)
	Approx. Weight, Unit: kg (lb) (*2)		3.6 (7.9)	3.6 (7.9)	3.6 (7.9)	3.8 (8.4)	4.2 (9.3)	4.8 (10.6)	5.5 (12.1)	7.4 (16.3)	10.8 (23.8)	13.0 (28.7)	18.2 (40.1)	22.8 (50.3)	31 (68.4)	50 (110.4)	79 (174.4)	109 (240.6)	136 (300.2)	173 (381.9)	233 (514.4)
Integral Flowmeter	Maximum Height	Hi	326 (12.83)	326 (12.83)	326 (12.83)	326 (12.83)	297 (11.69)	306 (12.05)	311 (12.24)	336 (13.23)	360 (14.17)	371 (14.61)	401 (15.79)	428 (16.85)	445 (17.50)	502 (19.77)	563 (22.16)	627 (24.69)	674 (26.52)	731 (28.79)	-
	Approx. Weight, Unit: kg (lb)		6.1 (13.5)	6.1 (13.5)	6.1 (13.5)	6.4 (14.1)	6.7 (14.8)	7.3 (16.1)	8.0 (17.6)	9.9 (21.8)	13.7 (30.2)	15.5 (34.2)	20.7 (45.6)	25.4 (56.0)	34 (75.1)	52 (114.8)	82 (181.0)	111 (245.0)	138 (304.6)	175 (386.3)	-
Grounding rings thin type (GRL, GRH, GRV) (*1)			+2 (+0.08)	+2 (+0.08)	+2 (+0.08)	+2 (+0.08)	+2 (+0.08)	+2 (+0.08)	+2 (+0.08)	+2 (+0.08)	+2 (+0.08)	+2 (+0.08)	+2 (+0.08)	+2 (+0.08)	+2 (+0.08)	+2 (+0.08)	+4 (+0.16)	+4 (+0.16)	+4 (+0.16)	+4 (+0.16)	-
Grounding rings thick type (GRN, GRJ, GRW) (*1)			-	-	-	-	+6 (+0.24)	+6 (+0.24)	+6 (+0.24)	+6 (+0.24)	+6 (+0.24)	+6 (+0.24)	+6 (+0.24)	+6 (+0.24)	+6 (+0.24)	+6 (+0.24)	+6 (+0.24)	+6 (+0.24)	+6 (+0.24)	+6 (+0.24)	+8 (+0.31)
Grounding rings thick type (GRN, GRJ, GRW) with gaskets (GA, GC, GD) (*1)			+10 (+0.39)	+10 (+0.39)	+10 (+0.39)	+10 (+0.39)	+10 (+0.39)	+10 (+0.39)	+10 (+0.39)	+10 (+0.39)	+10 (+0.39)	+10 (+0.39)	+10 (+0.39)	+10 (+0.39)	+12 (+0.47)	+12 (+0.47)	-	-	-	-	-
Metal hat grounding rings (GSN, GDN) (*1)			-	-	-	-	-	-	-	-	-	+6 (+0.24)	+6 (+0.24)	+6 (+0.24)	+6 (+0.24)	+6 (+0.24)	+6 (+0.24)	+6 (+0.24)	+6 (+0.24)	+6 (+0.24)	-
Grounding rings electrode type (GRP, GRT) (*1)			+28 (+1.10)	+28 (+1.10)	+28 (+1.10)	+28 (+1.10)	+29 (+1.14)	+29 (+1.14)	+29 (+1.14)	+29 (+1.14)	+29 (+1.14)	+29 (+1.14)	+29 (+1.14)	+29 (+1.14)	+34 (+1.34)	+34 (+1.34)	-	-	-	-	-
Grounding rings electrode type (GRP, GRT) with gaskets (GA, GC, GD) (*1)			+32 (+1.26)	+32 (+1.26)	+32 (+1.26)	+32 (+1.26)	+33 (+1.30)	+33 (+1.30)	+33 (+1.30)	+33 (+1.30)	+33 (+1.30)	+33 (+1.30)	+33 (+1.30)	+33 (+1.30)	+40 (+1.57)	+40 (+1.57)	-	-	-	-	-

*1: Add the value above (which is the total of both ends) to the lay length "L" when selecting optional grounding rings with/without gaskets.

*2: When submersible use or optional code DHC is selected, waterproof glands with union joints and cables are attached. When the cable length is 30-meters, add 9.5 kg (20.9 lb) to the weight in the table.

*3: The limit deviation of the lay length "L" is as follows.
- Size 2.5 to 200 mm (0.1 to 8 in.): 0/-3 mm
- Size 250 to 400 mm (10 to 16 in.): 0/-5 mm

Additional weight for FM (USA) Flameproof (FF2, FJ2, FT2) and FM (Canada) Flameproof (CF2, CJ2, CT2)

Size	2.5	5	10	15	25	32	40	50	65	80	100	125	150	200	250	300	350	400
Lining Code	A	A	A	A	A	A	A	A	A	A	A	A	A	A	A	A	A	A
Flange Approx. Additional Weight, Unit: kg (lb)	-	-	-	-	0.1 (0.22)	0.2 (0.44)	0.2 (0.44)	0.3 (0.66)	0.4 (0.88)	0.4 (0.88)	0.7 (1.54)	0.7 (1.54)	3 (6.61)	4 (8.82)	8 (17.64)	10 (22.05)	18 (39.68)	25 (55.12)

All Rights Reserved. Copyright © 2017, Yokogawa Electric Corporation

○ Flange, ASME Class 300

Unit: mm (approx. in.)

Model	Process Connection Code		BA2															
			-	-	-	-	-	-	-	CA2								
			PA2					-	PA2		-	PA2		-	PA2			
	Size Code		002	005	010	015	025	032	040	050	065	080	100	125	150	200	250	300
	Size		2.5 (0.1)	5 (0.2)	10 (0.4)	15 (0.5)	25 (1)	32 (1.25)	40 (1.5)	50 (2)	65 (2.5)	80 (3)	100 (4)	125 (5)	150 (6)	200 (8)	250 (10)	300 (12)
	Lining Code		A	A	A	A	A	A	A	A	A	A	A	A	A	A	A	A
Remote Sensor Integral Flowmeter	Lay Length (*1) (*3)	L	148 (5.83)	148 (5.83)	148 (5.83)	198 (7.80)	198 (7.78)	198 (7.78)	198 (7.78)	198 (7.78)	198 (7.78)	198 (7.78)	248 (9.74)	248 (9.74)	298 (11.71)	348 (13.68)	446 (17.54)	496 (19.51)
	Flange Outer Diameter	øD	95 (3.74)	95 (3.74)	95 (3.74)	95 (3.74)	125 (4.92)	135 (5.31)	155 (6.10)	165 (6.50)	190 (7.48)	210 (8.27)	255 (10.04)	280 (11.02)	320 (12.60)	380 (14.96)	445 (17.52)	520 (20.47)
	Flange Thickness (incl. lining flare)	t	20.3 (0.80)	20.3 (0.80)	20.3 (0.80)	17.3 (0.68)	21.9 (0.86)	22.5 (0.89)	24.1 (0.95)	25.7 (1.01)	28.9 (1.14)	32.0 (1.26)	35.2 (1.39)	38.4 (1.51)	41.5 (1.63)	46.2 (1.82)	53.1 (2.09)	56.3 (2.22)
	Lining Inner Diameter	ød	2 (0.09)	5 (0.19)	8 (0.30)	13 (0.51)	24 (0.93)	29 (1.13)	37 (1.44)	49 (1.94)	61 (2.40)	73 (2.87)	97 (3.82)	121 (4.76)	145 (5.72)	194 (7.65)	243 (9.55)	292 (11.51)
	Bolt Circle Diameter	øC	66.7 (2.63)	66.7 (2.63)	66.7 (2.63)	66.7 (2.63)	88.9 (3.50)	98.4 (3.87)	114.3 (4.50)	127.0 (5.00)	149.2 (5.87)	168.3 (6.63)	200.0 (7.87)	235.0 (9.25)	269.9 (10.63)	330.2 (13.00)	387.4 (15.25)	450.8 (17.75)
	Bolt Hole Interval	θ°	45	45	45	45	45	45	45	22.5	22.5	22.5	22.5	22.5	15	15	11.25	11.25
	Bolt Hole Diameter	øh	15.9 (0.63)	15.9 (0.63)	15.9 (0.63)	15.9 (0.63)	19.1 (0.75)	19.1 (0.75)	22.2 (0.87)	19.1 (0.75)	22.2 (0.87)	22.2 (0.87)	22.2 (0.87)	22.2 (0.87)	22.3 (0.88)	25.4 (1.00)	28.6 (1.13)	31.8 (1.25)
	Number of Bolt Holes	N	4	4	4	4	4	4	4	8	8	8	8	8	12	12	16	16
	Height	H1	164 (6.46)	164 (6.46)	164 (6.46)	164 (6.46)	143 (5.63)	154 (6.06)	164 (6.46)	182 (7.17)	203 (7.99)	219 (8.62)	252 (9.92)	278 (10.94)	303 (11.91)	358 (14.08)	421 (16.57)	483 (19.01)
	Height	H2	104 (4.09)	104 (4.09)	104 (4.09)	104 (4.09)	80 (3.15)	86 (3.39)	86 (3.39)	99 (3.90)	108 (4.25)	114 (4.49)	124 (4.88)	138 (5.43)	143 (5.61)	168 (6.60)	198 (7.81)	223 (8.77)
	Height	H3	-	-	-	-	-	-	-	-	-	-	-	-	-	-	496 (19.53)	571 (22.48)
Remote Sensor	Maximum Height	Hr	281 (11.06)	281 (11.06)	281 (11.06)	281 (11.06)	260 (10.24)	271 (10.67)	281 (11.06)	299 (11.77)	320 (12.60)	336 (13.23)	369 (14.53)	395 (15.55)	420 (16.53)	475 (18.70)	538 (21.19)	600 (23.62)
	Approx. Weight, Unit: kg (lb) (*2)		3.9 (8.6)	3.9 (8.6)	3.9 (8.6)	4.0 (8.8)	5.2 (11.5)	6.2 (13.7)	8.0 (17.6)	9.3 (20.5)	13.2 (29.1)	17.2 (37.9)	26.7 (58.9)	35.5 (78.3)	47 (103.8)	71 (156.7)	112 (247.2)	152 (335.5)
Integral Flowmeter	Maximum Height	Hi	326 (12.83)	326 (12.83)	326 (12.83)	326 (12.83)	305 (12.01)	316 (12.44)	326 (12.83)	344 (13.54)	365 (14.37)	381 (15.00)	414 (16.30)	440 (17.32)	465 (18.29)	520 (20.46)	583 (22.95)	645 (25.38)
	Approx. Weight, Unit: kg (lb)		6.5 (14.3)	6.5 (14.3)	6.5 (14.3)	6.6 (14.6)	7.8 (17.2)	8.8 (19.4)	10.5 (23.2)	11.8 (26.0)	15.7 (34.6)	19.7 (43.4)	29.2 (64.4)	38.0 (83.8)	50 (110.4)	74 (163.4)	114 (251.7)	155 (342.2)
Grounding rings thin type (GRL, GRH, GRV) (*1)			+2 (+0.08)	+2 (+0.08)	+2 (+0.08)	+2 (+0.08)	+2 (+0.08)	+2 (+0.08)	+2 (+0.08)	+2 (+0.08)	+2 (+0.08)	+2 (+0.08)	+2 (+0.08)	+2 (+0.08)	+2 (+0.08)	+2 (+0.08)	+4 (+0.16)	+4 (+0.16)
Grounding rings thick type (GRN, GRJ, GRW) (*1)			-	-	-	-	+6 (+0.24)	+6 (+0.24)	+6 (+0.24)	+6 (+0.24)	+6 (+0.24)	+6 (+0.24)	+6 (+0.24)	+6 (+0.24)	+6 (+0.24)	+6 (+0.24)	+6 (+0.24)	+6 (+0.24)
Grounding rings thick type (GRN, GRJ, GRW) with gaskets (GA, GC, GD) (*1)			+10 (+0.39)	+10 (+0.39)	+10 (+0.39)	+10 (+0.39)	+10 (+0.39)	+10 (+0.39)	+10 (+0.39)	+10 (+0.39)	+10 (+0.39)	+10 (+0.39)	+10 (+0.39)	+10 (+0.39)	+12 (+0.47)	+12 (+0.47)	-	-
Metal hat grounding rings (GSN, GDN) (*1)			-	-	-	-	-	-	-	-	-	+6 (+0.24)	+6 (+0.24)	+6 (+0.24)	+6 (+0.24)	+6 (+0.24)	+6 (+0.24)	+6 (+0.24)
Grounding rings electrode type (GRP, GRT) (*1)			+28 (+1.10)	+28 (+1.10)	+28 (+1.10)	+28 (+1.10)	+29 (+1.14)	+29 (+1.14)	+29 (+1.14)	+29 (+1.14)	+29 (+1.14)	+29 (+1.14)	+29 (+1.14)	+29 (+1.14)	+34 (+1.34)	+34 (+1.34)	-	-
Grounding rings electrode type (GRP, GRT) with gaskets (GA, GC, GD) (*1)			+32 (+1.26)	+32 (+1.26)	+32 (+1.26)	+32 (+1.26)	+33 (+1.30)	+33 (+1.30)	+33 (+1.30)	+33 (+1.30)	+33 (+1.30)	+33 (+1.30)	+33 (+1.30)	+33 (+1.30)	+40 (+1.57)	+40 (+1.57)	-	-

*1: Add the value above (which is the total of both ends) to the lay length "L" when selecting optional grounding rings with/without gaskets.

*2: When submersible use or optional code DHC is selected, waterproof glands with union joints and cables are attached. When the cable length is 30-meters, add 9.5 kg (20.9 lb) to the weight in the table.

*3: The limit deviation of the lay length "L" is as follows.
- Size 2.5 to 200 mm (0.1 to 8 in.): 0/-3 mm
- Size 250 to 400 mm (10 to 16 in.): 0/-5 mm

Additional weight for FM (USA) Flameproof (FF2, FJ2, FT2) and FM (Canada) Flameproof (CF2, CJ2, CT2)

Size	2.5	5	10	15	25	32	40	50	65	80	100	125	150	200	250	300
Lining Code	A	A	A	A	A	A	A	A	A	A	A	A	A	A	A	A
Flange Approx. Additional Weight, Unit: kg (lb)	-	-	-	-	0.1 (0.22)	0.2 (0.44)	0.2 (0.44)	0.3 (0.66)	0.4 (0.88)	0.4 (0.88)	0.7 (1.54)	0.7 (1.54)	3 (6.61)	4 (8.82)	8 (17.64)	10 (22.05)

All Rights Reserved. Copyright © 2017, Yokogawa Electric Corporation

○ Flange, EN PN16, EN PN40

Unit: mm (approx. in.)

Model	Process Connection Code		DE4			BE4								BE2								
			-	-	-	-	-	-	-	-	-	-	CE4	CE2								
			-	-	-	PE4					-	PE4		-	PE2		-	PE2				-
	Size Code		002	005	010	002	005	010	015	025	032	040	050	065	080	100	125	150	200	250	300	500
	Size		2.5 (0.1)	5 (0.2)	10 (0.4)	2.5 (0.1)	5 (0.2)	10 (0.4)	15 (0.5)	25 (1)	32 (1.25)	40 (1.5)	50 (2)	65 (2.5)	80 (3)	100 (4)	125 (5)	150 (6)	200 (8)	250 (10)	300 (12)	500 (20)
	Lining Code		A	A	A	A	A	A	A	A	A	A	A	A	A	A	A	A	A	A	A	A
Remote Sensor Integral Flowmeter	Lay Length (*1) (*3)	L	148 (5.83)	148 (5.83)	148 (5.83)	148 (5.83)	148 (5.83)	148 (5.83)	198 (7.80)	198 (7.78)	198 (7.78)	198 (7.78)	198 (7.78)	198 (7.78)	198 (7.78)	248 (9.74)	248 (9.74)	298 (11.71)	348 (13.68)	446 (17.54)	496 (19.51)	600 (23.62)
	Flange Outer Diameter	øD	90 (3.54)	90 (3.54)	90 (3.54)	95 (3.74)	95 (3.74)	95 (3.74)	95 (3.74)	115 (4.53)	140 (5.51)	150 (5.91)	165 (6.50)	185 (7.28)	200 (7.87)	220 (8.66)	250 (9.84)	285 (11.22)	340 (13.39)	405 (15.94)	460 (18.11)	715 (28.15)
	Flange Thickness (incl. lining flare)	t	20.0 (0.79)	20.0 (0.79)	20.0 (0.79)	20.0 (0.79)	20.0 (0.79)	20.0 (0.79)	19.0 (0.75)	22.0 (0.87)	21.0 (0.83)	21.0 (0.83)	23.0 (0.91)	21.0 (0.83)	23.0 (0.91)	23.0 (0.91)	25.0 (0.98)	25.5 (1.00)	27.5 (1.08)	30.0 (1.18)	31.0 (1.22)	49.3 (1.94)
	Lining Inner Diameter	ød	2 (0.09)	5 (0.19)	8 (0.30)	2 (0.09)	5 (0.19)	8 (0.30)	13 (0.51)	24 (0.93)	29 (1.13)	37 (1.44)	49 (1.94)	61 (2.40)	73 (2.87)	97 (3.82)	121 (4.76)	145 (5.72)	194 (7.65)	243 (9.55)	292 (11.51)	459 (18.07)
	Bolt Circle Diameter	øC	60 (2.36)	60 (2.36)	60 (2.36)	65 (2.56)	65 (2.56)	65 (2.56)	65 (2.56)	85 (3.35)	100 (3.94)	110 (4.33)	125 (4.92)	145 (5.71)	160 (6.30)	180 (7.09)	210 (8.27)	240 (9.45)	295 (11.61)	355 (13.98)	410 (16.14)	650 (25.59)
	Bolt Hole Interval	θ°	45	45	45	45	45	45	45	45	45	45	45	22.5	22.5	22.5	22.5	22.5	15	15	15	9
	Bolt Hole Diameter	øh	14 (0.55)	14 (0.55)	14 (0.55)	14 (0.55)	14 (0.55)	14 (0.55)	14 (0.55)	14 (0.55)	18 (0.71)	18 (0.71)	18 (0.71)	18 (0.71)	18 (0.71)	18 (0.71)	18 (0.71)	22 (0.87)	22 (0.87)	26 (1.02)	26 (1.02)	33 (1.30)
	Number of Bolt Holes	N	4	4	4	4	4	4	4	4	4	4	4	8	8	8	8	8	12	12	12	20
	Height	H1	164 (6.46)	164 (6.46)	164 (6.46)	164 (6.46)	164 (6.46)	164 (6.46)	164 (6.46)	138 (5.43)	156 (6.14)	161 (6.34)	182 (7.17)	201 (7.91)	214 (8.43)	234 (9.21)	263 (10.35)	285 (11.22)	338 (13.29)	401 (15.78)	453 (17.82)	696 (27.42)
	Height	H2	104 (4.09)	104 (4.09)	104 (4.09)	104 (4.09)	104 (4.09)	104 (4.09)	104 (4.09)	80 (3.15)	86 (3.39)	86 (3.39)	99 (3.90)	108 (4.25)	114 (4.49)	124 (4.88)	138 (5.43)	143 (5.61)	168 (6.60)	198 (7.81)	223 (8.77)	339 (13.34)
	Height	H3	-	-	-	-	-	-	-	-	-	-	-	-	-	-	-	-	-	456 (17.95)	511 (20.12)	786 (30.94)
Remote Sensor	Maximum Height	Hr	281 (11.06)	281 (11.06)	281 (11.06)	281 (11.06)	281 (11.06)	281 (11.06)	281 (11.06)	255 (10.04)	273 (10.75)	278 (10.94)	299 (11.77)	318 (12.52)	331 (13.03)	351 (13.82)	380 (14.96)	402 (15.84)	455 (17.91)	518 (20.40)	570 (22.44)	814 (32.04)
	Approx. Weight, Unit: kg (lb) (*2)		3.9 (8.6)	3.9 (8.6)	3.9 (8.6)	4.1 (9.0)	4.1 (9.0)	4.1 (9.0)	4.2 (9.3)	4.8 (10.6)	6.4 (14.1)	7.1 (15.7)	8.9 (19.6)	9.9 (21.8)	12.4 (27.3)	15.0 (33.1)	20.7 (45.6)	29 (64.0)	44 (97.1)	73 (161.2)	91 (200.9)	247 (545.3)
Integral Flowmeter	Maximum Height	Hi	326 (12.83)	326 (12.83)	326 (12.83)	326 (12.83)	326 (12.83)	326 (12.83)	326 (12.83)	300 (11.81)	318 (12.52)	323 (12.72)	344 (13.54)	363 (14.29)	376 (14.80)	396 (15.59)	425 (16.73)	447 (17.60)	500 (19.67)	563 (22.16)	615 (24.20)	-
	Approx. Weight, Unit: kg (lb)		6.5 (14.3)	6.5 (14.3)	6.5 (14.3)	6.7 (14.8)	6.7 (14.8)	6.7 (14.8)	6.8 (15.0)	7.4 (16.3)	9.0 (19.8)	9.6 (21.2)	11.4 (25.1)	12.4 (27.3)	15.0 (33.1)	17.6 (38.8)	23.3 (51.4)	31 (68.4)	46 (101.6)	75 (165.6)	93 (205.3)	-
Grounding rings thin type (GRL, GRH, GRV) (*1)			+2 (+0.08)	+2 (+0.08)	+2 (+0.08)	+2 (+0.08)	+2 (+0.08)	+2 (+0.08)	+2 (+0.08)	+2 (+0.08)	+2 (+0.08)	+2 (+0.08)	+2 (+0.08)	+2 (+0.08)	+2 (+0.08)	+2 (+0.08)	+2 (+0.08)	+2 (+0.08)	+2 (+0.08)	+4 (+0.16)	+4 (+0.16)	-
Grounding rings thick type (GRN, GRJ, GRW) (*1)			-	-	-	-	-	-	-	+6 (+0.24)	+6 (+0.24)	+6 (+0.24)	+6 (+0.24)	+6 (+0.24)	+6 (+0.24)	+6 (+0.24)	+6 (+0.24)	+6 (+0.24)	+6 (+0.24)	+6 (+0.24)	+6 (+0.24)	+8 (+0.31)
Grounding rings thick type (GRN, GRJ, GRW) with gaskets (GA, GC, GD) (*1)			+10 (+0.39)	+10 (+0.39)	+10 (+0.39)	+10 (+0.39)	+10 (+0.39)	+10 (+0.39)	+10 (+0.39)	+10 (+0.39)	+10 (+0.39)	+10 (+0.39)	+10 (+0.39)	+10 (+0.39)	+10 (+0.39)	+10 (+0.39)	+10 (+0.39)	+12 (+0.47)	+12 (+0.47)	-	-	-
Metal hat grounding rings (GSN, GDN) (*1)			-	-	-	-	-	-	-	-	-	-	-	-	+6 (+0.24)	+6 (+0.24)	+6 (+0.24)	+6 (+0.24)	+6 (+0.24)	+6 (+0.24)	+6 (+0.24)	-
Grounding rings electrode type (GRP, GRT) (*1)			+28 (+1.10)	+28 (+1.10)	+28 (+1.10)	+28 (+1.10)	+28 (+1.10)	+28 (+1.10)	+28 (+1.10)	+29 (+1.14)	+29 (+1.14)	+29 (+1.14)	+29 (+1.14)	+29 (+1.14)	+29 (+1.14)	+29 (+1.14)	+29 (+1.14)	+34 (+1.34)	+34 (+1.34)	-	-	-
Grounding rings electrode type (GRP, GRT) with gaskets (GA, GC, GD) (*1)			+32 (+1.26)	+32 (+1.26)	+32 (+1.26)	+32 (+1.26)	+32 (+1.26)	+32 (+1.26)	+32 (+1.26)	+33 (+1.30)	+33 (+1.30)	+33 (+1.30)	+33 (+1.30)	+33 (+1.30)	+33 (+1.30)	+33 (+1.30)	+33 (+1.30)	+40 (+1.57)	+40 (+1.57)	-	-	-

*1: Add the value above (which is the total of both ends) to the lay length "L" when selecting optional grounding rings with/without gaskets.

*2: When submersible use or optional code DHC is selected, waterproof glands with union joints and cables are attached. When the cable length is 30-meters, add 9.5 kg (20.9 lb) to the weight in the table.

*3: The limit deviation of the lay length "L" is as follows.
- Size 2.5 to 200 mm (0.1 to 8 in.): 0/-3 mm
- Size 250 to 400 mm (10 to 16 in.): 0/-5 mm

Additional weight for FM (USA) Flameproof (FF2, FJ2, FT2)

Size	2.5	5	10	15	25	32	40	50	65	80	100	125	150	200	250	300
Lining Code	A	A	A	A	A	A	A	A	A	A	A	A	A	A	A	A
Flange Approx. Additional Weight, Unit: kg (lb)	-	-	-	-	0.1 (0.22)	0.2 (0.44)	0.2 (0.44)	0.3 (0.66)	0.4 (0.88)	0.4 (0.88)	0.7 (1.54)	0.7 (1.54)	3 (6.61)	4 (8.82)	8 (17.64)	10 (22.05)

All Rights Reserved. Copyright © 2017, Yokogawa Electric Corporation

○ Flange, EN PN10, EN PN25

Unit: mm (approx. in.)

Model	Process Connection Code		BE3, PE3									BE1, CE1 PE1					-
	Size Code		080	100	125	150	200	250	300	350	400	200	250	300	350	400	500
	Size		80 (3)	100 (4)	125 (5)	150 (6)	200 (8)	250 (10)	300 (12)	350 (14)	400 (16)	200 (8)	250 (10)	300 (12)	350 (14)	400 (16)	500 (20)
	Lining Code		A	A	A	A	A	A	A	A	A	A	A	A	A	A	A
Remote Sensor Integral Flowmeter	Lay Length (*1) (*3)	L	198 (7.78)	248 (9.74)	248 (9.74)	298 (11.71)	348 (13.68)	446 (17.54)	496 (19.51)	546 (21.48)	596 (23.44)	348 (13.68)	446 (17.54)	496 (19.51)	546 (21.48)	596 (23.44)	600 (23.62)
	Flange Outer Diameter	øD	200 (7.87)	235 (9.25)	270 (10.63)	300 (11.81)	360 (14.17)	425 (16.73)	485 (19.09)	555 (21.85)	620 (24.41)	340 (13.39)	395 (15.55)	445 (17.52)	505 (19.88)	565 (22.24)	670 (26.38)
	Flange Thickness (incl. lining flare)	t	27.0 (1.06)	27.0 (1.06)	29.0 (1.14)	31.5 (1.24)	33.5 (1.32)	36.0 (1.42)	38.0 (1.50)	41.5 (1.63)	43.5 (1.71)	27.5 (1.08)	30.0 (1.18)	29.0 (1.14)	29.5 (1.16)	29.5 (1.16)	33.3 (1.31)
	Lining Inner Diameter	ød	73 (2.87)	97 (3.82)	121 (4.76)	145 (5.72)	194 (7.65)	243 (9.55)	292 (11.51)	323 (12.73)	374 (14.70)	194 (7.65)	243 (9.55)	292 (11.51)	323 (12.73)	374 (14.70)	459 (18.07)
	Bolt Circle Diameter	øC	160 (6.30)	190 (7.48)	220 (8.66)	250 (9.84)	310 (12.20)	370 (14.57)	430 (16.93)	490 (19.29)	550 (21.65)	295 (11.61)	350 (13.78)	400 (15.75)	460 (18.11)	515 (20.28)	620 (24.41)
	Bolt Hole Interval	θ°	22.5	22.5	22.5	22.5	15	15	11.25	11.25	11.25	22.5	15	15	11.25	11.25	9
	Bolt Hole Diameter	øh	18 (0.71)	22 (0.87)	26 (1.02)	26 (1.02)	26 (1.02)	30 (1.18)	30 (1.18)	33 (1.30)	36 (1.42)	22 (0.87)	22 (0.87)	22 (0.87)	22 (0.87)	26 (1.02)	26 (1.02)
	Number of Bolt Holes	N	8	8	8	8	12	12	16	16	16	8	12	12	16	16	20
	Height	H1	214 (8.43)	242 (9.53)	273 (10.75)	293 (11.52)	348 (13.69)	411 (16.18)	465 (18.32)	522 (20.53)	582 (22.91)	338 (13.29)	396 (15.58)	445 (17.53)	497 (19.55)	554 (21.82)	674 (26.53)
	Height	H2	114 (4.49)	124 (4.88)	138 (5.43)	143 (5.61)	168 (6.60)	198 (7.81)	223 (8.77)	244 (9.61)	272 (10.70)	168 (6.60)	198 (7.81)	223 (8.77)	244 (9.61)	272 (10.70)	339 (13.34)
	Height	H3	-	-	-	-	-	476 (18.74)	536 (21.10)	615 (24.21)	680 (26.77)	-	446 (17.56)	496 (19.53)	565 (22.24)	625 (24.61)	730 (28.74)
Remote Sensor	Maximum Height	Hr	331 (13.03)	359 (14.13)	390 (15.35)	410 (16.13)	465 (18.30)	528 (20.79)	583 (22.94)	639 (25.15)	699 (27.52)	455 (17.91)	513 (20.20)	563 (22.15)	614 (24.17)	672 (26.44)	791 (31.15)
	Approx. Weight, Unit: kg (lb) (*2)		13.8 (30.42)	18.8 (41.45)	25.3 (55.78)	35 (77.26)	54 (119.21)	86 (189.85)	110 (242.83)	146 (322.30)	189 (417.22)	44 (97.1)	70 (154.5)	84 (185.4)	105 (231.8)	132 (291.4)	189 (417.2)
Integral Flowmeter	Maximum Height	Hi	376 (14.80)	404 (15.91)	435 (17.13)	455 (17.89)	510 (20.06)	573 (22.55)	627 (24.69)	684 (26.91)	744 (29.28)	500 (19.67)	558 (21.96)	607 (23.91)	659 (25.93)	716 (28.20)	-
	Approx. Weight, Unit: kg (lb)		16.4 (36.16)	21.4 (47.18)	27.9 (61.51)	38 (83.89)	56 (123.62)	89 (196.47)	112 (247.24)	148 (326.71)	191 (421.63)	47 (103.8)	72 (158.9)	87 (192.1)	108 (238.4)	135 (298.0)	-
Grounding rings thin type (GRL, GRH, GRV) (*1)			+2 (+0.08)	+2 (+0.08)	+2 (+0.08)	+2 (+0.08)	+2 (+0.08)	+4 (+0.16)	+4 (+0.16)	-	-	+2 (+0.08)	+4 (+0.16)	+4 (+0.16)	+4 (+0.16)	+4 (+0.16)	-
Grounding rings thick type (GRN, GRJ, GRW) (*1)			+6 (+0.24)	+6 (+0.24)	+6 (+0.24)	+6 (+0.24)	+6 (+0.24)	+6 (+0.24)	+6 (+0.24)	-	-	+6 (+0.24)	+6 (+0.24)	+6 (+0.24)	+6 (+0.24)	+6 (+0.24)	+8 (+0.31)
Grounding rings thick type (GRN, GRJ, GRW) with gaskets (GA, GC, GD) (*1)			+12 (+0.47)	+12 (+0.47)	+12 (+0.47)	+12 (+0.47)	+12 (+0.47)	-	-	-	-	+12 (+0.47)	-	-	-	-	-
Metal hat grounding rings (GSN, GDN) (*1)			+6 (+0.24)	+6 (+0.24)	+6 (+0.24)	+6 (+0.24)	+6 (+0.24)	+6 (+0.24)	+6 (+0.24)	+6 (+0.24)	+6 (+0.24)	+6 (+0.24)	+6 (+0.24)	+6 (+0.24)	+6 (+0.24)	+6 (+0.24)	-
Grounding rings electrode type (GRP, GRT) (*1)			+34 (+13.4)	+34 (+13.4)	+34 (+13.4)	+34 (+13.4)	+34 (+13.4)	-	-	-	-	+34 (+13.4)	-	-	-	-	-
Grounding rings electrode type (GRP, GRT) with gaskets (GA, GC, GD) (*1)			+40 (+1.57)	+40 (+1.57)	+40 (+1.57)	+40 (+1.57)	+40 (+1.57)	-	-	-	-	+40 (+1.57)	-	-	-	-	-

*1: Add the value above (which is the total of both ends) to the lay length "L" when selecting optional grounding rings with/without gaskets.

*2: When submersible use or optional code DHC is selected, waterproof glands with union joints and cables are attached. When the cable length is 30-meters, add 9.5 kg (20.9 lb) to the weight in the table.

*3: The limit deviation of the lay length "L" is as follows.
- Size 2.5 to 200 mm (0.1 to 8 in.): 0/-3 mm
- Size 250 to 400 mm (10 to 16 in.): 0/-5 mm

Additional weight for FM (USA) Flameproof (FF2, FJ2, FT2)

Size	80	100	125	150	200	250	300	350	400
Lining Code	A	A	A	A	A	A	A	A	A
Flange Approx. Additional Weight, Unit: kg (lb)	0.4 (0.88)	0.7 (1.54)	0.7 (1.54)	3 (6.61)	4 (8.82)	8 (17.64)	10 (22.05)	18 (39.68)	25 (55.12)

All Rights Reserved. Copyright © 2017, Yokogawa Electric Corporation

○ Flange, JIS F12

Unit: mm (approx. in.)

Model	Process Connection Code		BG1 / CG1								
	Size Code		080	100	125	150	200	250	300	350	400
	Size		80 (3)	100 (4)	125 (5)	150 (6)	200 (8)	250 (10)	300 (12)	350 (14)	400 (16)
	Lining Code		A	A	A	A	A	A	A	A	A
Remote Sensor Integral Flowmeter	Lay Length (*1) (*3)	L	198 (7.78)	248 (9.74)	248 (9.74)	298 (11.71)	348 (13.68)	446 (17.54)	496 (19.51)	546 (21.48)	596 (23.44)
	Flange Outer Diameter	øD	211 (8.31)	238 (9.37)	263 (10.35)	290 (11.42)	342 (13.46)	410 (16.14)	464 (18.27)	530 (20.87)	582 (22.91)
	Flange Thickness (incl. lining flare)	t	23.0 (0.91)	23.0 (0.91)	25.0 (0.98)	26.5 (1.04)	26.5 (1.04)	29.0 (1.14)	28.0 (1.10)	30.5 (1.20)	30.5 (1.20)
	Lining Inner Diameter	ød	73 (2.87)	97 (3.82)	121 (4.76)	145 (5.72)	194 (7.65)	243 (9.55)	292 (11.51)	323 (12.73)	374 (14.70)
	Bolt Circle Diameter	øC	168 (6.61)	195 (7.68)	220 (8.66)	247 (9.72)	299 (11.77)	360 (14.17)	414 (16.30)	472 (18.58)	524 (20.63)
	Bolt Hole Interval	θ°	45	45	30	30	22.5	22.5	18	18	15
	Bolt Hole Diameter	øh	19 (0.75)	19 (0.75)	19 (0.75)	19 (0.75)	19 (0.75)	23 (0.91)	23 (0.91)	25 (0.98)	25 (0.98)
	Number of Bolt Holes	N	4	4	6	6	8	8	10	10	12
	Height	H1	220 (8.66)	243 (9.57)	270 (10.63)	288 (11.32)	339 (13.33)	403 (15.88)	455 (17.90)	509 (20.04)	563 (22.16)
	Height	H2	114 (4.49)	124 (4.88)	138 (5.43)	143 (5.61)	168 (6.60)	198 (7.81)	223 (8.77)	244 (9.61)	272 (10.70)
	Height	H3	-	-	-	-	-	461 (18.15)	515 (20.28)	591 (23.27)	643 (25.31)
Remote Sensor	Maximum Height	Hr	337 (13.27)	360 (14.17)	387 (15.24)	405 (15.94)	456 (17.95)	521 (20.50)	572 (22.52)	626 (24.66)	680 (26.78)
	Approx. Weight, Unit: kg (lb) (*2)		12.8 (28.2)	16.1 (35.5)	21.2 (46.7)	30 (66.2)	43 (94.9)	73 (161.2)	88 (194.3)	114 (251.7)	140 (309.1)
Integral Flowmeter	Maximum Height	Hi	382 (15.04)	405 (15.94)	432 (17.01)	450 (17.70)	501 (19.71)	565 (22.26)	617 (24.28)	671 (26.42)	725 (28.54)
	Approx. Weight, Unit: kg (lb)		15.3 (33.7)	18.7 (41.2)	23.6 (52.0)	33 (72.9)	46 (101.6)	75 (165.6)	90 (198.7)	116 (256.1)	142 (313.5)
Grounding rings thin type (GRL, GRH, GRV) (*1)			+2 (+0.08)	+2 (+0.08)	+2 (+0.08)	+2 (+0.08)	+2 (+0.08)	+4 (+0.16)	+4 (+0.16)	+4 (+0.16)	+4 (+0.16)
Grounding rings thick type (GRN, GRJ, GRW) (*1)			+6 (+0.24)	+6 (+0.24)	+6 (+0.24)	+6 (+0.24)	+6 (+0.24)	+6 (+0.24)	+6 (+0.24)	+6 (+0.24)	+6 (+0.24)
Grounding rings thick type (GRN, GRJ, GRW) with gaskets (GA, GC, GD) (*1)			+10 (+0.39)	+10 (+0.39)	+10 (+0.39)	+12 (+0.47)	+12 (+0.47)	-	-	-	-
Metal hat grounding rings (GSN, GDN) (*1)			+6 (+0.24)	+6 (+0.24)	+6 (+0.24)	+6 (+0.24)	+6 (+0.24)	+6 (+0.24)	+6 (+0.24)	+6 (+0.24)	+6 (+0.24)
Grounding rings electrode type (GRP, GRT) (*1)			+29 (+1.14)	+29 (+1.14)	+29 (+1.14)	+34 (+1.34)	+34 (+1.34)	-	-	-	-
Grounding rings electrode type (GRP, GRT) with gaskets (GA, GC, GD) (*1)			+33 (+1.30)	+33 (+1.30)	+33 (+1.30)	+40 (+1.57)	+40 (+1.57)	-	-	-	-

*1: Add the value above (which is the total of both ends) to the lay length "L" when selecting optional grounding rings with/without gaskets.

*2: When submersible use or optional code DHC is selected, waterproof glands with union joints and cables are attached. When the cable length is 30-meters, add 9.5 kg (20.9 lb) to the weight in the table.

*3: The limit deviation of the lay length "L" is as follows.
- Size 2.5 to 200 mm (0.1 to 8 in.): 0/-3 mm
- Size 250 to 400 mm (10 to 16 in.): 0/-5 mm

Additional weight for FM (USA) Flameproof (FF2, FJ2, FT2)

Size	80	100	125	150	200	250	300	350	400
Lining Code	A	A	A	A	A	A	A	A	A
Flange Approx. Additional Weight, Unit: kg (lb)	0.4 (0.88)	0.7 (1.54)	0.7 (1.54)	3 (6.61)	4 (8.82)	8 (17.64)	10 (22.05)	18 (39.68)	25 (55.12)

All Rights Reserved. Copyright © 2017, Yokogawa Electric Corporation

○ Flange, JIS 10K

Unit: mm (approx. in.)

Model	Process Connection Code		DJ1			BJ1																
			-	-	-	-	-	-	-	-	-	-	CJ1									
			-	-	-	PJ1				-	PJ1		-	PJ1		-	PJ1					
	Size Code		002	005	010	002	005	010	015	025	032	040	050	065	080	100	125	150	200	250	300	350	400
	Size		2.5 (0.1)	5 (0.2)	10 (0.4)	2.5 (0.1)	5 (0.2)	10 (0.4)	15 (0.5)	25 (1)	32 (1.25)	40 (1.5)	50 (2)	65 (2.5)	80 (3)	100 (4)	125 (5)	150 (6)	200 (8)	250 (10)	300 (12)	350 (14)	400 (16)
	Lining Code		A	A	A	A	A	A	A	A	A	A	A	A	A	A	A	A	A	A	A	A	A
Remote Sensor Integral Flowmeter	Lay Length (*1) (*3)	L	148 (5.83)	148 (5.83)	148 (5.83)	148 (5.83)	148 (5.83)	148 (5.83)	198 (7.80)	198 (7.78)	198 (7.78)	198 (7.78)	198 (7.78)	198 (7.78)	198 (7.78)	248 (9.74)	248 (9.74)	298 (11.71)	348 (13.68)	446 (17.54)	496 (19.51)	546 (21.48)	596 (23.44)
	Flange Outer Diameter	øD	90 (3.54)	90 (3.54)	90 (3.54)	95 (3.74)	95 (3.74)	95 (3.74)	95 (3.74)	125 (4.92)	135 (5.31)	140 (5.51)	155 (6.10)	175 (6.89)	185 (7.28)	210 (8.27)	250 (9.84)	280 (11.02)	330 (12.99)	400 (15.75)	445 (17.52)	490 (19.29)	560 (22.05)
	Flange Thickness (incl. lining flare)	t	18.0 (0.71)	18.0 (0.71)	18.0 (0.71)	18.0 (0.71)	18.0 (0.71)	18.0 (0.71)	15.0 (0.59)	20.0 (0.79)	21.0 (0.83)	21.0 (0.83)	21.0 (0.83)	23.0 (0.91)	23.0 (0.91)	23.0 (0.91)	25.0 (0.98)	26.5 (1.04)	26.5 (1.04)	29.0 (1.14)	28.0 (1.10)	30.5 (1.20)	32.5 (1.28)
	Lining Inner Diameter	ød	2 (0.09)	5 (0.19)	8 (0.30)	2 (0.09)	5 (0.19)	8 (0.30)	13 (0.51)	24 (0.93)	29 (1.13)	37 (1.44)	49 (1.94)	61 (2.40)	73 (2.87)	97 (3.82)	121 (4.76)	145 (5.72)	194 (7.65)	243 (9.55)	292 (11.51)	323 (12.73)	374 (14.70)
	Bolt Circle Diameter	øC	65 (2.56)	65 (2.56)	65 (2.56)	70 (2.76)	70 (2.76)	70 (2.76)	70 (2.76)	90 (3.54)	100 (3.94)	105 (4.13)	120 (4.72)	140 (5.51)	150 (5.91)	175 (6.89)	210 (8.27)	240 (9.45)	290 (11.42)	355 (13.98)	400 (15.75)	445 (17.52)	510 (20.08)
	Bolt Hole Interval	θ°	45	45	45	45	45	45	45	45	45	45	45	45	22.5	22.5	22.5	22.5	15	15	11.25	11.25	11.25
	Bolt Hole Diameter	øh	15 (0.59)	15 (0.59)	15 (0.59)	15 (0.59)	15 (0.59)	15 (0.59)	15 (0.59)	19 (0.75)	19 (0.75)	19 (0.75)	19 (0.75)	19 (0.75)	19 (0.75)	19 (0.75)	23 (0.91)	23 (0.91)	23 (0.91)	25 (0.98)	25 (0.98)	25 (0.98)	27 (1.06)
	Number of Bolt Holes	N	4	4	4	4	4	4	4	4	4	4	4	4	8	8	8	8	12	12	16	16	16
	Height	H1	164 (6.46)	164 (6.46)	164 (6.46)	164 (6.46)	164 (6.46)	164 (6.46)	164 (6.46)	143 (5.63)	154 (6.06)	156 (6.14)	177 (6.97)	196 (7.72)	207 (8.15)	229 (9.02)	263 (10.35)	283 (11.12)	333 (13.10)	398 (15.68)	445 (17.53)	489 (19.25)	552 (21.72)
	Height	H2	104 (4.09)	104 (4.09)	104 (4.09)	104 (4.09)	104 (4.09)	104 (4.09)	104 (4.09)	80 (3.15)	86 (3.39)	86 (3.39)	99 (3.90)	108 (4.25)	114 (4.49)	124 (4.88)	138 (5.43)	143 (5.61)	168 (6.60)	198 (7.81)	223 (8.77)	244 (9.61)	272 (10.70)
	Height	H3	-	-	-	-	-	-	-	-	-	-	-	-	-	-	-	-	-	451 (17.76)	496 (19.53)	550 (21.65)	620 (24.41)
Remote Sensor	Maximum Height	Hr	281 (11.06)	281 (11.06)	281 (11.06)	281 (11.06)	281 (11.06)	281 (11.06)	281 (11.06)	260 (10.24)	271 (10.67)	273 (10.75)	294 (11.57)	313 (12.32)	324 (12.76)	346 (13.62)	380 (14.96)	400 (15.74)	450 (17.71)	516 (20.30)	563 (22.15)	606 (23.87)	669 (26.34)
	Approx. Weight, Unit: kg (lb) (*2)		3.6 (7.9)	3.6 (7.9)	3.6 (7.9)	3.7 (8.2)	3.7 (8.2)	3.7 (8.2)	3.8 (8.4)	4.8 (10.6)	5.9 (13.0)	6.1 (13.5)	7.3 (16.1)	9.6 (21.2)	10.2 (22.5)	13.0 (28.7)	19.1 (42.1)	27 (59.6)	39 (86.1)	67 (147.9)	78 (172.2)	95 (209.7)	126 (278.2)
Integral Flowmeter	Maximum Height	Hi	326 (12.83)	326 (12.83)	326 (12.83)	326 (12.83)	326 (12.83)	326 (12.83)	326 (12.83)	305 (12.01)	316 (12.44)	318 (12.52)	339 (13.35)	358 (14.09)	369 (14.53)	391 (15.39)	425 (16.73)	445 (17.50)	495 (19.47)	560 (22.06)	607 (23.91)	651 (25.63)	714 (28.10)
	Approx. Weight, Unit: kg (lb)		6.2 (13.7)	6.2 (13.7)	6.2 (13.7)	6.3 (13.9)	6.3 (13.9)	6.3 (13.9)	6.4 (14.1)	7.3 (16.1)	8.4 (18.5)	8.7 (19.2)	9.8 (21.6)	12.1 (26.7)	12.7 (28.0)	15.6 (34.4)	21.6 (47.6)	30 (66.2)	41 (90.5)	69 (152.3)	80 (176.6)	97 (214.1)	129 (284.8)
Grounding rings thin type (GRL, GRH, GRV) (*1)			+2 (+0.08)	+2 (+0.08)	+2 (+0.08)	+2 (+0.08)	+2 (+0.08)	+2 (+0.08)	+2 (+0.08)	+2 (+0.08)	+2 (+0.08)	+2 (+0.08)	+2 (+0.08)	+2 (+0.08)	+2 (+0.08)	+2 (+0.08)	+2 (+0.08)	+2 (+0.08)	+2 (+0.08)	+4 (+0.16)	+4 (+0.16)	+4 (+0.16)	+4 (+0.16)
Grounding rings thick type (GRN, GRJ, GRW) (*1)			-	-	-	-	-	-	-	+6 (+0.24)	+6 (+0.24)	+6 (+0.24)	+6 (+0.24)	+6 (+0.24)	+6 (+0.24)	+6 (+0.24)	+6 (+0.24)	+6 (+0.24)	+6 (+0.24)	+6 (+0.24)	+6 (+0.24)	+6 (+0.24)	+6 (+0.24)
Grounding rings thick type (GRN, GRJ, GRW) with gaskets (GA, GC, GD) (*1)			+10 (+0.39)	+10 (+0.39)	+10 (+0.39)	+10 (+0.39)	+10 (+0.39)	+10 (+0.39)	+10 (+0.39)	+10 (+0.39)	+10 (+0.39)	+10 (+0.39)	+10 (+0.39)	+10 (+0.39)	+10 (+0.39)	+10 (+0.39)	+10 (+0.39)	+12 (+0.47)	+12 (+0.47)	-	-	-	-
Metal hat grounding rings (GSN, GDN) (*1)			-	-	-	-	-	-	-	-	-	-	-	-	+6 (+0.24)	+6 (+0.24)	+6 (+0.24)	+6 (+0.24)	+6 (+0.24)	+6 (+0.24)	+6 (+0.24)	+6 (+0.24)	+6 (+0.24)
Grounding rings electrode type (GRP, GRT) (*1)			+28 (+1.10)	+28 (+1.10)	+28 (+1.10)	+28 (+1.10)	+28 (+1.10)	+28 (+1.10)	+28 (+1.10)	+29 (+1.14)	+29 (+1.14)	+29 (+1.14)	+29 (+1.14)	+29 (+1.14)	+29 (+1.14)	+29 (+1.14)	+29 (+1.14)	+34 (+1.34)	+34 (+1.34)	-	-	-	-
Grounding rings electrode type (GRP, GRT) with gaskets (GA, GC, GD) (*1)			+32 (+1.26)	+32 (+1.26)	+32 (+1.26)	+32 (+1.26)	+32 (+1.26)	+32 (+1.26)	+32 (+1.26)	+33 (+1.30)	+33 (+1.30)	+33 (+1.30)	+33 (+1.30)	+33 (+1.30)	+33 (+1.30)	+33 (+1.30)	+33 (+1.30)	+40 (+1.57)	+40 (+1.57)	-	-	-	-

*1: Add the value above (which is the total of both ends) to the lay length "L" when selecting optional grounding rings with/without gaskets.

*2: When submersible use or optional code DHC is selected, waterproof glands with union joints and cables are attached. When the cable length is 30-meters, add 9.5 kg (20.9 lb) to the weight in the table.

*3: The limit deviation of the lay length "L" is as follows.
- Size 2.5 to 200 mm (0.1 to 8 in.): 0/-3 mm
- Size 250 to 400 mm (10 to 16 in.): 0/-5 mm

Additional weight for FM (USA) Flameproof (FF2, FJ2, FT2)

Size	2.5	5	10	15	25	32	40	50	65	80	100	125	150	200	250	300	350	400
Lining Code	A	A	A	A	A	A	A	A	A	A	A	A	A	A	A	A	A	A
Flange Approx. Additional Weight, Unit: kg (lb)	-	-	-	-	0.1 (0.22)	0.2 (0.44)	0.2 (0.44)	0.3 (0.66)	0.4 (0.88)	0.4 (0.88)	0.7 (1.54)	0.7 (1.54)	3 (6.61)	4 (8.82)	8 (17.64)	10 (22.05)	18 (39.68)	25 (55.12)

All Rights Reserved. Copyright © 2017, Yokogawa Electric Corporation

○ Flange, JIS 20K

Unit: mm (approx. in.)

Model	Process Connection Code		DJ2			BJ2															
			-	-	-	-	-	-	-	-	-	-	CJ2								
	Size Code		002	005	010	002	005	010	015	025	032	040	050	065	080	100	125	150	200	250	300
	Size		2.5 (0.1)	5 (0.2)	10 (0.4)	2.5 (0.1)	5 (0.2)	10 (0.4)	15 (0.5)	25 (1)	32 (1.25)	40 (1.5)	50 (2)	65 (2.5)	80 (3)	100 (4)	125 (5)	150 (6)	200 (8)	250 (10)	300 (12)
	Lining Code		A	A	A	A	A	A	A	A	A	A	A	A	A	A	A	A	A	A	A
Remote Sensor Integral Flowmeter	Lay Length (*1) (*3)	L	148 (5.83)	148 (5.83)	148 (5.83)	148 (5.83)	148 (5.83)	148 (5.83)	198 (7.80)	198 (7.78)	198 (7.78)	198 (7.78)	198 (7.78)	198 (7.78)	198 (7.78)	248 (9.74)	248 (9.74)	298 (11.71)	348 (13.68)	446 (17.54)	496 (19.51)
	Flange Outer Diameter	øD	90 (3.54)	90 (3.54)	90 (3.54)	95 (3.74)	95 (3.74)	95 (3.74)	95 (3.74)	125 (4.92)	135 (5.31)	140 (5.51)	155 (6.10)	175 (6.89)	200 (7.87)	225 (8.86)	270 (10.63)	305 (12.01)	350 (13.78)	430 (16.93)	480 (18.90)
	Flange Thickness (incl. lining flare)	t	18.0 (0.71)	18.0 (0.71)	18.0 (0.71)	20.0 (0.79)	20.0 (0.79)	20.0 (0.79)	17.0 (0.67)	22.0 (0.87)	23.0 (0.91)	23.0 (0.91)	23.0 (0.91)	25.0 (0.98)	27.0 (1.06)	29.0 (1.14)	31.0 (1.22)	32.5 (1.28)	34.5 (1.36)	39.0 (1.54)	40.0 (1.57)
	Lining Inner Diameter	ød	2 (0.09)	5 (0.19)	8 (0.30)	2 (0.09)	5 (0.19)	8 (0.30)	13 (0.51)	24 (0.93)	29 (1.13)	37 (1.44)	49 (1.94)	61 (2.40)	73 (2.87)	97 (3.82)	121 (4.76)	145 (5.72)	194 (7.65)	243 (9.55)	292 (11.51)
	Bolt Circle Diameter	øC	65 (2.56)	65 (2.56)	65 (2.56)	70 (2.76)	70 (2.76)	70 (2.76)	70 (2.76)	90 (3.54)	100 (3.94)	105 (4.13)	120 (4.72)	140 (5.51)	160 (6.30)	185 (7.28)	225 (8.86)	260 (10.24)	305 (12.01)	380 (14.96)	430 (16.93)
	Bolt Hole Interval	θ°	45	45	45	45	45	45	45	45	45	45	22.5	22.5	22.5	22.5	22.5	15	15	15	11.25
	Bolt Hole Diameter	øh	15 (0.59)	15 (0.59)	15 (0.59)	15 (0.59)	15 (0.59)	15 (0.59)	15 (0.59)	19 (0.75)	19 (0.75)	19 (0.75)	19 (0.75)	19 (0.75)	23 (0.91)	23 (0.91)	25 (0.98)	25 (0.98)	25 (0.98)	27 (1.06)	27 (1.06)
	Number of Bolt Holes	N	4	4	4	4	4	4	4	4	4	4	8	8	8	8	8	12	12	12	16
	Height	H1	164 (6.46)	164 (6.46)	164 (6.46)	164 (6.46)	164 (6.46)	164 (6.46)	164 (6.46)	143 (5.63)	154 (6.06)	156 (6.14)	177 (6.97)	196 (7.72)	214 (8.43)	237 (9.33)	273 (10.75)	295 (11.61)	343 (13.49)	413 (16.27)	463 (18.22)
	Height	H2	104 (4.09)	104 (4.09)	104 (4.09)	104 (4.09)	104 (4.09)	104 (4.09)	104 (4.09)	80 (3.15)	86 (3.39)	86 (3.39)	99 (3.90)	108 (4.25)	114 (4.49)	124 (4.88)	138 (5.43)	143 (5.61)	168 (6.60)	198 (7.81)	223 (8.77)
	Height	H3	-	-	-	-	-	-	-	-	-	-	-	-	-	-	-	-	-	481 (18.94)	531 (20.91)
Remote Sensor	Maximum Height	Hr	281 (11.06)	281 (11.06)	281 (11.06)	281 (11.06)	281 (11.06)	281 (11.06)	281 (11.06)	260 (10.24)	271 (10.67)	273 (10.75)	294 (11.57)	313 (12.32)	331 (13.03)	354 (13.94)	390 (15.35)	412 (16.23)	460 (18.11)	531 (20.89)	580 (22.84)
	Approx. Weight, Unit: kg (lb) (*2)		3.7 (8.2)	3.7 (8.2)	3.7 (8.2)	3.9 (8.6)	3.9 (8.6)	3.9 (8.6)	4.0 (8.8)	5.2 (11.5)	6.3 (13.9)	6.6 (14.6)	7.5 (16.5)	9.9 (21.8)	13.1 (28.9)	17.7 (39.0)	26.5 (58.4)	36 (79.5)	51 (112.6)	90 (198.7)	108 (238.4)
Integral Flowmeter	Maximum Height	Hi	326 (12.83)	326 (12.83)	326 (12.83)	326 (12.83)	326 (12.83)	326 (12.83)	326 (12.83)	305 (12.01)	316 (12.44)	318 (12.52)	339 (13.35)	358 (14.09)	376 (14.80)	399 (15.71)	435 (17.13)	457 (17.99)	505 (19.87)	575 (22.65)	625 (24.60)
	Approx. Weight, Unit: kg (lb)		6.3 (13.9)	6.3 (13.9)	6.3 (13.9)	6.5 (14.3)	6.5 (14.3)	6.5 (14.3)	6.6 (14.6)	7.7 (17.0)	8.8 (19.4)	9.2 (20.3)	10.0 (22.1)	12.5 (27.6)	15.6 (34.4)	20.2 (44.5)	29.1 (64.2)	39 (86.1)	53 (117.0)	92 (203.1)	111 (245.0)
Grounding rings thin type (GRL, GRH, GRV) (*1)			+2 (+0.08)	+2 (+0.08)	+2 (+0.08)	+2 (+0.08)	+2 (+0.08)	+2 (+0.08)	+2 (+0.08)	+2 (+0.08)	+2 (+0.08)	+2 (+0.08)	+2 (+0.08)	+2 (+0.08)	+2 (+0.08)	+2 (+0.08)	+2 (+0.08)	+2 (+0.08)	+2 (+0.08)	+4 (+0.16)	+4 (+0.16)
Grounding rings thick type (GRN, GRJ, GRW) (*1)			-	-	-	-	-	-	-	+6 (+0.24)	+6 (+0.24)	+6 (+0.24)	+6 (+0.24)	+6 (+0.24)	+6 (+0.24)	+6 (+0.24)	+6 (+0.24)	+6 (+0.24)	+6 (+0.24)	+6 (+0.24)	+6 (+0.24)
Grounding rings thick type (GRN, GRJ, GRW) with gaskets (GA, GC, GD) (*1)			+10 (+0.39)	+10 (+0.39)	+10 (+0.39)	+10 (+0.39)	+10 (+0.39)	+10 (+0.39)	+10 (+0.39)	+10 (+0.39)	+10 (+0.39)	+10 (+0.39)	+10 (+0.39)	+10 (+0.39)	+10 (+0.39)	+10 (+0.39)	+10 (+0.39)	+12 (+0.47)	+12 (+0.47)	-	-
Metal hat grounding rings (GSN, GDN) (*1)			-	-	-	-	-	-	-	-	-	-	-	-	+6 (+0.24)	+6 (+0.24)	+6 (+0.24)	+6 (+0.24)	+6 (+0.24)	+6 (+0.24)	+6 (+0.24)
Grounding rings electrode type (GRP, GRT) (*1)			+28 (+1.10)	+28 (+1.10)	+28 (+1.10)	+28 (+1.10)	+28 (+1.10)	+28 (+1.10)	+28 (+1.10)	+29 (+1.14)	+29 (+1.14)	+29 (+1.14)	+29 (+1.14)	+29 (+1.14)	+29 (+1.14)	+29 (+1.14)	+29 (+1.14)	+34 (+1.34)	+34 (+1.34)	-	-
Grounding rings electrode type (GRP, GRT) with gaskets (GA, GC, GD) (*1)			+32 (+1.26)	+32 (+1.26)	+32 (+1.26)	+32 (+1.26)	+32 (+1.26)	+32 (+1.26)	+32 (+1.26)	+33 (+1.30)	+33 (+1.30)	+33 (+1.30)	+33 (+1.30)	+33 (+1.30)	+33 (+1.30)	+33 (+1.30)	+33 (+1.30)	+40 (+1.57)	+40 (+1.57)	-	-

*1: Add the value above (which is the total of both ends) to the lay length "L" when selecting optional grounding rings with/without gaskets.

*2: When submersible use or optional code DHC is selected, waterproof glands with union joints and cables are attached. When the cable length is 30-meters, add 9.5 kg (20.9 lb) to the weight in the table.

*3: The limit deviation of the lay length "L" is as follows.
- Size 2.5 to 200 mm (0.1 to 8 in.): 0/-3 mm
- Size 250 to 400 mm (10 to 16 in.): 0/-5 mm

Additional weight for FM (USA) Flameproof (FF2, FJ2, FT2)

Size	2.5	5	10	15	25	32	40	50	65	80	100	125	150	200	250	300
Lining Code	A	A	A	A	A	A	A	A	A	A	A	A	A	A	A	A
Flange Approx. Additional Weight, Unit: kg (lb)	-	-	-	-	0.1 (0.22)	0.2 (0.44)	0.2 (0.44)	0.3 (0.66)	0.4 (0.88)	0.4 (0.88)	0.7 (1.54)	0.7 (1.54)	3 (6.61)	4 (8.82)	8 (17.64)	10 (22.05)

All Rights Reserved. Copyright © 2017, Yokogawa Electric Corporation

○ Flange, JPI Class 150

Unit: mm (approx. in.)

Model	Process Connection Code		BP1														
	Size Code		002	005	010	015	025	040	050	080	100	150	200	250	300	350	400
	Size		2.5 (0.1)	5 (0.2)	10 (0.4)	15 (0.5)	25 (1)	40 (1.5)	50 (2)	80 (3)	100 (4)	150 (6)	200 (8)	250 (10)	300 (12)	350 (14)	400 (16)
	Lining Code		A	A	A	A	A	A	A	A	A	A	A	A	A	A	A
Remote Sensor Integral Flowmeter	Lay Length (*1) (*3)	L	148 (5.83)	148 (5.83)	148 (5.83)	198 (7.80)	198 (7.78)	198 (7.78)	198 (7.78)	198 (7.78)	248 (9.74)	298 (11.71)	348 (13.68)	446 (17.54)	496 (19.51)	546 (21.48)	596 (23.44)
	Flange Outer Diameter	øD	90 (3.54)	90 (3.54)	90 (3.54)	90 (3.54)	110 (4.33)	125 (4.92)	150 (5.91)	190 (7.48)	230 (9.06)	280 (11.02)	345 (13.58)	405 (15.94)	485 (19.09)	535 (21.06)	595 (23.43)
	Flange Thickness (incl. lining flare)	t	19.2 (0.76)	19.2 (0.76)	19.2 (0.76)	16.2 (0.64)	20.3 (0.80)	22.5 (0.89)	24.1 (0.95)	28.9 (1.14)	28.9 (1.14)	30.4 (1.20)	33.5 (1.32)	35.6 (1.40)	37.2 (1.46)	40.9 (1.61)	42.5 (1.67)
	Lining Inner Diameter	ød	2 (0.09)	5 (0.19)	8 (0.30)	13 (0.51)	24 (0.93)	37 (1.44)	49 (1.94)	73 (2.87)	97 (3.82)	145 (5.72)	194 (7.65)	243 (9.55)	292 (11.51)	323 (12.73)	374 (14.70)
	Bolt Circle Diameter	øC	60.3 (2.37)	60.3 (2.37)	60.3 (2.37)	60.3 (2.37)	79.4 (3.13)	98.4 (3.87)	120.7 (4.75)	152.4 (6.00)	190.5 (7.50)	241.3 (9.50)	298.5 (11.75)	362.0 (14.25)	431.8 (17.00)	476.3 (18.75)	539.8 (21.25)
	Bolt Hole Interval	θ°	45	45	45	45	45	45	45	45	22.5	22.5	22.5	15	15	15	11.25
	Bolt Hole Diameter	øh	16 (0.63)	16 (0.63)	16 (0.63)	16 (0.63)	16 (0.63)	16 (0.63)	19 (0.75)	19 (0.75)	19 (0.75)	22 (0.87)	22 (0.87)	26 (1.02)	26 (1.02)	29 (1.14)	29 (1.14)
	Number of Bolt Holes	N	4	4	4	4	4	4	4	4	8	8	8	12	12	12	16
	Height	H1	164 (6.46)	164 (6.46)	164 (6.46)	164 (6.46)	135 (5.31)	149 (5.87)	174 (6.85)	209 (8.23)	239 (9.41)	283 (11.12)	340 (13.39)	401 (15.78)	465 (18.32)	512 (20.14)	569 (22.41)
	Height	H2	104 (4.09)	104 (4.09)	104 (4.09)	104 (4.09)	80 (3.15)	86 (3.39)	99 (3.90)	114 (4.49)	124 (4.88)	143 (5.61)	168 (6.60)	198 (7.81)	223 (8.77)	244 (9.61)	272 (10.70)
	Height	H3	-	-	-	-	-	-	-	-	-	-	-	456 (17.95)	536 (21.10)	595 (23.43)	655 (25.79)
Remote Sensor	Maximum Height	Hr	281 (11.06)	281 (11.06)	281 (11.06)	281 (11.06)	252 (9.92)	266 (10.47)	291 (11.46)	326 (12.83)	356 (14.02)	400 (15.74)	457 (18.01)	518 (20.40)	583 (22.94)	629 (24.76)	687 (27.03)
	Approx. Weight, Unit: kg (lb) (*2)		3.7 (8.2)	3.7 (8.2)	3.7 (8.2)	3.8 (8.4)	4.3 (9.5)	5.7 (12.6)	7.7 (17.0)	13.2 (29.1)	18.4 (40.6)	31 (68.4)	50 (110.4)	79 (174.4)	109 (240.6)	135 (298.0)	172 (379.7)
Integral Flowmeter	Maximum Height	Hi	326 (12.83)	326 (12.83)	326 (12.83)	326 (12.83)	297 (11.69)	311 (12.24)	336 (13.23)	371 (14.61)	401 (15.79)	445 (17.50)	502 (19.77)	563 (22.16)	627 (24.69)	674 (26.52)	731 (28.79)
	Approx. Weight, Unit: kg (lb)		6.1 (13.5)	6.1 (13.5)	6.1 (13.5)	6.2 (13.7)	6.8 (15.0)	8.2 (18.1)	10.1 (22.3)	15.7 (34.6)	20.8 (45.9)	34 (75.1)	52 (114.8)	81 (178.8)	111 (245.0)	138 (304.6)	175 (386.3)
Grounding rings thin type (GRL, GRH, GRV) (*1)			+2 (+0.08)	+2 (+0.08)	+2 (+0.08)	+2 (+0.08)	+2 (+0.08)	+2 (+0.08)	+2 (+0.08)	+2 (+0.08)	+2 (+0.08)	+2 (+0.08)	+2 (+0.08)	+4 (+0.16)	+4 (+0.16)	+4 (+0.16)	+4 (+0.16)
Grounding rings thick type (GRN, GRJ, GRW) (*1)			-	-	-	-	+6 (+0.24)	+6 (+0.24)	+6 (+0.24)	+6 (+0.24)	+6 (+0.24)	+6 (+0.24)	+6 (+0.24)	+6 (+0.24)	+6 (+0.24)	+6 (+0.24)	+6 (+0.24)
Grounding rings thick type (GRN, GRJ, GRW) with gaskets (GA, GC, GD) (*1)			+10 (+0.39)	+10 (+0.39)	+10 (+0.39)	+10 (+0.39)	+10 (+0.39)	+10 (+0.39)	+10 (+0.39)	+10 (+0.39)	+10 (+0.39)	+12 (+0.47)	+12 (+0.47)	-	-	-	-
Metal hat grounding rings (GSN, GDN) (*1)			-	-	-	-	-	-	-	+6 (+0.24)	+6 (+0.24)	+6 (+0.24)	+6 (+0.24)	+6 (+0.24)	+6 (+0.24)	+6 (+0.24)	+6 (+0.24)
Grounding rings electrode type (GRP, GRT) (*1)			+28 (+1.10)	+28 (+1.10)	+28 (+1.10)	+28 (+1.10)	+29 (+1.14)	+29 (+1.14)	+29 (+1.14)	+29 (+1.14)	+29 (+1.14)	+34 (+1.34)	+34 (+1.34)	-	-	-	-
Grounding rings electrode type (GRP, GRT) with gaskets (GA, GC, GD) (*1)			+32 (+1.26)	+32 (+1.26)	+32 (+1.26)	+32 (+1.26)	+33 (+1.30)	+33 (+1.30)	+33 (+1.30)	+33 (+1.30)	+33 (+1.30)	+40 (+1.57)	+40 (+1.57)	-	-	-	-

*1: Add the value above (which is the total of both ends) to the lay length "L" when selecting optional grounding rings with/without gaskets.

*2: When submersible use or optional code DHC is selected, waterproof glands with union joints and cables are attached. When the cable length is 30-meters, add 9.5 kg (20.9 lb) to the weight in the table.

*3: The limit deviation of the lay length "L" is as follows.
- Size 2.5 to 200 mm (0.1 to 8 in.): 0/-3 mm
- Size 250 to 400 mm (10 to 16 in.): 0/-5 mm

Additional weight for FM (USA) Flameproof (FF2, FJ2, FT2)

Size	2.5	5	10	15	25	40	50	80	100	150	200	250	300	350	400
Lining Code	A	A	A	A	A	A	A	A	A	A	A	A	A	A	A
Flange Approx. Additional Weight, Unit: kg (lb)	-	-	-	-	0.1 (0.22)	0.2 (0.44)	0.3 (0.66)	0.4 (0.88)	0.7 (1.54)	3 (6.61)	4 (8.82)	8 (17.64)	10 (22.05)	18 (39.68)	25 55.12)

All Rights Reserved. Copyright © 2017, Yokogawa Electric Corporation

○ Flange, AS Table D

Unit: mm (approx. in.)

Model	Process Connection Code		CS1								
	Size Code		050	080	100	150	200	250	300	350	400
	Size		50 (2)	80 (3)	100 (4)	150 (6)	200 (8)	250 (10)	300 (12)	350 (14)	400 (16)
	Lining Code		A	A	A	A	A	A	A	A	A
Remote Sensor Integral Flowmeter	Lay Length (*1) (*3)	L	198 (7.78)	198 (7.78)	248 (9.74)	298 (11.71)	348 (13.68)	446 (17.54)	496 (19.51)	546 (21.48)	596 (23.44)
	Flange Outer Diameter	øD	150 (5.91)	185 (7.28)	215 (8.46)	280 (11.02)	335 (13.19)	405 (15.94)	455 (17.91)	525 (20.67)	580 (22.83)
	Flange Thickness (incl. lining flare)	t	13.0 (0.51)	15.0 (0.59)	15.0 (0.59)	17.9 (0.70)	17.9 (0.70)	21.4 (0.84)	24.4 (0.96)	27.9 (1.10)	27.9 (1.10)
	Lining Inner Diameter	ød	49 (1.94)	73 (2.87)	97 (3.82)	145 (5.72)	194 (7.65)	243 (9.55)	292 (11.51)	323 (12.73)	374 (14.70)
	Bolt Circle Diameter	øC	114 (4.49)	146 (5.75)	178 (7.01)	235 (9.25)	292 (11.50)	356 (14.02)	406 (15.98)	470 (18.50)	521 (20.51)
	Bolt Hole Interval	θ°	45	45	45	22.5	22.5	22.5	15	15	15
	Bolt Hole Diameter	øh	18 (0.71)	18 (0.71)	18 (0.71)	18 (0.71)	18 (0.71)	22 (0.87)	22 (0.87)	26 (1.02)	26 (1.02)
	Number of Bolt Holes	N	4	4	4	8	8	8	12	12	12
	Height	H1	174 (6.85)	207 (8.15)	232 (9.13)	283 (11.12)	335 (13.19)	401 (15.78)	450 (17.73)	507 (19.94)	562 (22.12)
	Height	H2	99 (3.90)	114 (4.49)	124 (4.88)	143 (5.61)	168 (6.60)	198 (7.81)	223 (8.77)	244 (9.61)	272 (10.70)
	Height	H3	-	-	-	-	-	438 (17.26)	497 (19.55)	576 (22.68)	631 (24.84)
Remote Sensor	Maximum Height	Hr	291 (11.46)	324 (12.76)	349 (13.74)	400 (15.74)	452 (17.81)	518 (20.40)	568 (22.34)	624 (24.56)	679 (26.74)
	Approx. Weight, Unit: kg (lb) (*2)		5.5 (12.1)	8.7 (19.2)	11.8 (26.0)	25 (55.2)	37 (81.7)	65 (143.5)	80 (176.6)	105 (231.8)	131 (289.2)
Integral Flowmeter	Maximum Height	Hi	336 (13.23)	369 (14.53)	394 (15.51)	445 (17.50)	497 (19.57)	563 (22.16)	612 (24.10)	669 (26.32)	724 (28.50)
	Approx. Weight, Unit: kg (lb)		7.9 (17.4)	11.1 (24.5)	14.2 (31.3)	27 (59.6)	39 (86.1)	67 (147.9)	82 (181.0)	107 (236.2)	133 (293.6)
Grounding rings thin type (GRL, GRH, GRV) (*1)			+2 (+0.08)	+2 (+0.08)	+2 (+0.08)	+2 (+0.08)	+2 (+0.08)	+4 (+0.16)	+4 (+0.16)	+4 (+0.16)	+4 (+0.16)
Grounding rings thick type (GRN, GRJ, GRW) (*1)			+6 (+0.24)	+6 (+0.24)	+6 (+0.24)	+6 (+0.24)	+6 (+0.24)	+6 (+0.24)	+6 (+0.24)	+6 (+0.24)	+6 (+0.24)
Grounding rings thick type (GRN, GRJ, GRW) with gaskets (GA, GC, GD) (*1)			+10 (+0.39)	+10 (+0.39)	+10 (+0.39)	+12 (+0.47)	+12 (+0.47)	-	-	-	-
Metal hat grounding rings (GSN, GDN) (*1)			-	+6 (+0.24)	+6 (+0.24)	+6 (+0.24)	+6 (+0.24)	+6 (+0.24)	+6 (+0.24)	+6 (+0.24)	+6 (+0.24)
Grounding rings electrode type (GRP, GRT) (*1)			+29 (+1.14)	+29 (+1.14)	+29 (+1.14)	+34 (+1.34)	+34 (+1.34)	-	-	-	-
Grounding rings electrode type (GRP, GRT) with gaskets (GA, GC, GD) (*1)			+33 (+1.30)	+33 (+1.30)	+33 (+1.30)	+40 (+1.57)	+40 (+1.57)	-	-	-	-

*1: Add the value above (which is the total of both ends) to the lay length "L" when selecting optional grounding rings with/without gaskets.

*2: When submersible use or optional code DHC is selected, waterproof glands with union joints and cables are attached. When the cable length is 30-meters, add 9.5 kg (20.9 lb) to the weight in the table.

*3: The limit deviation of the lay length "L" is as follows.
- Size 2.5 to 200 mm (0.1 to 8 in.): 0/-3 mm
- Size 250 to 400 mm (10 to 16 in.): 0/-5 mm

Additional weight for FM (USA) Flameproof (FF2, FJ2, FT2)

Size	50	80	100	150	200	250	300	350	400
Lining Code	A	A	A	A	A	A	A	A	A
Flange Approx. Additional Weight, Unit: kg (lb)	0.3 (0.66)	0.4 (0.88)	0.7 (1.54)	3 (6.61)	4 (8.82)	8 (17.64)	10 (22.05)	18 (39.68)	25 (55.12)

All Rights Reserved. Copyright © 2017, Yokogawa Electric Corporation

○ Flange, AS Table E

Unit: mm (approx. in.)

Model	Process Connection Code		CS2						
	Size Code		050	080	100	150	200	250	300
	Size		50 (2)	80 (3)	100 (4)	150 (6)	200 (8)	250 (10)	300 (12)
	Lining Code		A	A	A	A	A	A	A
Remote Sensor Integral Flowmeter	Lay Length (*1) (*3)	L	198 (7.78)	198 (7.78)	248 (9.74)	298 (11.71)	348 (13.68)	446 (17.54)	496 (19.51)
	Flange Outer Diameter	øD	150 (5.91)	185 (7.28)	215 (8.46)	280 (11.02)	335 (13.19)	405 (15.94)	455 (17.91)
	Flange Thickness (incl. lining flare)	t	15.0 (0.59)	16.0 (0.63)	18.0 (0.71)	21.9 (0.86)	23.9 (0.94)	27.4 (1.08)	30.4 (1.20)
	Lining Inner Diameter	ød	49 (1.94)	73 (2.87)	97 (3.82)	145 (5.72)	194 (7.65)	243 (9.55)	292 (11.51)
	Bolt Circle Diameter	øC	114 (4.49)	146 (5.75)	178 (7.01)	235 (9.25)	292 (11.50)	356 (14.02)	406 (15.98)
	Bolt Hole Interval	θ°	45	45	22.5	22.5	22.5	15	15
	Bolt Hole Diameter	øh	18 (0.71)	18 (0.71)	18 (0.71)	22 (0.87)	22 (0.87)	22 (0.87)	26 (1.02)
	Number of Bolt Holes	N	4	4	8	8	8	12	12
	Height	H1	174 (6.85)	207 (8.15)	232 (9.13)	283 (11.12)	335 (13.19)	401 (15.78)	450 (17.73)
	Height	H2	99 (3.90)	114 (4.49)	124 (4.88)	143 (5.61)	168 (6.60)	198 (7.81)	223 (8.77)
	Height	H3	-	-	-	-	-	456 (17.95)	506 (19.92)
Remote Sensor	Maximum Height	Hr	291 (11.46)	324 (12.76)	349 (13.74)	400 (15.74)	452 (17.81)	518 (20.40)	568 (22.34)
	Approx. Weight, Unit: kg (lb) (*2)		5.9 (13.0)	8.9 (19.6)	12.5 (27.6)	28 (61.8)	42 (92.7)	72 (158.9)	89 (196.5)
Integral Flowmeter	Maximum Height	Hi	336 (13.23)	369 (14.53)	394 (15.51)	445 (17.50)	497 (19.57)	563 (22.16)	612 (24.10)
	Approx. Weight, Unit: kg (lb)		8.3 (18.3)	11.3 (24.9)	15.0 (33.1)	30 (66.2)	44 (97.1)	74 (163.4)	91 (200.9)
Grounding rings thin type (GRL, GRH, GRV) (*1)			+2 (+0.08)	+2 (+0.08)	+2 (+0.08)	+2 (+0.08)	+2 (+0.08)	+4 (+0.16)	+4 (+0.16)
Grounding rings thick type (GRN, GRJ, GRW) (*1)			+6 (+0.24)	+6 (+0.24)	+6 (+0.24)	+6 (+0.24)	+6 (+0.24)	+6 (+0.24)	+6 (+0.24)
Grounding rings thick type (GRN, GRJ, GRW) with gaskets (GA, GC, GD) (*1)			+10 (+0.39)	+10 (+0.39)	+10 (+0.39)	+12 (+0.47)	+12 (+0.47)	-	-
Metal hat grounding rings (GSN, GDN) (*1)			-	+6 (+0.24)	+6 (+0.24)	+6 (+0.24)	+6 (+0.24)	+6 (+0.24)	+6 (+0.24)
Grounding rings electrode type (GRP, GRT) (*1)			+29 (+1.14)	+29 (+1.14)	+29 (+1.14)	+34 (+1.34)	+34 (+1.34)	-	-
Grounding rings electrode type (GRP, GRT) with gaskets (GA, GC, GD) (*1)			+33 (+1.30)	+33 (+1.30)	+33 (+1.30)	+40 (+1.57)	+40 (+1.57)	-	-

*1: Add the value above (which is the total of both ends) to the lay length "L" when selecting optional grounding rings with/without gaskets.

*2: When submersible use or optional code DHC is selected, waterproof glands with union joints and cables are attached. When the cable length is 30-meters, add 9.5 kg (20.9 lb) to the weight in the table.

*3: The limit deviation of the lay length "L" is as follows.
- Size 2.5 to 200 mm (0.1 to 8 in.): 0/-3 mm
- Size 250 to 400 mm (10 to 16 in.): 0/-5 mm

Additional weight for FM (USA) Flameproof (FF2, FJ2, FT2)

Size	50	80	100	150	200	250	300
Lining Code	A	A	A	A	A	A	A
Flange Approx. Additional Weight, Unit: kg (lb)	0.3 (0.66)	0.4 (0.88)	0.7 (1.54)	3 (6.61)	4 (8.82)	8 (17.64)	10 (22.05)

All Rights Reserved. Copyright © 2017, Yokogawa Electric Corporation

● **Flange (PFA Lining, High Pressure Type)**

Unit: mm (approx. in.)

Size 25 to 50 mm (1 to 2 in.)

AXG025
AXG040 -□□□□□**E**□□**A**
AXG050

Size Code

Process Connection Code

Lining Code

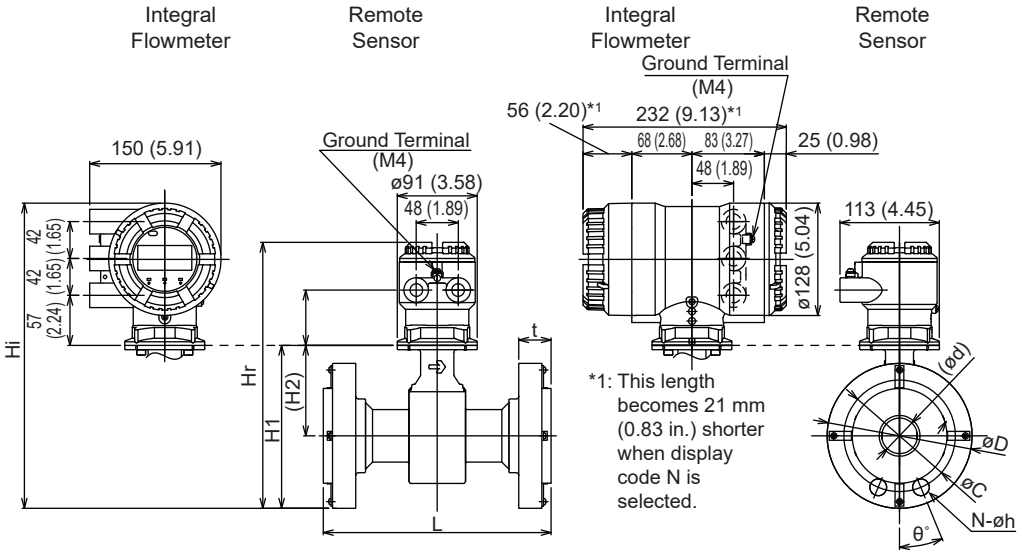

F41.ai

Size 80 to 100 mm (3 to 4 in.)

AXG080
AXG100 -□□□□□**E**□□**A**

Size Code

Process Connection Code

Lining Code

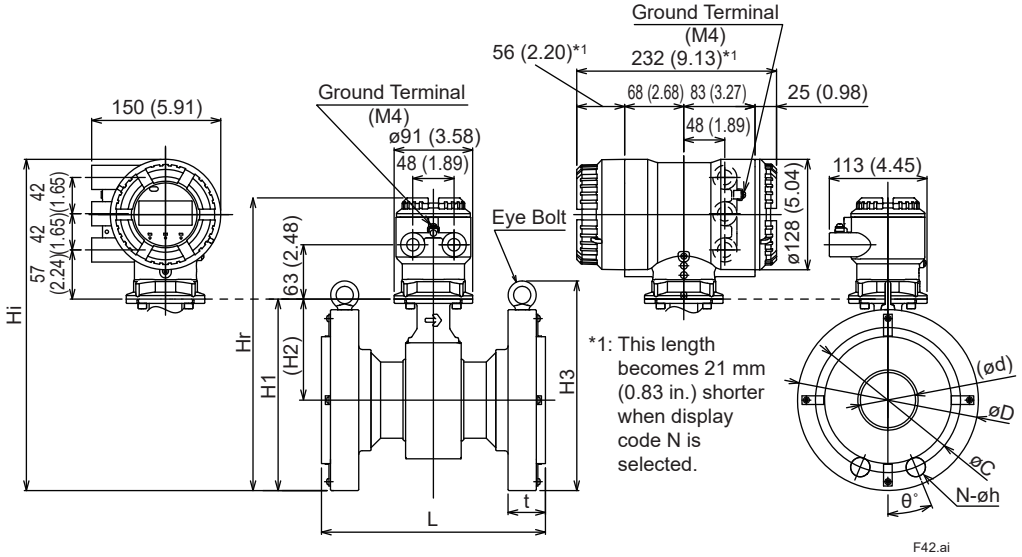

F42.ai

All Rights Reserved. Copyright © 2017, Yokogawa Electric Corporation

○ Flange, ASME Class 600

Unit: mm (approx. in.)

Model	Process Connection Code		EA4				
	Size Code		025	040	050	080	100
	Size		25 (1)	40 (1.5)	50 (2)	80 (3)	100 (4)
	Lining Code		A	A	A	A	A
Remote Sensor Integral Flowmeter	Lay Length (*1) (*3)	L	211 (8.31)	263 (10.35)	263 (10.35)	263 (10.35)	313 (12.32)
	Flange Outer Diameter	øD	124.0 (4.88)	155.5 (6.12)	165.1 (6.50)	209.6 (8.25)	273.1 (10.75)
	Flange Thickness (incl. lining flare)	t	29.0 (1.14)	34.4 (1.35)	37.4 (1.47)	43.8 (1.72)	50.1 (1.97)
	Lining Inner Diameter	ød	24 (0.93)	29 (1.16)	41 (1.59)	64 (2.52)	87 (3.43)
	Bolt Circle Diameter	øC	88.9 (3.50)	114.3 (4.50)	127.0 (5.00)	168.1 (6.62)	215.9 (8.50)
	Bolt Hole Interval	θ°	45	45	22.5	22.5	22.5
	Bolt Hole Diameter	øh	19.1 (0.75)	22.4 (0.88)	19.1 (0.75)	22.4 (0.88)	25.4 (1.00)
	Number of Bolt Holes	N	4	4	8	8	8
	Height	H1	148 (5.83)	167 (6.57)	185 (7.28)	222 (8.74)	265 (10.43)
	Height	H2	86 (3.38)	90 (3.53)	103 (4.05)	117 (4.61)	129 (5.07)
	Height	H3	-	-	-	243 (9.57)	306 (12.05)
Remote Sensor	Maximum Height	Hr	265 (10.43)	284 (11.18)	302 (11.89)	339 (13.35)	382 (15.04)
	Approx. Weight, Unit: kg (lb) (*2)		5.8 (12.8)	9.2 (20.3)	11.0 (24.3)	19.4 (42.8)	36.9 (81.4)
Integral Flowmeter	Maximum Height	Hi	310 (12.20)	329 (12.95)	347 (13.66)	384 (15.12)	427 (16.81)
	Approx. Weight, Unit: kg (lb)		8.2 (18.1)	11.6 (25.6)	13.4 (29.5)	21.9 (48.3)	39.3 (86.6)

*1: The lay length “L” includes the thickness of the grounding rings (GRN) which always needs to be selected.

*2: When submersible use or optional code DHC is selected, waterproof glands with union joints and cables are attached. When the cable length is 30-meters, add 9.5 kg (20.9 lb) to the weight in the table.

*3: The limit deviation of the lay length “L” is as follows.
- Size 25 mm (1 in.): 0/-4 mm
- Size 40 to 100 mm (1.5 to 4 in.): 0/-5 mm

All Rights Reserved. Copyright © 2017, Yokogawa Electric Corporation

● Ceramics Tube (Union Joint)

Unit: mm (approx. in.)

Size 2.5 to 10 mm (0.1 to 0.4 in.)

AXG002
AXG005 -□□□□□G□□C
AXG010

Size Code

Process Connection Code

Lining Code

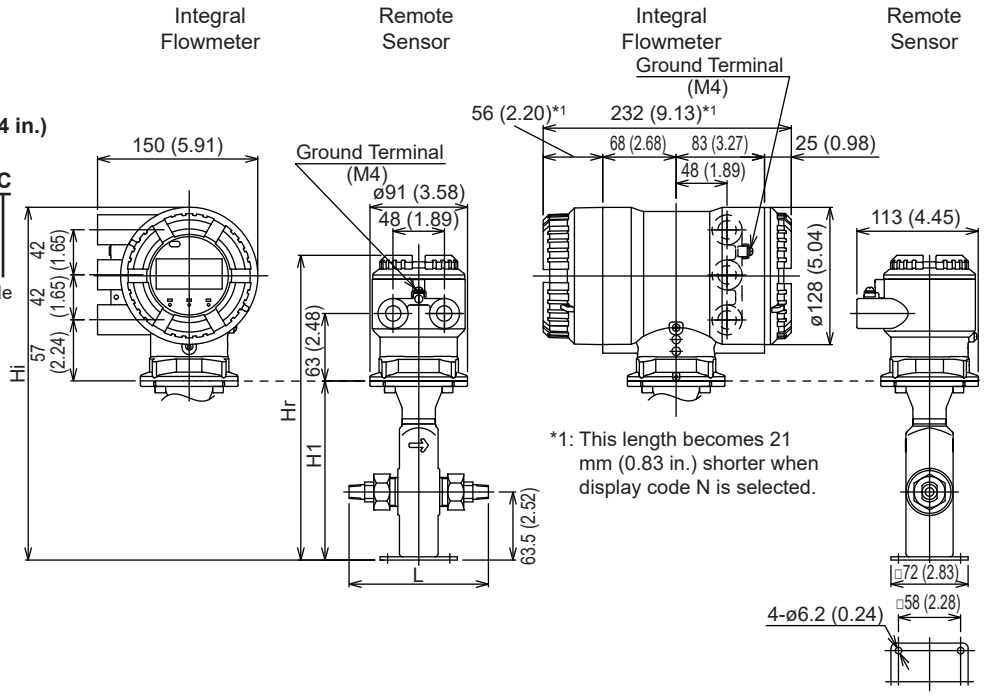

Unit: mm (approx. in.)

Model	Process Connection Code		GUN, GUR: Screw Union Joint			GUW: Welding Union Joint		
	Size Code		002	005	010	002	005	010
	Size		2.5 (0.1)	5 (0.2)	10 (0.4)	2.5 (0.1)	5 (0.2)	10 (0.4)
	Lining Code		C	C	C	C	C	C
Remote Sensor	Lay Length	L	130 (5.12)			140 (5.51)		
Integral Flowmeter	Height	H1	167 (6.57)			167 (6.57)		
Remote Sensor	Maximum Height	Hr	284 (11.18)			284 (11.18)		
	Approx. Weight, Unit: kg (lb) (*1)		2.7 (6.0)			2.7 (6.0)		
Integral Flowmeter	Maximum Height	Hi	329 (12.95)			329 (12.95)		
	Approx. Weight, Unit: kg (lb)		5.2 (11.5)			5.2 (11.5)		

*1: When optional code DHC is selected, waterproof glands with union joints and cables are attached.
When the cable length is 30-meters, add 9.5 kg (20.9 lb) to the weight in the table.

Process Connection Code	GUN: Screw Union Joint		
Size	2.5(0.1)	5(0.2)	10(0.4)
øA	22(0.87)	22(0.87)	25(0.98)
øB	8(0.31)	8(0.31)	10(0.39)
øC	18.5(0.73)	18.5(0.73)	22.5(0.89)
D	NPT1/4	NPT1/4	NPT3/8

Process Connection Code	GUR: Screw Union Joint		
Size	2.5(0.1)	5(0.2)	10(0.4)
øA	22(0.87)	22(0.87)	25(0.98)
øB	8(0.31)	8(0.31)	10(0.39)
øC	18.5(0.73)	18.5(0.73)	22.5(0.89)
D	R1/4	R1/4	R3/8

Process Connection Code	GUW: Welding Union Joint		
Size	2.5(0.1)	5(0.2)	10(0.4)
øA	22(0.87)	22(0.87)	25(0.98)
øB	8(0.31)	8(0.31)	10(0.39)
øC	14.3(0.56)	14.3(0.56)	17.8(0.70)
øD	18.5(0.73)	18.5(0.73)	22.5(0.89)

All Rights Reserved. Copyright © 2017, Yokogawa Electric Corporation

● **Ceramics Tube (Wafer)**

Unit: mm (approx. in.)

Size 15 mm (0.5 in.)

AXG015 -□□□□□**A**□□**C**

Size Code

Process Connection Code

Lining Code

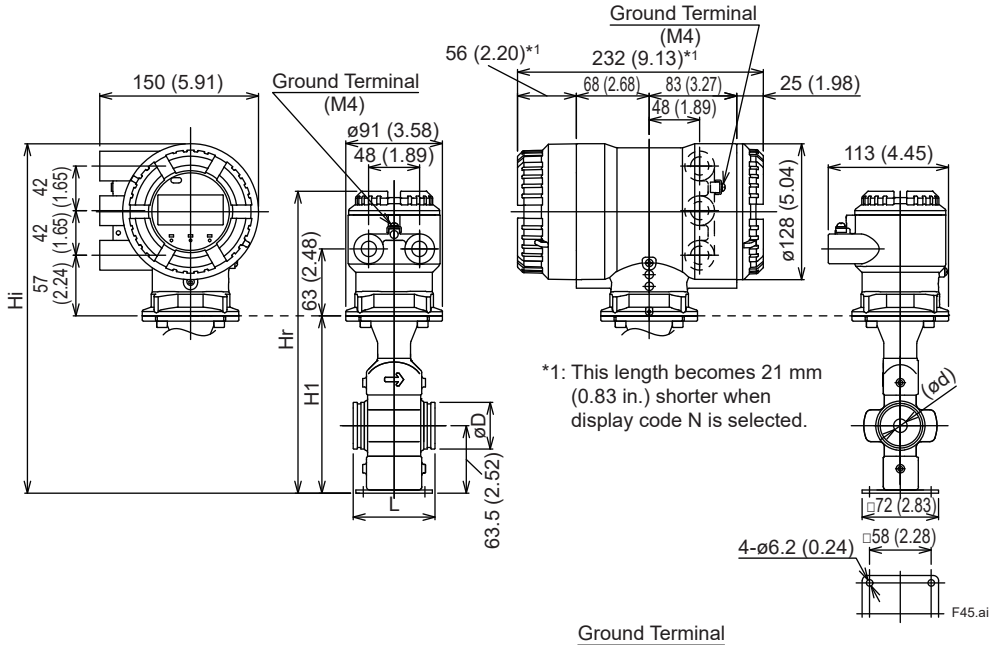

Size 25 to 100 mm (1 to 4 in.)

AXG025
AXG040
AXG050 -□□□□□**A**□□**C**
AXG080
AXG100

Size Code

Process Connection Code

Lining Code

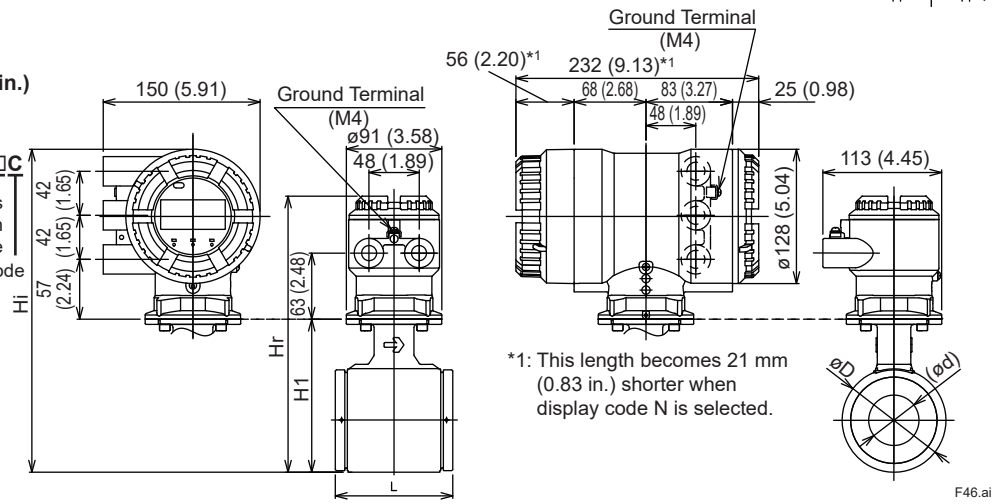

Size 150 to 200 mm (6 to 8 in.)

AXG150
AXG200 -□□□□□**A**□□**C**

Size Code

Process Connection Code

Lining Code

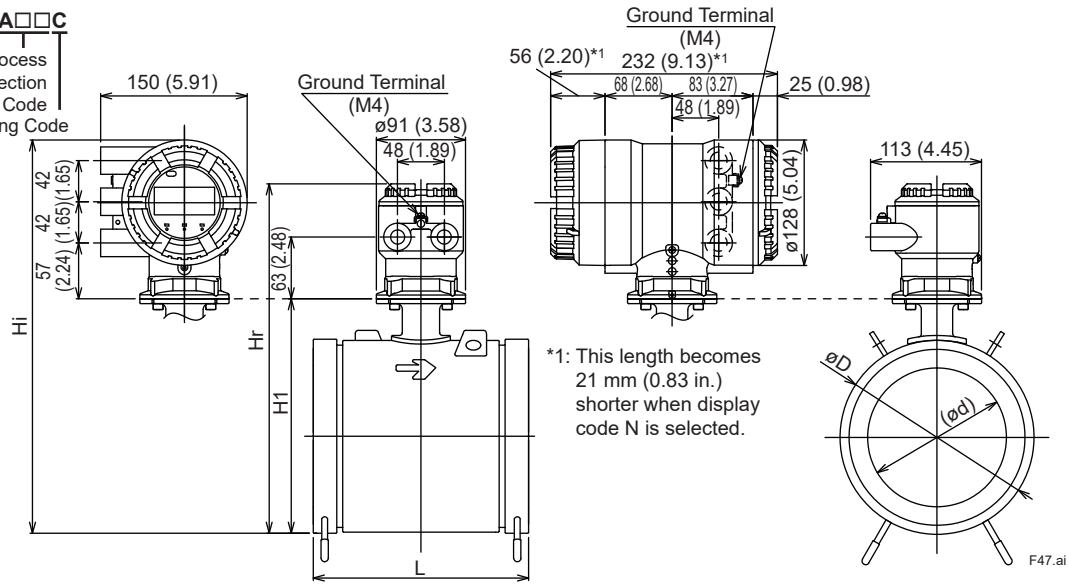

All Rights Reserved. Copyright © 2017, Yokogawa Electric Corporation

Unit: mm (approx. in.)

Model	Process Connection Code		AA1, AA2, AJ1, AJ2						AA1, AJ1	AA2, AJ2	AA1, AJ1	AA2, AJ2
			AE4				AE2		AE2	-	AE2	-
			-	-	-	-	-	-	-	-	AE1	-
			-	-	-	-	AG1		AG1	-	AG1	-
	Size Code		015	025	040	050	080	100	150	150	200	200
	Size		15 (0.5)	25 (1)	40 (1.5)	50 (2)	80 (3)	100 (4)	150 (6)	150 (6)	200 (8)	200 (8)
	Lining Code		C	C	C	C	C	C	C	C	C	C
Remote Sensor Integral Flowmeter	Lay Length (*1)	L	79 (3.11)	87 (3.43)	100 (3.94)	114 (4.49)	154 (6.06)	174 (6.85)	226 (8.90)	226 (8.90)	296 (11.65)	296 (11.65)
	Outer Diameter	øD	44 (1.73)	67.5 (2.66)	86 (3.39)	99 (3.90)	129 (5.08)	155 (6.10)	214 (8.43)	214 (8.43)	264 (10.39)	264 (10.39)
	Pipe Inner Diameter	ød	13 (0.51)	23 (0.91)	36 (1.42)	48 (1.89)	73 (2.87)	93 (3.66)	141 (5.55)	141 (5.55)	187 (7.36)	187 (7.36)
	Height	H1	167 (6.57)	110 (4.33)	129 (5.08)	148 (5.83)	175 (6.89)	201 (7.91)	255 (10.04)	273 (10.75)	305 (12.02)	323 (12.72)
Remote Sensor	Maximum Height	Hr	284 (11.18)	227 (8.94)	246 (9.69)	265 (10.43)	292 (11.50)	318 (12.52)	372 (14.66)	390 (15.35)	423 (16.63)	441 (17.36)
	Approx. Weight, Unit: kg (lb) (*3)		2.7 (6.0)	2.7 (6.0)	3.6 (7.9)	4.5 (9.9)	7.2 (15.9)	10.1 (22.3)	21 (46.4)	21 (46.4)	34 (75.1)	34 (75.1)
Integral Flowmeter	Maximum Height	Hi	329 (12.95)	272 (10.71)	291 (11.46)	310 (12.20)	337 (13.27)	363 (14.29)	417 (16.42)	435 (17.13)	467 (18.39)	485 (19.09)
	Approx. Weight, Unit: kg (lb)		5.2 (11.5)	5.2 (11.5)	6.1 (13.5)	7.0 (15.4)	9.7 (21.4)	12.6 (27.8)	23 (50.8)	23 (50.8)	36 (79.5)	36 (79.5)
Gaskets (BSC, BSF) (*1)			+6 (+0.24)	+6 (+0.24)	+6 (+0.24)	+6 (+0.24)	+6 (+0.24)	+6 (+0.24)	+6 (+0.24)	+6 (+0.24)	+6 (+0.24)	+6 (+0.24)
Grounding rings thick type (GRN, GRJ, GRW) (*1)			+6 (+0.24)	+6 (+0.24)	+6 (+0.24)	+6 (+0.24)	+6 (+0.24)	+6 (+0.24)	+6 (+0.24)	+6 (+0.24)	+6 (+0.24)	+6 (+0.24)
Grounding rings thick type (GRN, GRJ, GRW) and gaskets (BSC, BSF) (*1)			+12 (+0.47)	+12 (+0.47)	+12 (+0.47)	+12 (+0.47)	+12 (+0.47)	+12 (+0.47)	+12 (+0.47)	+12 (+0.47)	+12 (+0.47)	+12 (+0.47)
Grounding rings thick type (GRN, GRJ, GRW) with gaskets (GA, GC, GD, GF) (*1) (*2)			+6 (+0.24)	+6 (+0.24)	+6 (+0.24)	+6 (+0.24)	+6 (+0.24)	+6 (+0.24)	+6 (+0.24)	+6 (+0.24)	+6 (+0.24)	+6 (+0.24)
Grounding rings thick type (GRN, GRJ, GRW) with gaskets (GA, GC, GD, GF) and gaskets (BSC, BSF) (*1) (*2)			+12 (+0.47)	+12 (+0.47)	+12 (+0.47)	+12 (+0.47)	+12 (+0.47)	+12 (+0.47)	+12 (+0.47)	+12 (+0.47)	+12 (+0.47)	+12 (+0.47)
Grounding rings electrode type (GRP, GRT) (*1)			+28 (+1.10)	+28 (+1.10)	+28 (+1.10)	+28 (+1.10)	+28 (+1.10)	+28 (+1.10)	+36 (+1.42)	+36 (+1.42)	+36 (+1.42)	+36 (+1.42)
Grounding rings electrode type (GRP, GRT) and gaskets (BSC, BSF) (*1)			+34 (+1.34)	+34 (+1.34)	+34 (+1.34)	+34 (+1.34)	+34 (+1.34)	+34 (+1.34)	+42 (+1.65)	+42 (+1.65)	+42 (+1.65)	+42 (+1.65)
Grounding rings electrode type (GRP, GRT) with gaskets (GA, GC, GD, GF) (*1) (*2)			+28 (+1.10)	+28 (+1.10)	+28 (+1.10)	+28 (+1.10)	+28 (+1.10)	+28 (+1.10)	+36 (+1.42)	+36 (+1.42)	+36 (+1.42)	+36 (+1.42)
Grounding rings electrode type (GRP, GRT) with gaskets (GA, GC, GD, GF) and gaskets (BSC, BSF) (*1) (*2)			+34 (+1.34)	+34 (+1.34)	+34 (+1.34)	+34 (+1.34)	+34 (+1.34)	+34 (+1.34)	+42 (+1.65)	+42 (+1.65)	+42 (+1.65)	+42 (+1.65)

*1: The lay length "L" includes the thickness of two gaskets which are supplied with the flowmeter. Be sure to always use the supplied gaskets. Add the value above (which is the total of both ends including the supplied two gaskets) to the lay length "L" when selecting optional grounding rings with/without gaskets.

*2: When the optional code GA, GC, GD, or GF is selected, two gaskets which are supplied with the flowmeter are changed to the gaskets selected by the optional code.

*3: When optional code DHC is selected, waterproof glands with union joints and cables are attached.
When the cable length is 30-meters, add 9.5 kg (20.9 lb) to the weight in the table.

All Rights Reserved. Copyright © 2017, Yokogawa Electric Corporation

● Hygienic Use (Clamp, PFA Lining)

Unit: mm (approx. in.)

Size 15 to 125 mm (0.5 to 5 in.)

AXG015
AXG025
AXG032
AXG040
AXG050 -H□□□□H□□A
AXG065
AXG080
AXG100
AXG125

Process Connection Code

Lining Code

Size Code

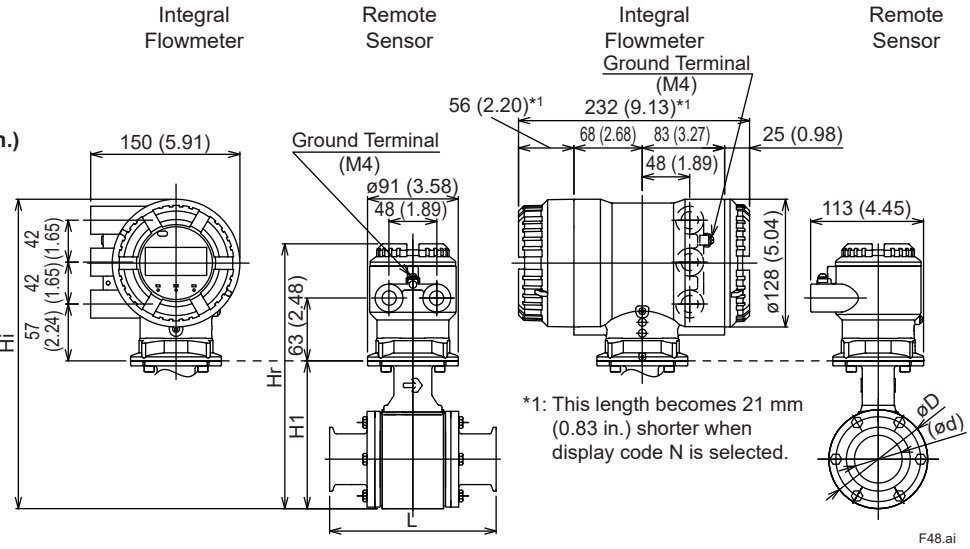

Unit: mm (approx. in.)

Model	Process Connection Code		HAB: Tri-Clamp (not applicable for size code 032 and 125) HDB: DIN 32676 Clamp HKB: ISO 2852 / SMS 3016 Clamp HJA, HJB: ISO 2852 Clamp (for JIS G3447 Piping)								
	Size Code		015	025	032	040	050	065	080	100	125
	Size		15 (0.5)	25 (1)	32 (1.25)	40 (1.5)	50 (2)	65 (2.5)	80 (3)	100 (4)	125 (5)
	Lining Code		A	A	A	A	A	A	A	A	A
Remote Sensor Integral Flowmeter	Lay Length	L	166 (6.54)	166 (6.54)	166 (6.54)	166 (6.54)	176 (6.93)	196 (7.72)	216 (8.50)	246 (9.69)	316 (12.44)
	Outer Diameter	øD	73 (2.87)	73 (2.87)	73 (2.87)	86 (3.39)	99 (3.90)	117 (4.61)	129 (5.08)	155 (6.10)	183 (7.20)
	Height	H1	116 (4.57)	116 (4.57)	116 (4.57)	129 (5.08)	149 (5.87)	166 (6.54)	176 (6.93)	202 (7.95)	230 (9.06)
Remote Sensor	Maximum Height	Hr	233 (9.17)	233 (9.17)	233 (9.17)	246 (9.69)	266 (10.47)	283 (11.14)	293 (11.54)	319 (12.56)	347 (13.66)
	Approx. Weight, Unit: kg (lb) (*1)		3.1 (6.8)	2.9 (6.4)	3.0 (6.6)	3.3 (7.3)	4.1 (9.0)	5.4 (11.9)	6.4 (14.1)	9.1 (20.1)	13.5 (29.8)
Integral Flowmeter	Maximum Height	Hi	278 (10.94)	278 (10.94)	278 (10.94)	291 (11.46)	311 (12.24)	328 (12.91)	338 (13.31)	364 (14.33)	392 (15.43)
	Approx. Weight, Unit: kg (lb)		5.6 (12.4)	5.4 (11.9)	5.5 (12.1)	5.8 (12.8)	6.7 (14.8)	7.9 (17.4)	8.9 (19.6)	11.7 (25.8)	16.1 (35.5)

*1: When optional code DHC is selected, waterproof glands with union joints and cables are attached. When the cable length is 30-meters, add 9.5 kg (20.9 lb) to the weight in the table.

Additional weight for FM (USA) Flameproof (FF2, FJ2, FT2) and FM (Canada) Flameproof (CF2, CJ2, CT2)

Size	15	25	32	40	50	65	80	100	125
Lining Code	A	A	A	A	A	A	A	A	A
Hygienic Approx. Additional Weight, Unit: kg (lb)	0.1 (0.22)	0.1 (0.22)	0.1 (0.22)	0.2 (0.44)	0.3 (0.66)	0.5 (1.10)	0.8 (1.76)	1.3 (2.87)	1.8 (3.97)

All Rights Reserved. Copyright © 2017, Yokogawa Electric Corporation

○ Clamp Connection Adapter

Unit: mm (approx. in.)

Process Connection Code	HAB: Tri-Clamp						
Size Code	015	025	040	050	065	080	100
Size	15 (0.5)	25 (1)	40 (1.5)	50 (2)	65 (2.5)	80 (3)	100 (4)
øA	70 (2.76)	70 (2.76)	83 (3.27)	96 (3.78)	114 (4.49)	126 (4.96)	152 (5.98)
øB	16.0 (0.63)	22.2 (0.87)	34.6 (1.36)	47.6 (1.87)	59.5 (2.34)	72.3 (2.85)	97.0 (3.82)
øC	19.2 (0.76)	25.4 (1.00)	38.1 (1.50)	50.8 (2.00)	63.5 (2.50)	76.2 (3.00)	101.6 (4.00)
ød	15.7 (0.62)	22.1 (0.87)	34.8 (1.37)	47.5 (1.87)	60.2 (2.37)	72.9 (2.37)	97.4 (3.83)
øE	-	43.6 (1.72)	43.6 (1.72)	56.3 (2.22)	70.6 (2.78)	83.3 (3.28)	110.3 (4.34)
øF	25.0 (0.98)	50.4 (1.98)	50.4 (1.98)	64.0 (2.52)	77.4 (3.05)	91.0 (3.58)	118.9 (4.68)
G	50 (1.97)	50 (1.97)	50 (1.97)	50 (1.97)	50 (1.97)	50 (1.97)	50 (1.97)
Parts No. (HAB)	F9811 HU	F9811 HV	F9811 HX	F9811 HY	F9811 HZ	F9811 JA	F9811 JB

HAB, HDB, HKB, HJA, HJB

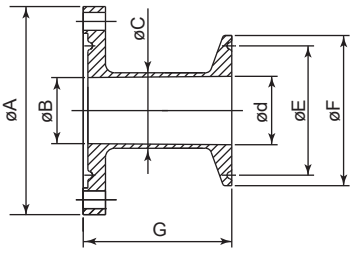

F49.ai

Clamp Connection Adapter

Unit: mm (approx. in.)

Process Connection Code	HDB: DIN 32676 Clamp								
Size Code	015	025	032	040	050	065	080	100	125
Size	15 (0.5)	25 (1)	32 (1.25)	40 (1.5)	50 (2)	65 (2.5)	80 (3)	100 (4)	125 (5)
øA	70 (2.76)	70 (2.76)	70 (2.76)	83 (3.27)	96 (3.78)	114 (4.49)	126 (4.96)	152 (5.98)	180 (7.09)
øB	16.0 (3.82)	22.2 (0.87)	29.4 (1.16)	34.6 (1.36)	47.6 (1.87)	59.5 (2.34)	72.3 (2.85)	97.0 (3.82)	121.0 (4.76)
øC	20.0 (0.79)	30.0 (1.18)	36.0 (1.42)	42.0 (1.65)	54.0 (2.13)	70.0 (2.76)	85.0 (3.35)	104.0 (4.09)	129.0 (5.08)
ød	16.0 (0.63)	26.0 (1.02)	32.0 (1.26)	38.0 (1.50)	50.0 (1.97)	66.0 (2.60)	81.0 (3.19)	100.0 (3.94)	125.0 (4.92)
øE	27.5 (1.08)	43.5 (1.71)	43.5 (1.71)	43.5 (1.71)	56.5 (2.22)	83.5 (3.29)	97.0 (3.82)	110.0 (4.33)	146.0 (5.75)
øF	34.0 (1.34)	50.5 (1.99)	50.5 (1.99)	50.5 (1.99)	64.0 (2.52)	91.0 (3.58)	106.0 (4.17)	119.0 (4.69)	155.0 (6.10)
G	50 (1.97)	50 (1.97)	50 (1.97)	50 (1.97)	50 (1.97)	50 (1.97)	50 (1.97)	50 (1.97)	60 (2.36)
Parts No. (HDB)	F9811 JD	F9811 JE	F9811 JF	F9811 JG	F9811 JH	F9811 JJ	F9811 JK	F9811 JL	F9870 ZD

Unit: mm (approx. in.)

Process Connection Code	HKB: ISO 2852 / SMS 3016 Clamp								
Size Code	015	025	032	040	050	065	080	100	125
Size	15 (0.5)	25 (1)	32 (1.25)	40 (1.5)	50 (2)	65 (2.5)	80 (3)	100 (4)	125 (5)
øA	70 (2.76)	70 (2.76)	70 (2.76)	83 (3.27)	96 (3.78)	114 (4.49)	126 (4.96)	152 (5.98)	180 (7.09)
øB	16.0 (0.63)	22.2 (0.87)	29.4 (1.16)	34.6 (1.36)	47.6 (1.87)	59.5 (2.34)	72.3 (2.85)	97.0 (3.82)	121.0 (4.76)
øC	18.0 (0.71)	25.6 (1.01)	34.3 (1.35)	38.6 (1.52)	51.6 (2.03)	64.1 (2.52)	76.7 (3.02)	102.5 (4.04)	141.2 (5.56)
ød	15.2 (0.60)	22.6 (0.89)	31.3 (1.23)	35.6 (1.40)	48.6 (1.91)	60.3 (2.37)	72.9 (2.87)	97.6 (3.84)	135.7 (5.34)
øE	27.5 (1.08)	43.5 (1.71)	43.5 (1.71)	43.5 (1.71)	56.5 (2.22)	70.5 (2.78)	83.5 (3.29)	110.0 (4.33)	146.0 (5.75)
øF	34.0 (1.34)	50.5 (1.99)	50.5 (1.99)	50.5 (1.99)	64.0 (2.52)	77.5 (3.05)	91.0 (3.58)	119.0 (4.69)	155.0 (6.10)
G	50 (1.97)	50 (1.97)	50 (1.97)	50 (1.97)	50 (1.97)	50 (1.97)	50 (1.97)	50 (1.97)	60 (2.36)
Parts No. (HKB)	F9811 JN	F9811 JP	F9811 JQ	F9811 JR	F9811 JS	F9811 JT	F9811 JU	F9811 JV	F9870 ZE

Unit: mm (approx. in.)

Process Connection Code	HJA, HJB: ISO 2852 Clamp (for JIS G3447 Piping)								
Size Code	015	025	032	040	050	065	080	100	125
Size	15 (0.5)	25 (1)	32 (1.25)	40 (1.5)	50 (2)	65 (2.5)	80 (3)	100 (4)	125 (5)
øA	70 (2.76)	70 (2.76)	70 (2.76)	83 (3.27)	96 (3.78)	114 (4.49)	126 (4.96)	152 (5.98)	180 (7.09)
øB	16.0 (0.63)	22.2 (0.87)	29.4 (1.16)	34.6 (1.36)	47.6 (1.87)	59.5 (2.34)	72.3 (2.85)	97.0 (3.82)	121.0 (4.76)
øC	21.7 (0.85)	25.4 (1.00)	31.8 (1.25)	38.1 (1.50)	50.8 (2.00)	63.5 (2.50)	76.3 (3.00)	101.6 (4.00)	139.8 (5.50)
ød	17.5 (0.69)	23.0 (0.91)	29.4 (1.16)	35.7 (1.41)	47.8 (1.88)	59.5 (2.34)	72.3 (2.85)	97.6 (3.84)	133.8 (5.27)
øE	27.5 (1.08)	43.5 (1.71)	43.5 (1.71)	43.5 (1.71)	56.5 (2.22)	70.5 (2.78)	83.5 (3.29)	110.0 (4.33)	146.0 (5.75)
øF	34.0 (1.34)	50.5 (1.99)	50.5 (1.99)	50.5 (1.99)	64.0 (2.52)	77.5 (3.05)	91.0 (3.58)	119.0 (4.69)	155.0 (6.10)
G	50 (1.97)	50 (1.97)	50 (1.97)	50 (1.97)	50 (1.97)	50 (1.97)	50 (1.97)	50 (1.97)	60 (2.36)
Parts No. (HJA)	F9811 HA	F9811 HB	F9811 HC	F9811 HD	F9811 HE	F9811 HF	F9811 HG	F9811 HH	F9870 ZA
Parts No. (HJB)	F9811 HK	F9811 HL	F9811 HM	F9811 HN	F9811 HP	F9811 HQ	F9811 HR	F9811 HS	F9870 ZB

All Rights Reserved. Copyright © 2017, Yokogawa Electric Corporation

● Hygienic Use (Clamp, PFA Lining) with Connection Parts for HJA and HJB (Optional code W2)

Unit: mm (approx. in.)

Size 15 to 125 mm (0.5 to 5 in.)

AXG015
AXG025
AXG032
AXG040
AXG050 -H□□□□H□□A
AXG065
AXG080
AXG100
AXG125

Process Connection Code
Lining Code
Size Code

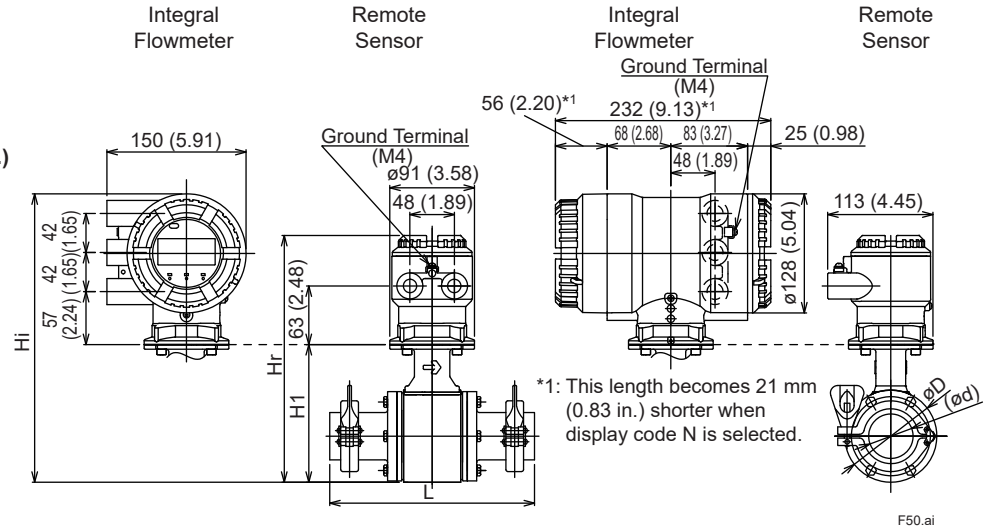

Unit: mm (approx. in.)

Model	Process Connection Code		HJA, HJB: ISO 2852 Clamp (for JIS G3447 Piping)								
	Size Code		015	025	032	040	050	065	080	100	125
	Size		15 (0.5)	25 (1)	32 (1.25)	40 (1.5)	50 (2)	65 (2.5)	80 (3)	100 (4)	125 (5)
	Lining Code		A	A	A	A	A	A	A	A	A
Remote Sensor Integral Flowmeter	Lay Length	L	204 (8.03)	211 (8.31)	204 (8.03)	211 (8.31)	221 (8.70)	241 (9.49)	261 (10.28)	291 (11.46)	374 (14.72)
	Outer Diameter	øD	73 (2.87)	73 (2.87)	73 (2.87)	86 (3.39)	99 (3.90)	117 (4.61)	129 (5.08)	155 (6.10)	183 (7.20)
	Inner Diameter	ød	17.5 (0.69)	23.0 (0.91)	29.4 (1.16)	35.7 (1.41)	47.8 (1.88)	59.5 (2.34)	72.3 (2.85)	97.6 (3.84)	133.8 (5.27)
	Height	H1	116 (4.57)	116 (4.57)	116 (4.57)	129 (5.08)	149 (5.87)	166 (6.54)	176 (6.93)	202 (7.95)	230 (9.06)
Remote Sensor	Maximum Height	Hr	233 (9.17)	233 (9.17)	233 (9.17)	246 (9.69)	266 (10.47)	283 (11.14)	293 (11.54)	319 (12.56)	347 (13.66)
	Approx. Weight, Unit: kg (lb) (*1)		3.0 (6.6)	2.7 (6.0)	2.9 (6.4)	3.2 (7.1)	3.9 (8.6)	5.1 (11.2)	5.9 (13.0)	8.1 (17.9)	12.3 (27.1)
Integral Flowmeter	Maximum Height	Hi	278 (10.94)	278 (10.94)	278 (10.94)	291 (11.46)	311 (12.24)	328 (12.91)	338 (13.31)	364 (14.33)	392 (15.43)
	Approx. Weight, Unit: kg (lb)		5.5 (12.1)	5.2 (11.5)	5.4 (11.9)	5.7 (12.6)	6.5 (14.3)	7.6 (16.8)	8.5 (18.7)	10.7 (23.6)	14.9 (32.9)

*1 When optional code DHC is selected, waterproof glands with union joints and cables are attached.
When the cable length is 30-meters, add 9.5 kg (20.9 lb) to the weight in the table.

Additional weight for FM (USA) Flameproof (FF2, FJ2, FT2)

Size	15	25	32	40	50	65	80	100	125
Lining Code	A	A	A	A	A	A	A	A	A
Hygienic Approx. Additional Weight, Unit: kg (lb)	0.1 (0.22)	0.1 (0.22)	0.1 (0.22)	0.2 (0.44)	0.3 (0.66)	0.5 (1.10)	0.8 (1.76)	1.3 (2.87)	1.8 (3.97)

All Rights Reserved. Copyright © 2017, Yokogawa Electric Corporation

● Hygienic Use (Union, PFA Lining)

Unit: mm (approx. in.)

Size 15 to 125 mm (0.5 to 5 in.)

AXG015
AXG025
AXG032
AXG040
AXG050 -H□□□□J□□A
AXG065
AXG080
AXG100
AXG125

Process Connection Code
Lining Code
Size Code

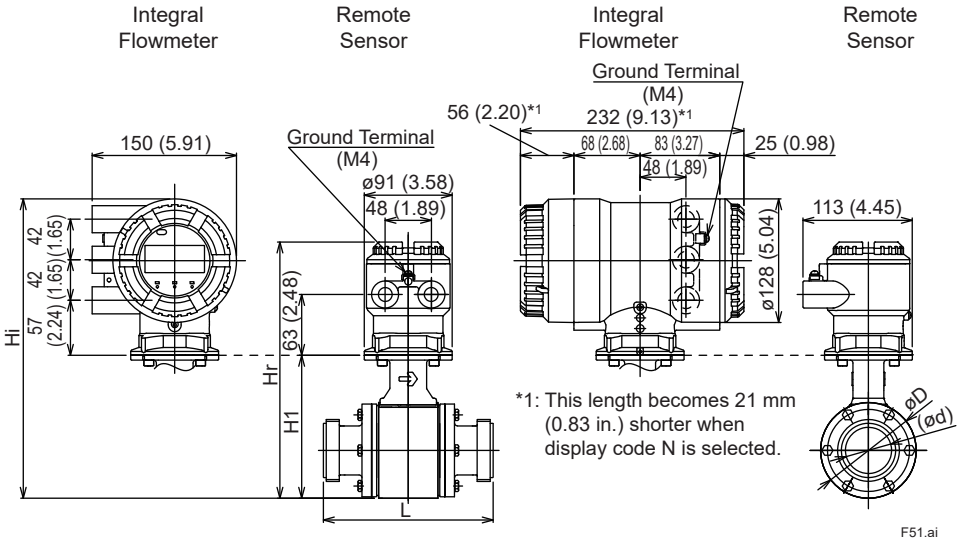

Unit: mm (approx. in.)

Model	Process Connection Code		JDB: DIN 11851 Union								
	Size Code		015	025	032	040	050	065	080	100	125
	Size		15 (0.5)	25 (1)	32 (1.25)	40 (1.5)	50 (2)	65 (2.5)	80 (3)	100 (4)	125 (5)
	Lining Code		A	A	A	A	A	A	A	A	A
Remote Sensor / Integral Flowmeter	Lay Length	L	166 (6.54)	166 (6.54)	166 (6.54)	166 (6.54)	176 (6.93)	196 (7.72)	236 (9.29)	266 (10.47)	326 (12.83)
	Outer Diameter	øD	73 (2.87)	73 (2.87)	73 (2.87)	86 (3.39)	99 (3.90)	117 (4.61)	129 (5.08)	155 (6.10)	183 (7.20)
	Height	H1	116 (4.57)	116 (4.57)	116 (4.57)	129 (5.08)	149 (5.87)	166 (6.54)	176 (6.93)	202 (7.95)	230 (9.06)
Remote Sensor	Maximum Height	Hr	233 (9.17)	233 (9.17)	233 (9.17)	246 (9.69)	266 (10.47)	283 (11.14)	293 (11.54)	319 (12.56)	347 (13.66)
	Approx. Weight, Unit: kg (lb) (*1)		3.0 (6.6)	3.0 (6.6)	3.1 (6.8)	3.4 (7.5)	4.3 (9.5)	5.5 (12.1)	6.5 (14.3)	9.2 (20.3)	14.3 (31.5)
Integral Flowmeter	Maximum Height	Hi	278 (10.94)	278 (10.94)	278 (10.94)	291 (11.46)	311 (12.24)	328 (12.91)	338 (13.31)	364 (14.33)	392 (15.43)
	Approx. Weight, Unit: kg (lb)		5.5 (12.1)	5.5 (12.1)	5.6 (12.3)	5.9 (13.0)	6.9 (15.2)	8.0 (17.6)	9.1 (20.1)	11.8 (26.0)	16.9 (37.3)

Unit: mm (approx. in.)

Model	Process Connection Code		JKB: ISO 2853 Union							
	Size Code		015	025	032	040	050	065	080	100
	Size		15 (0.5)	25 (1)	32 (1.25)	40 (1.5)	50 (2)	65 (2.5)	80 (3)	100 (4)
	Lining Code		A	A	A	A	A	A	A	A
Remote Sensor / Integral Flowmeter	Lay Length	L	166 (6.54)	166 (6.54)	166 (6.54)	166 (6.54)	176 (6.93)	196 (7.72)	216 (8.50)	246 (9.69)
	Outer Diameter	øD	73 (2.87)	73 (2.87)	73 (2.87)	86 (3.39)	99 (3.90)	117 (4.61)	129 (5.08)	155 (6.10)
	Height	H1	116 (4.57)	116 (4.57)	116 (4.57)	129 (5.08)	149 (5.87)	166 (6.54)	176 (6.93)	202 (7.95)
Remote Sensor	Maximum Height	Hr	233 (9.17)	233 (9.17)	233 (9.17)	246 (9.69)	266 (10.47)	283 (11.14)	293 (11.54)	319 (12.56)
	Approx. Weight, Unit: kg (lb) (*1)		3.0 (6.6)	3.0 (6.6)	3.1 (6.8)	3.4 (7.5)	4.3 (9.5)	5.5 (12.1)	6.5 (14.3)	9.2 (20.3)
Integral Flowmeter	Maximum Height	Hi	278 (10.94)	278 (10.94)	278 (10.94)	291 (11.46)	311 (12.24)	328 (12.91)	338 (13.31)	364 (14.33)
	Approx. Weight, Unit: kg (lb)		5.5 (12.1)	5.5 (12.1)	5.6 (12.3)	5.9 (13.0)	6.9 (15.2)	8.0 (17.6)	9.1 (20.1)	11.8 (26.0)

*1: When optional code DHC is selected, waterproof glands with union joints and cables are attached.
When the cable length is 30-meters, add 9.5 kg (20.9 lb) to the weight in the table.

Additional weight for FM (USA) Flameproof (FF2, FJ2, FT2) and FM (Canada) Flameproof (CF2, CJ2, CT2)

Size	15	25	32	40	50	65	80	100	125
Lining Code	A	A	A	A	A	A	A	A	A
Hygienic Approx. Additional Weight, Unit: kg (lb)	0.1 (0.22)	0.1 (0.22)	0.1 (0.22)	0.2 (0.44)	0.3 (0.66)	0.5 (1.10)	0.8 (1.76)	1.3 (2.87)	1.8 (3.97)

All Rights Reserved. Copyright © 2017, Yokogawa Electric Corporation

Unit: mm (approx. in.)

Model	Process Connection Code		JJA, JJB: ISO 2853 Union (for JIS G3447 Piping)						
	Size Code		025	032	040	050	065	080	100
	Size		25 (1)	32 (1.25)	40 (1.5)	50 (2)	65 (2.5)	80 (3)	100 (4)
	Lining Code		A	A	A	A	A	A	A
Remote Sensor Integral Flowmeter	Lay Length	L	166 (6.54)	166 (6.54)	166 (6.54)	176 (6.93)	196 (7.72)	216 (8.50)	246 (9.69)
	Outer Diameter	øD	73 (2.87)	73 (2.87)	86 (3.39)	99 (3.90)	117 (4.61)	129 (5.08)	155 (6.10)
	Height	H1	116 (4.57)	116 (4.57)	129 (5.08)	149 (5.87)	166 (6.54)	176 (6.93)	202 (7.95)
Remote Sensor	Maximum Height	Hr	233 (9.17)	233 (9.17)	246 (9.69)	266 (10.47)	283 (11.14)	293 (11.54)	319 (12.56)
	Approx. Weight, Unit: kg (lb) (*1)		3.0 (6.6)	3.1 (6.8)	3.4 (7.5)	4.3 (9.5)	5.5 (12.1)	6.5 (14.3)	9.2 (20.3)
Integral Flowmeter	Maximum Height	Hi	278 (10.94)	278 (10.94)	291 (11.46)	311 (12.24)	328 (12.91)	338 (13.31)	364 (14.33)
	Approx. Weight, Unit: kg (lb)		5.5 (12.1)	5.6 (12.3)	5.9 (13.0)	6.9 (15.2)	8.0 (17.6)	9.1 (20.1)	11.8 (26.0)

Unit: mm (approx. in.)

Model	Process Connection Code		JSB: SMS 1145 Union (Open groove packing type)						
	Size Code		025	032	040	050	065	080	100
	Size		25 (1)	32 (1.25)	40 (1.5)	50 (2)	65 (2.5)	80 (3)	100 (4)
	Lining Code		A	A	A	A	A	A	A
Remote Sensor Integral Flowmeter	Lay Length	L	166 (6.54)	166 (6.54)	166 (6.54)	176 (6.93)	196 (7.72)	216 (8.50)	276 (10.87)
	Outer Diameter	øD	73 (2.87)	73 (2.87)	86 (3.39)	99 (3.90)	117 (4.61)	129 (5.08)	155 (6.10)
	Height	H1	116 (4.57)	116 (4.57)	129 (5.08)	149 (5.87)	166 (6.54)	176 (6.93)	202 (7.95)
Remote Sensor	Maximum Height	Hr	233 (9.17)	233 (9.17)	246 (9.69)	266 (10.47)	283 (11.14)	293 (11.54)	319 (12.56)
	Approx. Weight, Unit: kg (lb) (*1)		3.0 (6.6)	3.1 (6.8)	3.4 (7.5)	4.3 (9.5)	5.5 (12.1)	6.5 (14.3)	9.2 (20.3)
Integral Flowmeter	Maximum Height	Hi	278 (10.94)	278 (10.94)	291 (11.46)	311 (12.24)	328 (12.91)	338 (13.31)	364 (14.33)
	Approx. Weight, Unit: kg (lb)		5.5 (12.1)	5.6 (12.3)	5.9 (13.0)	6.9 (15.2)	8.0 (17.6)	9.1 (20.1)	11.8 (26.0)

*1: When optional code DHC is selected, waterproof glands with union joints and cables are attached.
When the cable length is 30-meters, add 9.5 kg (20.9 lb) to the weight in the table.

All Rights Reserved. Copyright © 2017, Yokogawa Electric Corporation

○ Union Connection Adapter

Unit: mm (approx. in.)

Process Connection Code	JDB: DIN 11851 Union								
Size Code	015	025	032	040	050	065	080	100	125
Size	15 (0.5)	25 (1)	32 (1.25)	40 (1.5)	50 (2)	65 (2.5)	80 (3)	100 (4)	125 (5)
øA	70 (2.76)	70 (2.76)	70 (2.76)	83 (3.27)	96 (3.78)	114 (4.49)	126 (4.96)	152 (5.98)	180 (7.09)
øB	16.0 (0.63)	22.2 (0.87)	29.4 (1.16)	34.6 (1.36)	47.6 (1.87)	59.5 (2.34)	72.3 (2.85)	97.0 (3.82)	121.0 (4.76)
øC	20.0 (0.79)	30.0 (1.18)	36.0 (1.42)	42.0 (1.65)	54.0 (2.13)	70.0 (2.76)	85.0 (3.35)	104.0 (4.09)	129.0 (5.08)
ød	16.0 (0.63)	26.0 (1.02)	32.0 (1.26)	38.0 (1.50)	50.0 (1.97)	66.0 (2.60)	81.0 (3.19)	100.0 (3.94)	125.0 (4.92)
øE	18.0 (0.71)	30.0 (1.18)	36.0 (1.42)	42.0 (1.65)	54.0 (2.13)	71.0 (2.80)	85.0 (3.35)	104.0 (4.09)	130.0 (5.12)
øF	25.8 (1.02)	39.8 (1.57)	45.8 (1.80)	51.8 (2.04)	63.8 (2.51)	80.8 (3.18)	94.8 (3.73)	113.8 (4.48)	141.8 (5.58)
G	RD34 x 1/8"	RD52 x 1/6"	RD58 x 1/6"	RD65 x 1/6"	RD78 x 1/6"	RD95 x 1/6"	RD110 x 1/4"	RD130 x 1/4"	RD160 x 1/4"
H	50 (1.97)	50 (1.97)	50 (1.97)	50 (1.97)	50 (1.97)	50 (1.97)	60 (2.36)	60 (2.36)	65 (2.56)
Parts No. (JDB)	F9811 KR	F9811 KS	F9811 KT	F9811 KU	F9811 KV	F9811 KW	F9811 KX	F9811 KY	F9870 ZH

Unit: mm (approx. in.)

Process Connection Code	JKB: ISO 2853 Union							
Size Code	015	025	032	040	050	065	080	100
Size	15 (0.5)	25 (1)	32 (1.25)	40 (1.5)	50 (2)	65 (2.5)	80 (3)	100 (4)
øA	70 (2.76)	70 (2.76)	70 (2.76)	83 (3.27)	96 (3.78)	114 (4.49)	126 (4.96)	152 (5.98)
øB	16.0 (0.63)	22.2 (0.87)	29.4 (1.16)	34.6 (1.36)	47.6 (1.87)	59.5 (2.34)	72.3 (2.85)	97.0 (3.82)
øC	18.0 (0.71)	25.6 (1.01)	34.3 (1.35)	38.6 (1.52)	51.6 (2.03)	64.1 (2.52)	76.7 (3.02)	102.5 (4.04)
ød	15.2 (0.60)	22.6 (0.89)	31.3 (1.23)	35.6 (1.40)	48.6 (1.91)	60.3 (2.37)	72.9 (2.87)	97.6 (3.84)
øE	21.2 (0.83)	29.2 (1.15)	38.2 (1.50)	42.7 (1.68)	56.2 (2.21)	69.9 (2.75)	82.6 (3.25)	108.7 (4.28)
F	13.5 (0.53)	13.5 (0.53)	13.5 (0.53)	13.5 (0.53)	13.5 (0.53)	13.5 (0.53)	13.5 (0.53)	13.5 (0.53)
G	3 (0.12)	3 (0.12)	3 (0.12)	3 (0.12)	3 (0.12)	3 (0.12)	3 (0.12)	3 (0.12)
H	50 (1.97)	50 (1.97)	50 (1.97)	50 (1.97)	50 (1.97)	50 (1.97)	50 (1.97)	50 (1.97)
Parts No. (JKB)	F9811 LA	F9811 LB	F9811 LC	F9811 LD	F9811 LE	F9811 LF	F9811 LG	F9811 LH

Unit: mm (approx. in.)

Process Connection Code	JJA, JJB: ISO 2853 Union (for JIS G3447 Piping)						
Size Code	025	032	040	050	065	080	100
Size	25 (1)	32 (1.25)	40 (1.5)	50 (2)	65 (2.5)	80 (3)	100 (4)
øA	70 (2.76)	70 (2.76)	83 (3.27)	96 (3.78)	114 (4.49)	126 (4.96)	152 (5.98)
øB	22.2 (0.87)	29.4 (1.16)	34.6 (1.36)	47.6 (1.87)	59.5 (2.34)	72.3 (2.85)	97.0 (3.82)
øC	25.6 (1.01)	31.8 (1.25)	38.0 (1.50)	51.0 (2.01)	63.5 (2.50)	76.3 (3.00)	101.6 (4.00)
ød	23.0 (0.91)	29.4 (1.16)	35.6 (1.40)	47.8 (1.88)	59.5 (2.34)	72.3 (2.85)	97.6 (3.84)
øE	29.2 (1.15)	35.7 (1.41)	42.7 (1.68)	56.2 (2.21)	69.9 (2.75)	82.6 (3.25)	108.7 (4.28)
F	13.5 (0.53)	10.0 (0.39)	13.5 (0.53)	13.5 (0.53)	13.5 (0.53)	13.5 (0.53)	18.0 (0.71)
G	3 (0.12)	2.5 (0.10)	3 (0.12)	3 (0.12)	3 (0.12)	3 (0.12)	3 (0.12)
H	50 (1.97)	50 (1.97)	50 (1.97)	50 (1.97)	50 (1.97)	50 (1.97)	50 (1.97)
Parts No. (JJA)	F9811 JY	F9811 JZ	F9811 KA	F9811 KB	F9811 KC	F9811 KD	F9811 KE
Parts No. (JJB)	F9811 KH	F9811 KJ	F9811 KK	F9811 KL	F9811 KM	F9811 KN	F9811 KP

Unit: mm (approx. in.)

Process Connection Code	JSB: SMS 1145 Union (Open groove packing type)						
Size Code	025	032	040	050	065	080	100
Size	25 (1)	32 (1.25)	40 (1.5)	50 (2)	65 (2.5)	80 (3)	100 (4)
øA	70 (2.76)	70 (2.76)	83 (3.27)	96 (3.78)	114 (4.49)	126 (4.96)	152 (5.98)
øB	22.2 (0.87)	29.4 (1.16)	34.6 (1.36)	47.6 (1.87)	59.5 (2.34)	72.3 (2.85)	97.0 (3.82)
øC	25.4 (1.00)	32.0 (1.26)	38.1 (1.50)	51.0 (2.01)	63.5 (2.50)	76.2 (3.00)	102.5 (4.04)
ød	22.5 (0.89)	29.6 (1.17)	35.5 (1.40)	48.5 (1.91)	60.5 (2.38)	72.9 (2.87)	97.6 (3.84)
øE	32.0 (1.26)	40.0 (1.57)	48.0 (1.89)	61.0 (2.40)	73.5 (2.89)	86.0 (3.39)	120.0 (4.72)
F	11 (0.43)	13 (0.51)	15 (0.59)	15 (0.59)	19 (0.75)	19 (0.75)	30 (1.18)
G	RD40 x 1/6"	RD48 x 1/6"	RD60 x 1/6"	RD70 x 1/6"	RD85 x 1/6"	RD98 x 1/6"	RD132 x 1/6"
H	50 (1.97)	50 (1.97)	50 (1.97)	50 (1.97)	50 (1.97)	50 (1.97)	65 (2.56)
Parts No. (JSB)	F9811 LK	F9811 LL	F9811 LM	F9811 LN	F9811 LP	F9811 LQ	F9811 LR

JDB

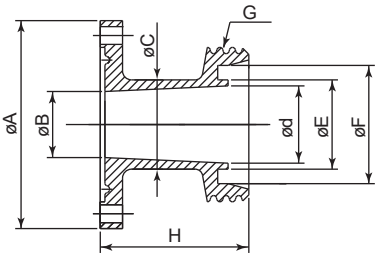

JKB, JJA, JJB

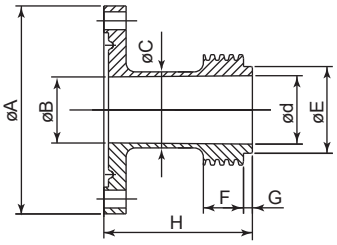

JSB

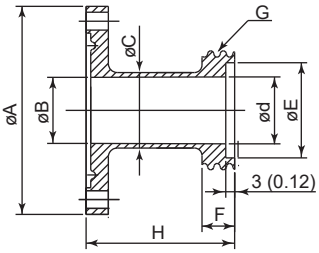

F52.ai

Union Connection Adapter

All Rights Reserved. Copyright © 2017, Yokogawa Electric Corporation

● Hygienic Use (Butt Weld Joint, PFA Lining)

Unit: mm (approx. in.)

Size 15 to 125 mm (0.5 to 5 in.)

AXG015
AXG025
AXG032
AXG040
AXG050 -H□□□□K□□A
AXG065
AXG080
AXG100
AXG125

Process Connection Code
Lining Code
Size Code

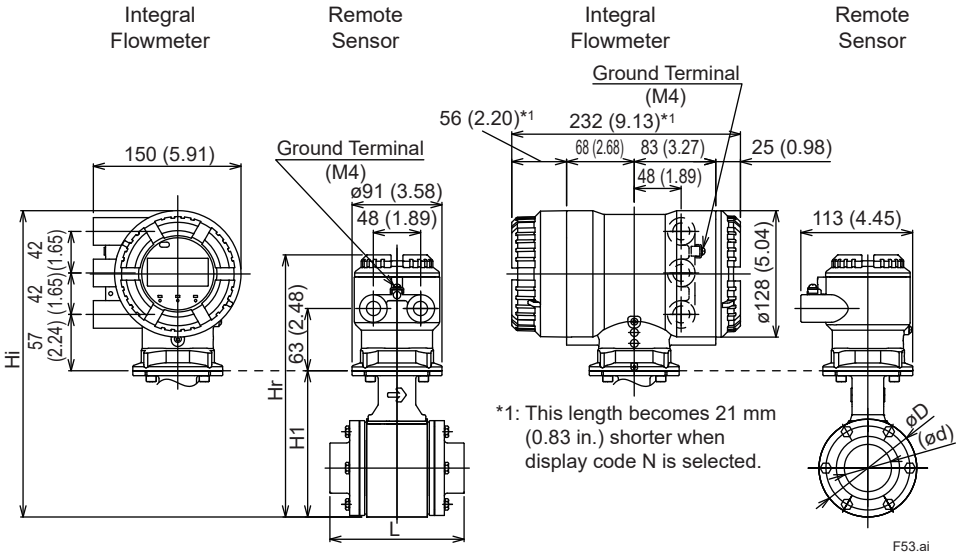

Unit: mm (approx. in.)

Model	Process Connection Code		KDB: DIN 11850 Piping Butt Weld Joint KKB: ISO 2037 Piping Butt Weld Joint KJA, KJB: JIS G3447 Piping Butt Weld Joint								
	Size Code		015	025	032	040	050	065	080	100	125
	Size		15 (0.5)	25 (1)	32 (1.25)	40 (1.5)	50 (2)	65 (2.5)	80 (3)	100 (4)	125 (5)
	Lining Code		A	A	A	A	A	A	A	A	A
Remote Sensor Integral Flowmeter	Lay Length	L	126 (4.96)	126 (4.96)	126 (4.96)	126 (4.96)	136 (5.35)	156 (6.14)	176 (6.93)	206 (8.11)	276 (10.87)
	Outer Diameter	øD	73 (2.87)	73 (2.87)	73 (2.87)	86 (3.39)	99 (3.90)	117 (4.61)	129 (5.08)	155 (6.10)	183 (7.20)
	Height	H1	116 (4.57)	116 (4.57)	116 (4.57)	129 (5.08)	149 (5.87)	166 (6.54)	176 (6.93)	202 (7.95)	230 (9.06)
Remote Sensor	Maximum Height	Hr	233 (9.17)	233 (9.17)	233 (9.17)	246 (9.69)	266 (10.47)	283 (11.14)	293 (11.54)	319 (12.56)	347 (13.66)
	Approx. Weight, Unit: kg (lb) (*1)		3.0 (6.6)	2.7 (6.0)	2.9 (6.4)	3.2 (7.1)	3.9 (8.6)	5.1 (11.2)	5.9 (13.0)	8.1 (17.9)	12.3 (27.1)
Integral Flowmeter	Maximum Height	Hi	278 (10.94)	278 (10.94)	278 (10.94)	291 (11.46)	311 (12.24)	328 (12.91)	338 (13.31)	364 (14.33)	392 (15.43)
	Approx. Weight, Unit: kg (lb)		5.5 (12.1)	5.2 (11.5)	5.4 (11.9)	5.7 (12.6)	6.5 (14.3)	7.6 (16.8)	8.5 (18.7)	10.7 (23.6)	14.9 (32.9)

*1: When optional code DHC is selected, waterproof glands with union joints and cables are attached.
When the cable length is 30-meters, add 9.5 kg (20.9 lb) to the weight in the table.

Additional weight for FM (USA) Flameproof (FF2, FJ2, FT2) and FM (Canada) Flameproof (CF2, CJ2, CT2)

Size	15	25	32	40	50	65	80	100	125
Lining Code	A	A	A	A	A	A	A	A	A
Hygienic Approx. Additional Weight, Unit: kg (lb)	0.1 (0.22)	0.1 (0.22)	0.1 (0.22)	0.2 (0.44)	0.3 (0.66)	0.5 (1.10)	0.8 (1.76)	1.3 (2.87)	1.8 (3.97)

All Rights Reserved. Copyright © 2017, Yokogawa Electric Corporation

○ Butt Weld Joint Adapter

Unit: mm (approx. in.)

Process Connection Code	KDB: DIN 11850 Piping Butt Weld Joint								
Size Code	015	025	032	040	050	065	080	100	125
Size	15 (0.5)	25 (1)	32 (1.25)	40 (1.5)	50 (2)	65 (2.5)	80 (3)	100 (4)	125 (5)
øA	70 (2.76)	70 (2.76)	70 (2.76)	83 (3.27)	96 (3.78)	114 (4.49)	126 (4.96)	152 (5.98)	180 (7.09)
øB	16.0 (0.63)	22.2 (0.87)	29.4 (1.16)	34.6 (1.36)	47.6 (1.87)	59.5 (2.34)	72.3 (2.85)	97.0 (3.82)	121.0 (4.76)
øC	20.0 (0.79)	30.0 (1.18)	36.0 (1.42)	42.0 (1.65)	54.0 (2.13)	70.0 (2.76)	85.0 (3.35)	104.0 (4.09)	129.0 (5.08)
ød	16.0 (0.63)	26.0 (1.02)	32.0 (1.26)	38.0 (1.50)	50.0 (1.97)	66.0 (2.60)	81.0 (3.19)	100.0 (3.94)	125.0 (4.92)
E	30 (1.18)	30 (1.18)	30 (1.18)	30 (1.18)	30 (1.18)	30 (1.18)	30 (1.18)	30 (1.18)	40 (1.57)
Parts No. (KDB)	F9811 ND	F9811 NE	F9811 NF	F9811 NG	F9811 NH	F9811 NJ	F9811 NK	F9811 NL	F9870 ZP

KDB, KKB, KJA, KJB

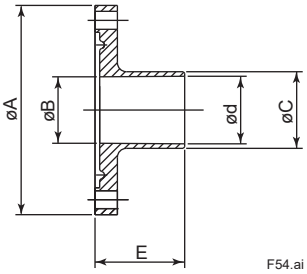

Butt Weld Joint Adapter

Unit: mm (approx. in.)

Process Connection Code	KKB: ISO 2037 Piping Butt Weld Joint								
Size Code	015	025	032	040	050	065	080	100	125
Size	15 (0.5)	25 (1)	32 (1.25)	40 (1.5)	50 (2)	65 (2.5)	80 (3)	100 (4)	125 (5)
øA	70 (2.76)	70 (2.76)	70 (2.76)	83 (3.27)	96 (3.78)	114 (4.49)	126 (4.96)	152 (5.98)	180 (7.09)
øB	16.0 (0.63)	22.2 (0.87)	29.4 (1.16)	34.6 (1.36)	47.6 (1.87)	59.5 (2.34)	72.3 (2.85)	97.0 (3.82)	121.0 (4.76)
øC	18.0 (0.71)	25.6 (1.01)	34.3 (1.35)	38.6 (1.52)	51.6 (2.03)	64.1 (2.52)	76.7 (3.02)	102.5 (4.04)	141.2 (5.56)
ød	15.2 (0.60)	22.6 (0.89)	31.3 (1.23)	35.6 (1.40)	48.6 (1.91)	60.3 (2.37)	72.9 (2.87)	97.6 (3.84)	135.7 (5.34)
E	30 (1.18)	30 (1.18)	30 (1.18)	30 (1.18)	30 (1.18)	30 (1.18)	30 (1.18)	30 (1.18)	40 (1.57)
Parts No. (KKB)	F9811 NN	F9811 NP	F9811 NQ	F9811 NR	F9811 NS	F9811 NT	F9811 NU	F9811 NV	F9870 ZQ

Unit: mm (approx. in.)

Process Connection Code	KJA, KJB: JIS G3447 Piping Butt Weld Joint								
Size Code	015	025	032	040	050	065	080	100	125
Size	15 (0.5)	25 (1)	32 (1.25)	40 (1.5)	50 (2)	65 (2.5)	80 (3)	100 (4)	125 (5)
øA	70 (2.76)	70 (2.76)	70 (2.76)	83 (3.27)	96 (3.78)	114 (4.49)	126 (4.96)	152 (5.98)	180 (7.09)
øB	16.0 (0.63)	22.2 (0.87)	29.4 (1.16)	34.6 (1.36)	47.6 (1.87)	59.5 (2.34)	72.3 (2.85)	97.0 (3.82)	121.0 (4.76)
øC	21.7 (0.85)	25.4 (1.00)	31.8 (1.25)	38.1 (1.50)	50.8 (2.00)	63.5 (2.50)	76.3 (3.00)	101.6 (4.00)	139.8 (5.50)
ød	17.5 (0.69)	23.0 (0.91)	29.4 (1.16)	35.7 (1.41)	47.8 (1.88)	59.5 (2.34)	72.3 (2.85)	97.6 (3.84)	133.8 (5.27)
E	30 (1.18)	30 (1.18)	30 (1.18)	30 (1.18)	30 (1.18)	30 (1.18)	30 (1.18)	30 (1.18)	40 (1.57)
Parts No. (KJA)	F9811 MA	F9811 MB	F9811 MC	F9811 MD	F9811 ME	F9811 MF	F9811 MG	F9811 MH	F9870 ZL
Parts No. (KJB)	F9811 MK	F9811 ML	F9811 MM	F9811 MN	F9811 MP	F9811 MQ	F9811 MR	F9811 MS	F9870 ZM

All Rights Reserved. Copyright © 2017, Yokogawa Electric Corporation

● **Replacement Model Wafer (PFA Lining)**

Unit: mm (approx. in.)

Size 25 to 100 mm (1 to 4 in.)

AXG025
AXG040
AXG050 -□□□□□**A**□□**A**…/RW/GAN
AXG080
AXG100

Size Code

Process Connection Code

Lining Code

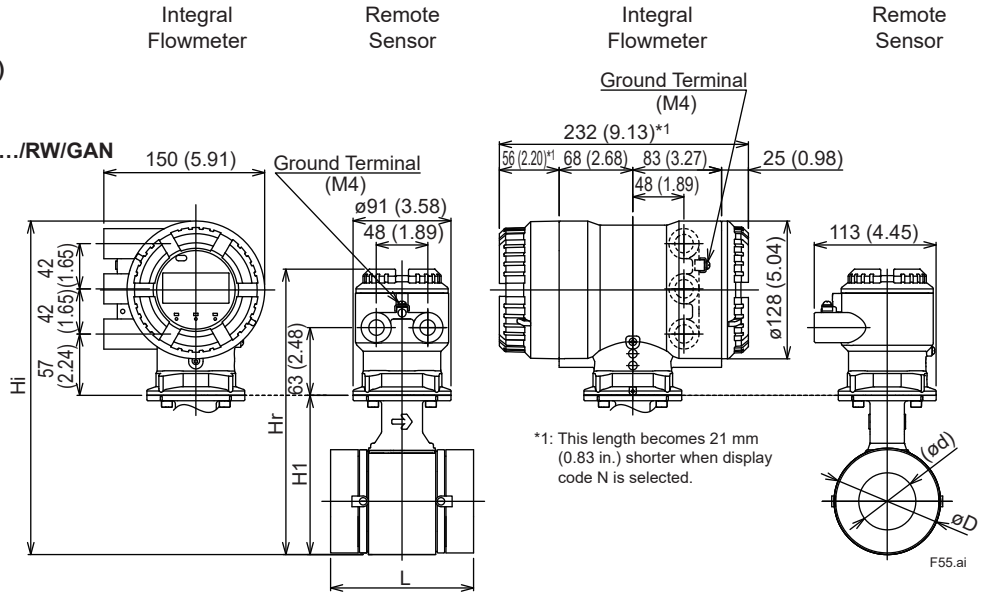

Size 150 to 200 mm (6 to 8 in.)

AXG150
AXG200 -□□□□□**A**□□**A**…/RW/GAN

Size Code

Process Connection Code

Lining Code

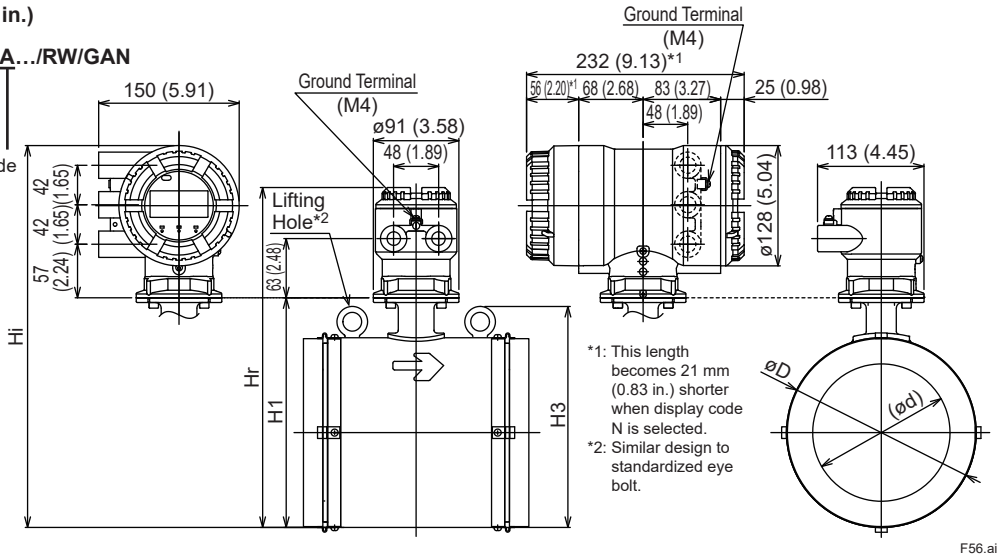

All Rights Reserved. Copyright © 2017, Yokogawa Electric Corporation

Unit: mm (approx. in.)

Model	Process Connection Code		AA1, AA2, AJ1, AJ2					AA1, AJ1	AA2, AJ2	AA1, AJ1	AA2, AJ2
			-	-	-	AG1		AG1	-	AG1	-
	Size Code		025	040	050	080	100	150	150	200	200
	Size		25 (1)	40 (1.5)	50 (2)	80 (3)	100 (4)	150 (6)	150 (6)	200 (8)	200 (8)
	Lining Code		A	A	A	A	A	A	A	A	A
Remote Sensor Integral Flowmeter	Lay Length (*1) (Including The Thickness Of The Grounding Ring)	L	93 (3.66)	106 (4.17)	120 (4.72)	160 (6.30)	180 (7.09)	230 (9.06)	230 (9.06)	300 (11.81)	300 (11.81)
	Outer Diameter	øD	68 (2.66)	86 (3.39)	99 (3.90)	129 (5.08)	155 (6.10)	202 (7.94)	202 (7.94)	252 (9.91)	252 (9.91)
	Grounding Ring Inner Diameter	ød	27 (1.06)	40 (1.57)	52 (2.05)	81 (3.19)	102 (4.02)	147.3 (5.80)	147.3 (5.80)	198.9 (7.83)	198.9 (7.83)
	Height	H1	110 (4.33)	129 (5.08)	148 (5.83)	175 (6.89)	201 (7.91)	244 (9.62)	262 (10.31)	294 (11.59)	312 (12.28)
	Height	H3	-	-	-	-	-	235 (9.26)	235 (9.26)	285 (11.22)	285 (11.22)
Remote Sensor	Maximum Height	Hr	227 (8.94)	246 (9.69)	265 (10.43)	292 (11.50)	318 (12.52)	362 (14.24)	380 (14.96)	412 (16.21)	430 (16.93)
	Approx. Weight, Unit: kg (lb) (*2)		2.9 (6.39)	3.8 (8.38)	4.9 (10.80)	7.0 (15.43)	8.8 (19.40)	19 (41.89)	19 (41.89)	30 (66.14)	30 (66.14)
Integral Flowmeter	Maximum Height	Hi	272 (10.71)	291 (11.46)	310 (12.20)	337 (13.27)	363 (14.29)	406 (16.00)	424 (16.69)	456 (17.97)	474 (18.66)
	Approx. Weight, Unit: kg (lb)		5.5 (12.13)	6.3 (13.89)	7.4 (16.31)	9.6 (21.16)	11.3 (24.91)	21 (46.30)	21 (46.30)	33 (72.75)	33 (72.75)
Gaskets (BSC, BSF) (*1)			+6 (+0.24)	+6 (+0.24)	+6 (+0.24)	+6 (+0.24)	+6 (+0.24)	+6 (+0.24)	+6 (+0.24)	+6 (+0.24)	+6 (+0.24)
Gaskets (GA, GC, GD) (*1)			+4 (0.16)	+4 (0.16)	+4 (0.16)	+4 (0.16)	+4 (0.16)	+6 (0.24)	+6 (0.24)	+6 (0.24)	+6 (0.24)
Gaskets (GA, GC, GD) and Gaskets (BSC, BSF) (*1)			+10 (0.39)	+10 (0.39)	+10 (0.39)	+10 (0.39)	+10 (0.39)	+12 (0.47)	+12 (0.47)	+12 (0.47)	+12 (0.47)

*1: Add the value above (which is the total of both ends) to the lay length "L" when selecting optional gaskets.
*2: When submersible use or optional code DHC is selected, waterproof glands with union joints and cables are attached.
When the cable length is 30-meters, add 9.5 kg (20.9 lb) to the weight in the table.

Additional weight for FM (USA) Flameproof (FF2, FJ2, FT2)

Size	25	40	50	80	100	150	200
Lining Code	A	A	A	A	A	A	A
Wafer Approx. Additional Weight, Unit: kg (lb)	0.1 (0.22)	0.2 (0.44)	0.3 (0.66)	0.8 (1.76)	1.3 (2.87)	2 (4.41)	4 (8.82)

All Rights Reserved. Copyright © 2017, Yokogawa Electric Corporation

(2) AXG4A Remote Transmitter

Unit: mm (approx. in.)

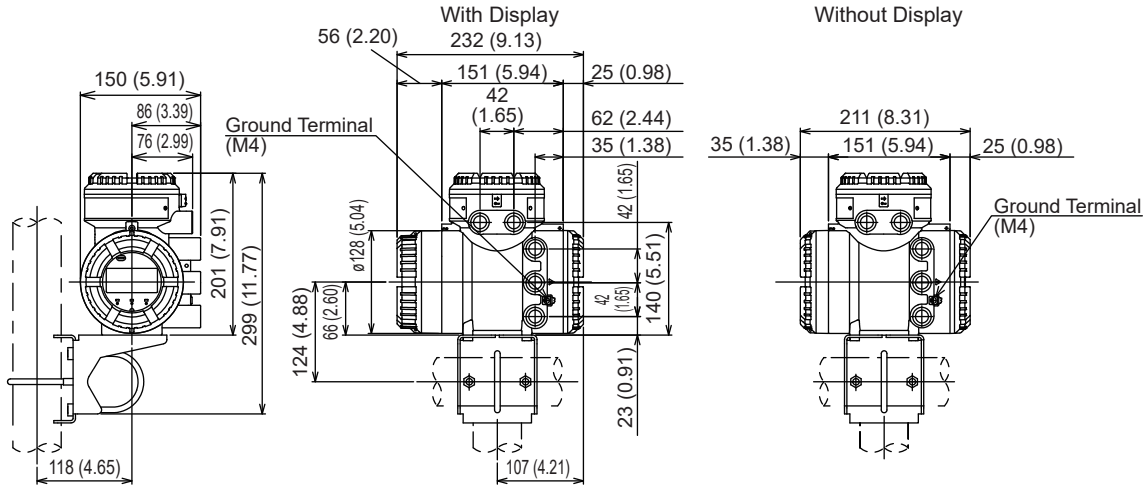

Weight: 4.4 kg (9.7 lb)

Weight: 4.1 kg (9.0 lb)

(3) AX01C Magnetic Flowmeter Signal Cable

Cable Finish: Finished

Unit: mm (approx. in.)

AX01C-■□□□
■=B, C, D

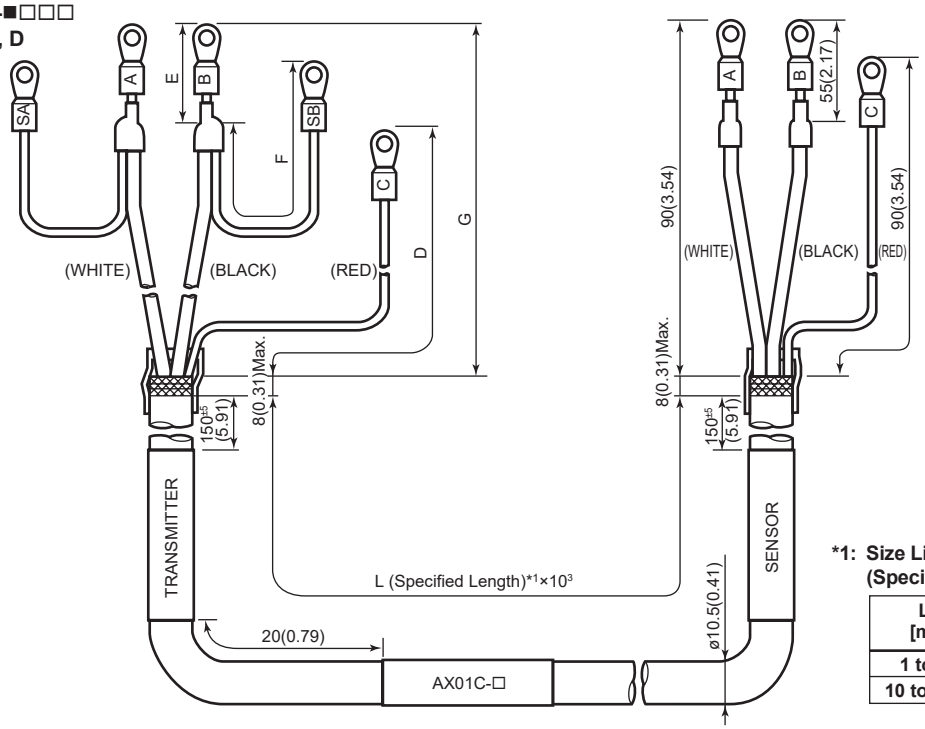

***1: Size Limit Deviation for L (Specified Length)**

L [m]	Limit Deviation	
	Lower	Upper
1 to 9	0	+2 %
10 to 200	0	+1 %

Unit: mm (approx. in.)

Model and Suffix Code	Length				Description
	D	E	F	G	
AX01C-B□□□	70 (2.8) $^{+5}_{0}$	25 (1.0) $^{+5}_{0}$	50 (2.0) $^{+5}_{0}$	60 (2.4) $^{+5}_{0}$	For AXG1A
AX01C-C□□□	60 (2.4) $^{+5}_{0}$	25 (1.0) $^{+5}_{0}$	70 (2.8) $^{+5}_{0}$	50 (2.0) $^{+5}_{0}$	For AXG4A
AX01C-D□□□	70 (2.8) $^{+5}_{0}$	25 (1.0) $^{+5}_{0}$	50 (2.0) $^{+5}_{0}$	60 (2.4) $^{+5}_{0}$	For AXFA11

Cable Finish: Unfinished

AX01C-■□□□
■=A

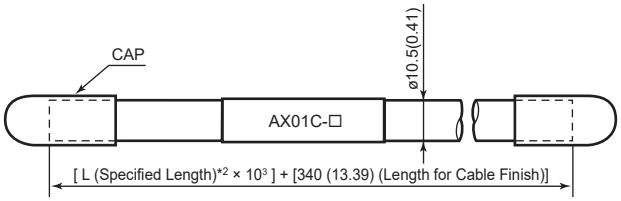

***2: Size Limit Deviation for L (Specified Length)**

L [m]	Limit Deviation	
	Lower	Upper
1 to 9	0	+4 %
10 to 100	0	+2 %
101 to 200	0	+1 %

F57.ai

All Rights Reserved. Copyright © 2017, Yokogawa Electric Corporation

(4) Flameproof Packing Adapter (Optional code V5#: #=1 to 5)

Unit: mm ([ ]: approx.inch)

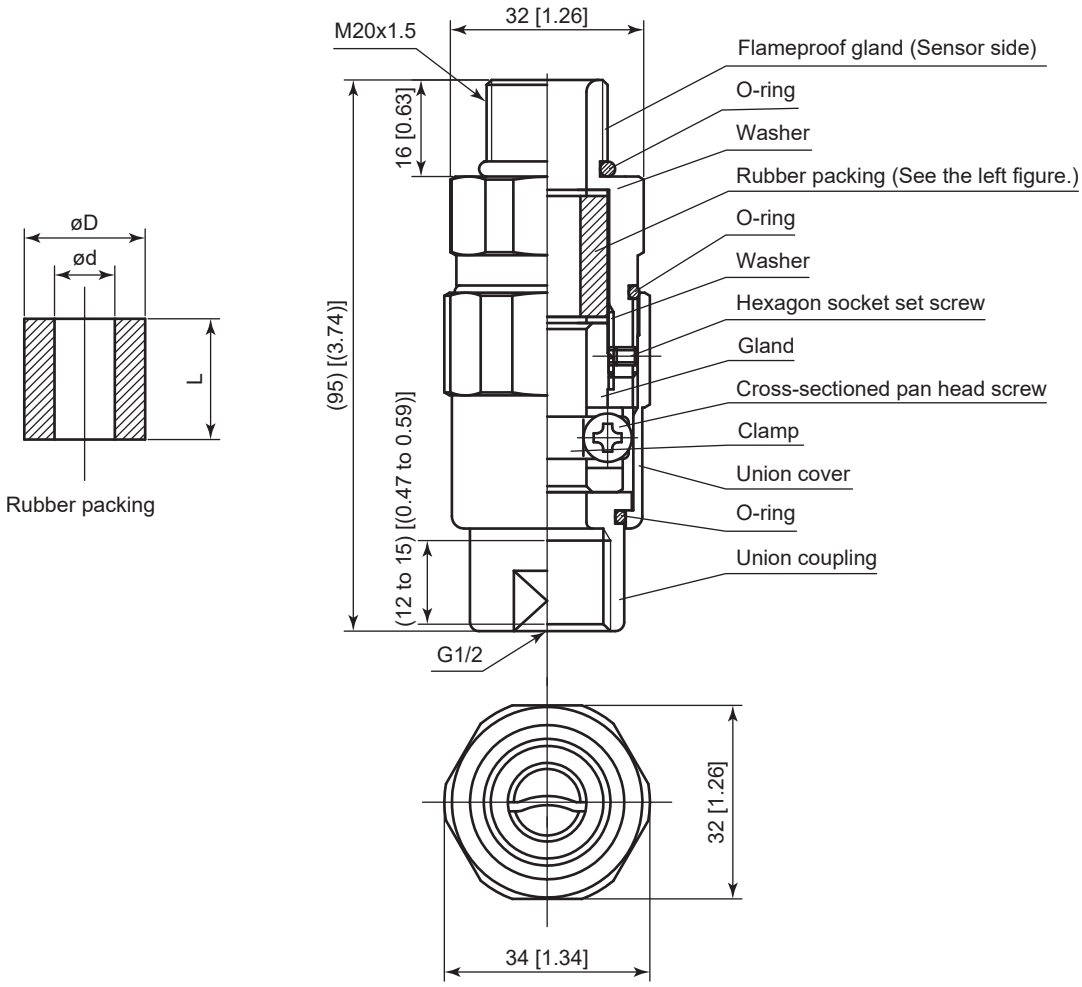

Unit: mm ([ ]: approx.inch)

Dimensions of rubber packing (before compression)			Identification mark of rubber packing	Cable outer diameter	
L	øD	ød		Min.	Max.
20 [0.79]	ø20 [0.79]	ø10 [0.39]	ø10 [0.39]	ø8.0 [0.31]	ø10.0 [0.39]
20 [0.79]	ø20 [0.79]	ø12 [0.47]	ø12 [0.47]	ø10.0 [0.39]	ø12.0 [0.47]

F58.ai

All Rights Reserved. Copyright © 2017, Yokogawa Electric Corporation

(5) Mounting bolts

● **Optional code BSC, BSF**

○ **PFA Lining, JIS 10K Wafer** Unit: mm (approx.inch)

Size	Optional code (Grounding Devices)					
	Without Grounding ring, /GRL, /GRH, /GRV, /GRN, /GRJ, /GRW		/GRP, /GRT		/GAN	
	Nominal Bolt Diameter	Length of Through-bolt	Nominal Bolt Diameter	Length of Through-bolt	Nominal Bolt Diameter	Length of Through-bolt
2, 5, 10, 15 (0.1, 0.2, 0.4, 0.5)	M12	160 (6.30)	M12	180 (7.09)	–	–
25 (1)	M16	155 (6.10)	M16	200 (7.87)	M16	200 (7.87)
32 (1.25)	M16	155 (6.10)	M16	190 (7.48)	–	–
40 (1.5)	M16	175 (6.89)	M16	175 (6.89)	M16	200 (7.87)
50 (2)	M16	185 (7.28)	M16	220 (8.66)	M16	220 (8.66)
65 (2.5)	M16	190 (7.48)	M16	220 (8.66)	–	–
80 (3)	M16	220 (8.66)	M16	245 (9.65)	M16	255 (10.04)
100 (4)	M16	255 (10.04)	M16	275 (10.83)	M16	280 (11.02)
125 (5)	M20	316 (12.44)	M20	340 (13.39)	–	–
150 (6)	M20	340 (13.39)	M20	340 (13.39)	M20	340 (13.39)
200 (8)	M20	410 (16.14)	M20	410 (16.14)	M20	410 (16.14)

○ **PFA Lining, JIS 20K Wafer** Unit: mm (approx.inch)

Size	Optional code (Grounding Devices)					
	Without Grounding ring, /GRL, /GRH, /GRV, /GRN, /GRJ, /GRW		/GRP, /GRT		/GAN	
	Nominal Bolt Diameter	Length of Through-bolt	Nominal Bolt Diameter	Length of Through-bolt	Nominal Bolt Diameter	Length of Through-bolt
2, 5, 10, 15 (0.1, 0.2, 0.4, 0.5)	M12	160 (6.30)	M12	180 (7.09)	–	–
25 (1)	M16	155 (6.10)	M16	180 (7.09)	M16	180 (7.09)
32 (1.25)	M16	175 (6.89)	M16	190 (7.48)	–	–
40 (1.5)	M16	175 (6.89)	M16	190 (7.48)	M16	200 (7.87)
50 (2)	M16	185 (7.28)	M16	220 (8.66)	M16	220 (8.66)
65 (2.5)	M16	220 (8.66)	M16	220 (8.66)	–	–
80 (3)	M20	260 (10.24)	M20	260 (10.24)	M20	295 (11.61)
100 (4)	M20	271 (10.67)	M20	295 (11.61)	M20	295 (11.61)
125 (5)	M22	330 (12.99)	M22	360 (14.17)	–	–
150 (6)	M22	360 (14.17)	M22	360 (14.17)	M22	360 (14.17)
200 (8)	M22	435 (17.13)	M22	435 (17.13)	M22	435 (17.13)

○ **PFA Lining, ASME Class 150 Wafer** Unit: mm (approx.inch)

Size	Optional code (Grounding Devices)					
	Without Grounding ring, /GRL, /GRH, /GRV, /GRN, /GRJ, /GRW		/GRP, /GRT		/GAN	
	Nominal Bolt Diameter	Length of Through-bolt	Nominal Bolt Diameter	Length of Through-bolt	Nominal Bolt Diameter	Length of Through-bolt
2, 5, 10, 15 (0.1, 0.2, 0.4, 0.5)	1/2UNC	155 (6.10)	1/2UNC	190 (7.48)	–	–
25 (1)	1/2UNC	155 (6.10)	1/2UNC	165 (6.50)	1/2UNC	190 (7.48)
32 (1.25)	1/2UNC	160 (6.30)	1/2UNC	180 (7.09)	–	–
40 (1.5)	1/2UNC	160 (6.30)	1/2UNC	180 (7.09)	1/2UNC	190 (7.48)
50 (2)	5/8UNC	200 (7.87)	5/8UNC	200 (7.87)	5/8UNC	240 (9.45)
65 (2.5)	5/8UNC	230 (9.06)	5/8UNC	230 (9.06)	–	–
80 (3)	5/8UNC	230 (9.06)	5/8UNC	250 (9.84)	5/8UNC	265 (10.43)
100 (4)	5/8UNC	265 (10.43)	5/8UNC	280 (11.02)	5/8UNC	290 (11.42)
125 (5)	3/4UNC	345 (13.58)	3/4UNC	345 (13.58)	–	–
150 (6)	3/4UNC	345 (13.58)	3/4UNC	345 (13.58)	3/4UNC	345 (13.58)
200 (8)	3/4UNC	420 (16.54)	3/4UNC	420 (16.54)	3/4UNC	420 (16.54)

All Rights Reserved. Copyright © 2017, Yokogawa Electric Corporation

○ **Ceramics Tube, JIS 10K Wafer** Unit: mm (approx.inch)

Size	Optional code (Grounding Devices)			
	Without Grounding ring, /GRL, /GRH, /GRV, /GRN, /GRJ, /GRW		/GRP, /GRT	
	Nominal Bolt Diameter	Length of Through-bolt	Nominal Bolt Diameter	Length of Through-bolt
15 (0.5)	M12	160 (6.30)	M12	180 (7.09)
25 (1)	M16	200 (7.87)	M16	200 (7.87)
40 (1.5)	M16	200 (7.87)	M16	220 (8.66)
50 (2)	M16	220 (8.66)	M16	255 (10.04)
80 (3)	M16	255 (10.04)	M16	280 (11.02)
100 (4)	M16	280 (11.02)	M16	300 (11.81)
150 (6)	M20	340 (13.39)	M20	370 (14.57)
200 (8)	M20	410 (16.14)	M20	440 (17.32)

○ **Ceramics Tube, JIS 20K Wafer** Unit: mm (approx.inch)

Size	Optional code (Grounding Devices)			
	Without Grounding ring, /GRL, /GRH, /GRV, /GRN, /GRJ, /GRW		/GRP, /GRT	
	Nominal Bolt Diameter	Length of Through-bolt	Nominal Bolt Diameter	Length of Through-bolt
15 (0.5)	M12	160 (6.30)	M12	180 (7.09)
25 (1)	M16	180 (7.09)	M16	200 (7.87)
40 (1.5)	M16	200 (7.87)	M16	220 (8.66)
50 (2)	M16	220 (8.66)	M16	255 (10.04)
80 (3)	M20	295 (11.61)	M20	295 (11.61)
100 (4)	M20	295 (11.61)	M20	340 (13.39)
150 (6)	M22	360 (14.17)	M22	390 (15.35)
200 (8)	M22	435 (17.13)	M22	465 (18.31)

○ **Ceramics Tube, ASME Class 150 Wafer** Unit: mm (approx.inch)

Size	Optional code (Grounding Devices)			
	Without Grounding ring, /GRL, /GRH, /GRV, /GRN, /GRJ, /GRW		/GRP, /GRT	
	Nominal Bolt Diameter	Length of Through-bolt	Nominal Bolt Diameter	Length of Through-bolt
15 (0.5)	1/2UNC	155 (6.10)	1/2UNC	190 (7.48)
25 (1)	1/2UNC	190 (7.48)	1/2UNC	190 (7.48)
40 (1.5)	1/2UNC	190 (7.48)	1/2UNC	210 (8.27)
50 (2)	5/8UNC	240 (9.45)	5/8UNC	240 (9.45)
80 (3)	5/8UNC	265 (10.43)	5/8UNC	285 (11.22)
100 (4)	5/8UNC	290 (11.42)	5/8UNC	305 (12.01)
150 (6)	3/4UNC	345 (13.58)	3/4UNC	375 (14.76)
200 (8)	3/4UNC	420 (16.54)	3/4UNC	450 (17.72)

All Rights Reserved. Copyright © 2017, Yokogawa Electric Corporation

- **Dedicated mouonting bolt (Size 50 mm / 2 in, Submersibe, JIS 20K Wafer only)**

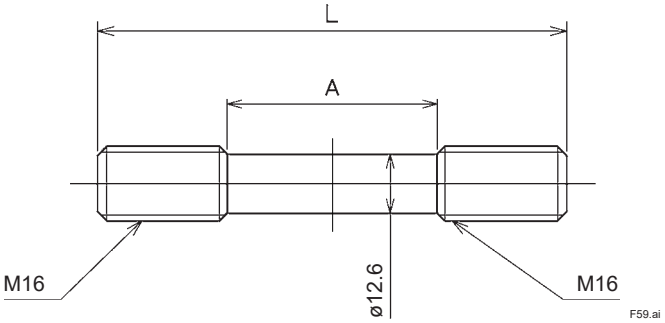

Unit: mm (approx.inch)

Optional code (Grounding Devices)	Nominal Bolt Diameter	Length of Through-bolt L	Length of bolt without Screw A	Bolt Diameter without Screw
Without Grounding ring, /GRL,/GRH,/GRV, /GRN,/GRJ,/GRW	M16	185 (7.28)	100 (3.94)	12.6 (0.50)
/GRP,/GRT, /GAN	M16	220 (8.66)	120 (4.72)	12.6 (0.50)

(6) Limit Deviation

Unless otherwise specified, size limit deviation in the drawings are as shown in the following table.

General limit deviation in the dimensional outline drawing.

Unit: mm (approx. in.)

Category of basic size		Limit deviation	Category of basic size		Limit deviation
Above	Equal or below		Above	Equal or below	
	3 (0.12)	±0.7 (±0.03)	500 (19.69)	630 (24.80)	±5.5 (±0.22)
3 (0.12)	6 (0.24)	±0.9 (±0.04)	630 (24.80)	800 (31.50)	±6.25 (±0.25)
6 (0.24)	10 (0.39)	±1.1 (±0.04)	800 (31.50)	1000 (39.37)	±7.0 (±0.28)
10 (0.39)	18 (0.71)	±1.35 (±0.05)	1000 (39.37)	1250 (49.21)	±8.25 (±0.32)
18 (0.71)	30 (1.18)	±1.65 (±0.06)	1250 (49.21)	1600 (62.99)	±9.75 (±0.38)
30 (1.18)	50 (1.97)	±1.95 (±0.08)	1600 (62.99)	2000 (78.74)	±11.5 (±0.45)
50 (1.97)	80 (3.15)	±2.3 (±0.09)	2000 (78.74)	2500 (98.43)	±14.0 (±0.55)
80 (3.15)	120 (4.72)	±2.7 (±0.11)	2500 (98.43)	3150 (124.02)	±16.5 (±0.65)
120 (4.72)	180 (7.09)	±3.15 (±0.12)			
180 (7.09)	250 (9.84)	±3.6 (±0.14)			
250 (9.84)	315 (12.40)	±4.05 (±0.16)			
315 (12.40)	400 (15.75)	±4.45 (±0.18)			
400 (15.75)	500 (19.69)	±4.85 (±0.19)			

Remarks: The numeric is based on criteria of standard tolerance grade IT18 in JIS B 0401-1.

All Rights Reserved. Copyright © 2017, Yokogawa Electric Corporation

■ SIZING DATA

SI Units Size: mm

* Measurable flow velocity is from 0 m/s.

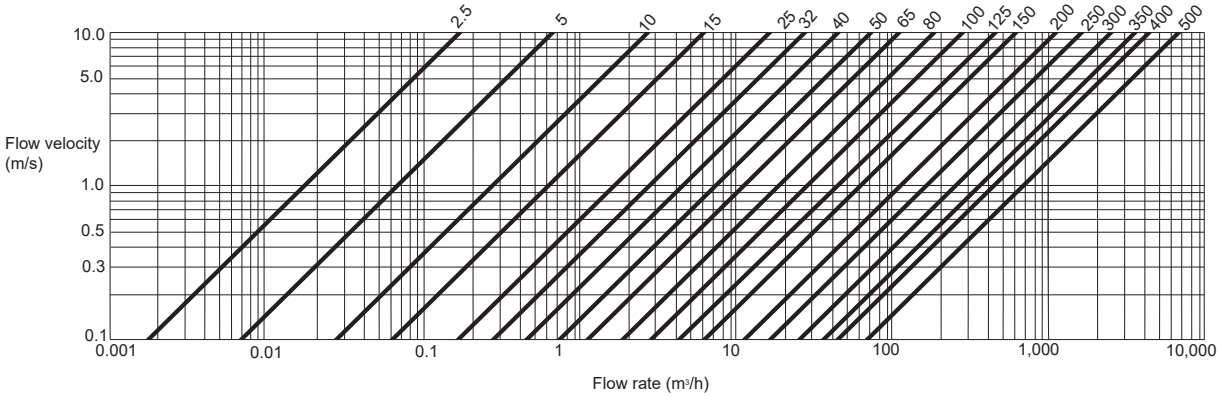

English Units Size: inch

* Measurable flow velocity is from 0 ft/s.

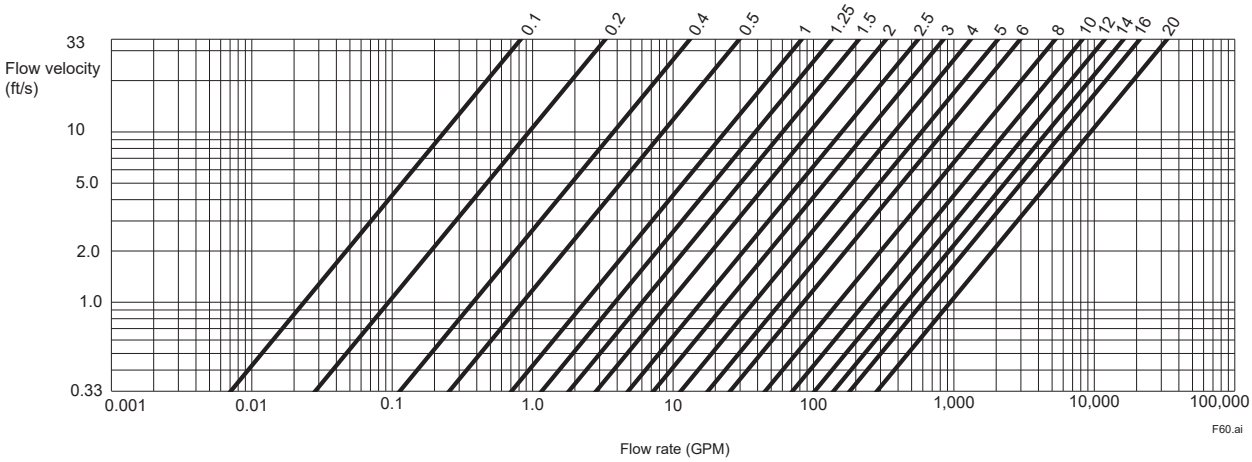

All Rights Reserved. Copyright © 2017, Yokogawa Electric Corporation

■ ORDERING INFORMATION

Note 1: When ordering, the span flow rate, unit, output pulse weight, and totalizer display pulse weight can be specified. These parameters will be set before shipment. In the case of remote type, specify combination information of sensor and transmitter. These parameters will be set in the combined transmitter. When ordering of a remote sensor alone or a remote transmitter alone, these parameters cannot be specified. Custom configuration request is necessary for setting these parameters out of regular setting range.

Note 2: Some options, if ordered, require the relevant specifications to be input when ordering.

Note 3: For AXG4A FOUNDATION Fieldbus type remote transmitter, read general specifications (GS 01E21F02-01EN). For AXG4A EtherNet/IP type remote transmitter, read general specifications (GS 01E21F02-02EN) For AXG4A PROFIBUS PA type remote transmitter, read general specifications (GS 01E21F02-03EN). For AXG1A remote transmitter, read general specifications (GS 01E22C01-01EN). For AXFA11G remote transmitter, read general specifications (GS 01E20C01-01E). The contents and conditions of ordering informations are different.

1. Model, Suffix Code and Optional Code
2. Combination

   This is necessary when ordering combination of remote sensor and transmitter. Specify the combination of a sensor and a transmitter one by one by their model name, specification code, or Tag No. etc. On the nameplate of each sensor and transmitter, the serial number of the specified combination partner is described when shipped.
3. Tag No.

   The Tag No. can be specified by a combination of the characters shown in the following table.

Symbol	-	Hyphen-minus	.	Period		Space (*1)
	_	Underscore	=	Equal sign	+	Plus sign
	/	Slash	(	Left round bracket	)	Right round bracket
	:	Colon	#	Hash mark	!	Exclamation mark
Number	0, 1, 2, 3, 4, 5, 6, 7, 8, 9					
Uppercase letter	A, B, C, D, E, F, G, H, I, J, K, L, M, N, O, P, Q, R, S, T, U, V, W, X, Y, Z					
Lowercase letter (*2)	a, b, c, d, e, f, g, h, i, j, k, l, m, n, o, p, q, r, s, t, u, v, w, x, y, z					

*1: Leading and trailing space characters are deleted and left-justified, then printed on the name plate/ tag plate and written to the amplifier memory.

*2: When Communication and I/O code J# (HART communication) is specified, the lowercase letters are converted to uppercase and written to the parameter “Tag”. For parameter “Long Tag”, they are written in lowercase as is.

Tag No. can be "described on the nameplate and stainless steel tag plate (optional code SCT)" and "set to the memory in the transmitter". Refer to the table below for the item to be specified.

Described/ Setting Destination	Items to be Specified	Maximum Number of Characters
• Name plate • Stainless steel tag plate (Optional code SCT)	TAG NO	30 (*)
• Amplifier memory (Integral flowmeter and remote transmitter)		30 (*) There are restrictions on the write destination parameters. Read the next table.
	SOFTWARE TAG (Overrides "TAG NO" designation)	Read the next table

*: For AXFA11G remote transmitter, the maximum number of characters for "TAG NO" is 16.

For integral flowmeter and remote transmitter, the characters specified by "TAG NO" are also written to the memory (parameter) in the amplifier. If it is necessary to specify a different tag number only for the amplifier memory, specify "SOFTWARE TAG". It is also possible to specify only "SOFTWARE TAG". Names of the parameter to be written and the maximum number of characters are as shown in the table below. If the number of specified characters exceed the maximum number, the characters from the beginning up to the maximum number is written.

Tag No. in Amplifier Memory			
Items to be Specified	Communication	Parameter Name	Maximum Number of Characters
TAG NO or SOFTWARE TAG	BRAIN	TAG NO	16
	HART	Long Tag	32 (*)
		Tag	8
	Modbus	Long Tag	32
		Tag	16
	FOUNDATION Fieldbus	PDTag	32
	PROFIBUS PA	PB.TAG_DESC	32
	EtherNet/IP	Long Tag	32
		Tag	16

*: For AXFA11G remote transmitter, the maximum number of characters for "TAG NO" is 16. And as its HART protocol is HART 5, the "Long Tag" is not available.

4. Range and Unit of Flowrate Span

   Specify the range of span flow rate in the range of 0.0001 to 999999000000.0000 (the number of significant digits in operation is the upper six digits). Up to four digits below the decimal point that can be specified (by 0.0001 unit). However, if the transmitter is BRAIN communication type, specify so that it is within the range of 0.0001 to 32000, it is up to four digits below the decimal point when it is included, and the numerical value excluding the decimal point is within 32000.

   Specify units in the unit described in "Flow Calculation Function". This span flow rate is set to the positive first range. Be sure to specify the range and unit of flowrate span when selecting the Mass Unit Setting (optional code MU), Specified Span Five-point Calibration (optional code SC), ISO/IEC 17025 calibration (Specified span, 2 points) (Optional code L11), or ISO/IEC 17025 calibration (Specified span, 4 points) (Optional code L12). When selecting the NAMUR NE21 (optional code E21), specify the span flow rate of 0.5 m/s or more in terms of flow velocity.

All Rights Reserved. Copyright © 2017, Yokogawa Electric Corporation

Unless specified, it is set as the following when shipped.

- Integral Flowmeter, or combined with AXG4A or AXG1A Remote Transmitter span flow rate (unit m^3/h) equivalent to flow velocity 1 m/s
- Combined with AXFA11 Remote Transmitter flow velocity 1 m/s

The measurement flow range (minimum and maximum of span flow rate) is shown below (in the case of flow rate unit m^3/h and GPM). Specify the span flow within this range. The range specifying different unit must also fall into the same flow rate (flow velocity) range after conversion.

Measurable Flow Rate Range

(1) Integral Flowmeter, or combined with AXG4A Remote Transmitter

SI Units (Size: mm, Flow rate: m^3/h)

Size (mm)	0 to Min. Span Flow Rate	0 to Min. Span Flow Rate	0 to Max. Span Flow Rate
	m^3/h (0.1 m/s)	m^3/h (0.5 m/s)	m^3/h (10 m/s)
2.5	0 to 0.0018	0 to 0.0089	0 to 0.1767
5	0 to 0.0071	0 to 0.0354	0 to 0.7068
10	0 to 0.0283	0 to 0.1414	0 to 2.8274
15	0 to 0.0637	0 to 0.3181	0 to 6.3617
25	0 to 0.1768	0 to 0.8836	0 to 17.6714
32	0 to 0.2896	0 to 1.4477	0 to 28.9529
40	0 to 0.4524	0 to 2.2620	0 to 45.2389
50	0 to 0.7069	0 to 3.5343	0 to 70.6858
65	0 to 1.1946	0 to 5.9730	0 to 119.459
80	0 to 1.8096	0 to 9.0478	0 to 180.955
100	0 to 2.8275	0 to 14.1372	0 to 282.743
125	0 to 4.4179	0 to 22.0894	0 to 441.786
150	0 to 6.3618	0 to 31.8087	0 to 636.172
200	0 to 11.3098	0 to 56.5487	0 to 1130.97
250	0 to 17.6715	0 to 88.3573	0 to 1767.14
300	0 to 25.4470	0 to 127.235	0 to 2544.69
350	0 to 34.6361	0 to 173.181	0 to 3463.60
400	0 to 45.2390	0 to 226.195	0 to 4523.89

English Units (Size: in., Flow rate: GPM)

Size (in.)	0 to Min. Span Flow Rate	0 to Min. Span Flow Rate	0 to Max. Span Flow Rate
	GPM (0.33 ft/s)	GPM (1.64 ft/s)	GPM (33 ft/s)
0.1	0 to 0.0078	0 to 0.0389	0 to 0.7780
0.2	0 to 0.0312	0 to 0.1557	0 to 3.1122
0.4	0 to 0.1245	0 to 0.6225	0 to 12.4488
0.5	0 to 0.2801	0 to 1.4005	0 to 28.0098
1	0 to 0.7781	0 to 3.8903	0 to 77.8050
1.25	0 to 1.2748	0 to 6.3738	0 to 127.475
1.5	0 to 1.9919	0 to 9.9591	0 to 199.181
2	0 to 3.1123	0 to 15.5611	0 to 311.220
2.5	0 to 5.2597	0 to 26.2982	0 to 525.962
3	0 to 7.9673	0 to 39.8363	0 to 796.724
4	0 to 12.4489	0 to 62.2441	0 to 1244.88
5	0 to 19.4513	0 to 97.2564	0 to 1945.12
6	0 to 28.0099	0 to 140.049	0 to 2800.98
8	0 to 49.7953	0 to 248.977	0 to 4979.52
10	0 to 77.8051	0 to 389.026	0 to 7780.5
12	0 to 112.040	0 to 560.197	0 to 11203.9
14	0 to 152.498	0 to 762.490	0 to 15249.7
16	0 to 199.182	0 to 995.906	0 to 19918.1

(2) Combined with AXG1A Remote Transmitter

SI Units (Size: mm, Flow rate: m^3/h)

Size (mm)	0 to Min. Span Flow Rate	0 to Min. Span Flow Rate	0 to Max. Span Flow Rate
	m^3/h (0.1 m/s)	m^3/h (0.5 m/s)	m^3/h (10 m/s)
2.5	0 to 0.0018	0 to 0.0089	0 to 0.1767
5	0 to 0.0071	0 to 0.0354	0 to 0.7068
10	0 to 0.0283	0 to 0.1414	0 to 2.8274
15	0 to 0.0637	0 to 0.3181	0 to 6.3617
25	0 to 0.1768	0 to 0.8836	0 to 17.6714
32	0 to 0.2896	0 to 1.4477	0 to 28.9529
40	0 to 0.4524	0 to 2.2620	0 to 45.2389
50	0 to 0.7069	0 to 3.5343	0 to 70.6858
65	0 to 1.1946	0 to 5.9730	0 to 119.459
80	0 to 1.8096	0 to 9.0478	0 to 180.955
100	0 to 2.8275	0 to 14.1372	0 to 282.743
125	0 to 4.4179	0 to 22.0894	0 to 441.786
150	0 to 6.3618	0 to 31.8087	0 to 636.172
200	0 to 11.3098	0 to 56.5487	0 to 1130.97
250	0 to 17.6715	0 to 88.3573	0 to 1767.14
300	0 to 25.4470	0 to 127.235	0 to 2544.69
350	0 to 34.6361	0 to 173.181	0 to 3463.60
400	0 to 45.2390	0 to 226.195	0 to 4523.89
500	0 to 70.69	0 to 353	0 to 7068

English Units (Size: in., Flow rate: GPM)

Size (in.)	0 to Min. Span Flow Rate	0 to Min. Span Flow Rate	0 to Max. Span Flow Rate
	GPM (0.33 ft/s)	GPM (1.64 ft/s)	GPM (33 ft/s)
0.1	0 to 0.0078	0 to 0.0389	0 to 0.7780
0.2	0 to 0.0312	0 to 0.1557	0 to 3.1122
0.4	0 to 0.1245	0 to 0.6225	0 to 12.4488
0.5	0 to 0.2801	0 to 1.4005	0 to 28.0098
1	0 to 0.7781	0 to 3.8903	0 to 77.8050
1.25	0 to 1.2748	0 to 6.3738	0 to 127.475
1.5	0 to 1.9919	0 to 9.9591	0 to 199.181
2	0 to 3.1123	0 to 15.5611	0 to 311.220
2.5	0 to 5.2597	0 to 26.2982	0 to 525.962
3	0 to 7.9673	0 to 39.8363	0 to 796.724
4	0 to 12.4489	0 to 62.2441	0 to 1244.88
5	0 to 19.4513	0 to 97.2564	0 to 1945.12
6	0 to 28.0099	0 to 140.049	0 to 2800.98
8	0 to 49.7953	0 to 248.977	0 to 4979.52
10	0 to 77.8051	0 to 389.026	0 to 7780.5
12	0 to 112.040	0 to 560.197	0 to 11203.9
14	0 to 152.498	0 to 762.490	0 to 15249.7
16	0 to 199.182	0 to 995.906	0 to 19918.1
20	0 to 311.3	0 to 1556	0 to 31122

All Rights Reserved. Copyright © 2017, Yokogawa Electric Corporation

(3) Combined with AXFA11 Remote Transmitter

SI Units (Size: mm, Flow rate: m^3/h)

Size (mm)	0 to Min. Span Flow Rate m^3/h (0.1 m/s)	0 to Max. Span Flow Rate m^3/h (10 m/s)
2.5	0 to 0.0018	0 to 0.1767
5	0 to 0.0071	0 to 0.7068
10	0 to 0.0283	0 to 2.8274
15	0 to 0.0637	0 to 6.361
25	0 to 0.1768	0 to 17.671
32	0 to 0.2896	0 to 28.952
40	0 to 0.4524	0 to 45.23
50	0 to 0.7069	0 to 70.68
65	0 to 1.1946	0 to 119.45
80	0 to 1.8096	0 to 180.95
100	0 to 2.8275	0 to 282.74
125	0 to 4.418	0 to 441.7
150	0 to 6.362	0 to 636.1
200	0 to 11.310	0 to 1130.9
250	0 to 17.672	0 to 1767.1
300	0 to 25.447	0 to 2544.6
350	0 to 34.64	0 to 3463
400	0 to 45.24	0 to 4523
500	0 to 70.69	0 to 7068

English Units (Size: in., Flow rate: GPM)

Size (in.)	0 to Min. Span Flow Rate GPM (0.33 ft/s)	0 to Max. Span Flow Rate GPM (33 ft/s)
0.1	0 to 0.0078	0 to 0.7780
0.2	0 to 0.0312	0 to 3.112
0.4	0 to 0.1245	0 to 12.44
0.5	0 to 0.1946	0 to 19.45
1	0 to 0.7781	0 to 77.80
1.25	0 to 1.216	0 to 121.5
1.5	0 to 1.751	0 to 175.0
2	0 to 3.113	0 to 311.2
2.5	0 to 4.863	0 to 486.2
3	0 to 7.003	0 to 700.2
4	0 to 12.45	0 to 1244
5	0 to 19.46	0 to 1945
6	0 to 28.01	0 to 2800
8	0 to 49.80	0 to 4979
10	0 to 77.81	0 to 7780
12	0 to 112.1	0 to 11203
14	0 to 152.5	0 to 15249
16	0 to 199.2	0 to 19918
20	0 to 311.3	0 to 31122

5. Output Pulse Weight (Pulse Status Output 1)

   Specify the volume flow per pulse, after specifying the span flow rate. This output pulse weight is set to the Pulse Status Output 1. For unit, specify "unit/p" which means "(the same unit as the flow rate span)/p".

   (Example: When "m^3" is selected for "Span Flow Rate", "unit/p" means "m^3/p".)

   The specifiable numerical digit and range is the same as that for "4. Range and Unit of Flowrate Span.

   Unless specified, it is set as the following when shipped.

   - Integral Flowmeter, or combined with AXG4A or AXG1A Remote Transmitter 0 [span unit/p]
   - Combined with AXFA11 Remote Transmitter 0 pulse/s

   Not applicable for EtherNet/IP communication type.

6. Totalizer Display Pulse Weight (Totalizer 1)

   Specify the volume flow per pulse, after specifying the span flow rate. This totalizer display pulse weight is set to the Totalizer 1. For unit, specify "unit/p" which means "(the same unit as the flow rate span)/p".

   (Example: When "m^3" is selected for "Span Flow Rate", "unit/p" means "m^3/p".)

   The specifiable numerical digit and range is the same as that for "4. Range and Unit of Flowrate Span.

   Unless specified, it is set as the following when shipped.

   - Integral Flowmeter, or combined with AXG4A or AXG1A Remote Transmitter 1 [span unit/p]
   - Combined with AXFA11 Remote Transmitter 0 pulse/s

7. Mass Unit (optional code MU)

   The flow rate calculation is performed in mass unit. In addition to fluid density, specify span flow rate, output pulse weight, and totalizer display pulse weight in mass unit.

   The specifiable numerical digit and range is the same as that for "4. Range and Unit of FLowrate Span.

   (1) Density

   Numerical Value:

   Specify within six digits (up to three digits below the decimal point) in the range of 500 to 2000 kg/m^3 (4.2 to 16.7 lb/gal, 31.2 to 124.8 lb/cf). If BRAIN communication type is selected, specify so that the numerical value excluding the decimal point is within 32000.

   Unit:

   kg/m^3, lb/gal, lb/cf

   The density of water is about 1000 kg/m^3. Then specify "1000 kg/m^3" in this case. However, as the density varies with temperature, specify the density at the time of flow measurement.

   (2) Flowrate Span

   Numerical Value:

   When setting the mass span flow rate, calculate the volume span flow rate from the "density" and it must be within the measurable flow rate range. The settable numerical range for the mass span flow rate is the same as that for the volume span flow rate.

   Unit:

   Mass Unit: t, kg, g, klb, lb

   Time Unit: /d, /h, /min, /s

   (3) Output Pulse Weight, Totalizer Display Pulse Weight

   For unit, specify "unit/p" which means "(the same unit as the flow rate span)/p".

All Rights Reserved. Copyright © 2017, Yokogawa Electric Corporation

8. Specified Span Five-point Calibration (optional code SC)

   A flow test at the five points around 0, 25, 50, 75, 100% of the customer specified span is performed. In the test certificate (QIC), the result for the customer specified span is recorded instead of that for the standard flow rate of 2 m/s (6.56 ft/s). Corresponding flow velocity of the selectable span lies between 0.5 to 10 m/s (1.64 to 33 ft/s) or 0.8 to 10 m/s (2.62 to 33 ft/s). The latter is applied when the size is 32, 65, or 125 mm (1.25, 2.5, or 5 in.). It is also limited by the capacity of our flow test facility. Specify it within the following range. The specifiable numerical digit and range is the same as that for "4. Range and Unit of FLowrate Span.

Selectable Range of Flow Rate Span

SI Units (Size: mm, Flow rate: m^3/h)

Size (mm)	Min. Span Flow Rate m^3/h (m/s)	Max. Span Flow Rate m^3/h (m/s)
2.5	0.009 (0.5)	0.05 (2.83)
5	0.036 (0.5)	0.20 (2.83)
10	0.15 (0.5)	0.96 (3.40)
15	0.32 (0.5)	2.80 (4.40)
25	0.89 (0.5)	11.0 (6.22)
32	2.32 (0.8)	28.9 (9.98)
40	2.27 (0.5)	28.0 (6.19)
50	3.54 (0.5)	56.0 (7.92)
65	9.56 (0.8)	80.0 (6.70)
80	9.05 (0.5)	126 (6.96)
100	14.2 (0.5)	190 (6.72)
125	35.4 (0.8)	300 (6.79)
150	31.9 (0.5)	380 (5.97)
200	56.6 (0.5)	670 (5.92)
250	88.4 (0.5)	1000 (5.66)
300	128 (0.5)	1200 (4.72)
350	174 (0.5)	1200 (3.46)
400	227 (0.5)	1350 (2.98)
500	354 (0.5)	7068 (10.0)

English Units (Size: in., Flow rate: GPM)

Size (in.)	Min. Span Flow Rate GPM (ft/s)	Max. Span Flow Rate GPM (ft/s)
0.1	0.039 (1.64)	0.2201 (9.28)
0.2	0.1557 (1.64)	0.8805 (9.28)
0.4	0.6225 (1.64)	4.2267 (11.1)
0.5	1.4005 (1.64)	12.328 (14.4)
1	3.8903 (1.64)	48.4315 (20.4)
1.25	10.1981 (2.62)	127.242 (32.7)
1.5	9.9591 (1.64)	123.280 (20.3)
2	15.5611 (1.64)	246.560 (25.9)
2.5	42.0770 (2.62)	352.229 (21.9)
3	39.8363 (1.64)	554.761 (22.8)
4	62.2441 (1.64)	836.544 (22.0)
5	156.052 (2.62)	1320.86 (22.2)
6	140.050 (1.64)	1673.08 (19.5)
8	248.977 (1.64)	2949.92 (19.4)
10	389.026 (1.64)	4402.86 (18.5)
12	560.197 (1.64)	5283.44 (15.4)
14	762.490 (1.64)	5283.44 (11.3)
16	995.906 (1.64)	5943.87 (9.78)
20	1556.11 (1.64)	31119.4 (32.8)

9. Direction of Cable Entry (optional code RH)

   Rotate the transmitter of integral flowmeter or the terminal box of remote sensor and change the direction of the cable entry. See the table below and specify either +90, +180, or -90 degree. When the direction of cable entry is not changed, optional code RH is not necessary.

	Direction of Cable Entry			
	Standard (0 degree)	+90 degree rotation	+180 degree rotation	-90 degree rotation
Integral Flowmeter	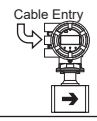	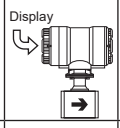	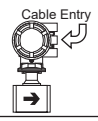	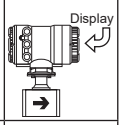
Remote Sensor	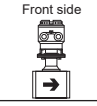	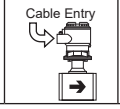		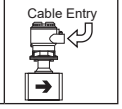

10. Direction of Display

    When the specification "With Display" is selected for the integral flowmeter or the remote transmitter, specify direction of the display. For the integral flowmeter, specify according to the horizontal or vertical direction of the installation piping. For the remote transmitter, specify according to the positional relation of mounting bracket or mounting pipe.

	Direction of Display		Without Display
	Horizontal	Vertical	
Integral Flowmeter	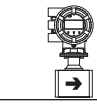	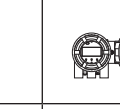	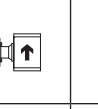
Remote Transmitter	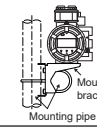	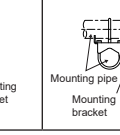	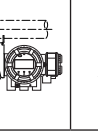

11. Fluid Name

12. Modbus Protocol parameters

    Specify the following parameters for Modbus communication.

Parameter to be specified	Selectable value
Baud rate [bps]	1200, 2400, 4800, 9600, 19200*, 38400, 57600, 115200
Stop bit	1 bit*, 2 bits
Parity bit	Odd, Even*, None
Slave address	1* to 247 (decimal value.)

*: Factory default setting. If the parameter is not specified at ordering, these settings are applied to the parameter for Modbus communication.

All Rights Reserved. Copyright © 2017, Yokogawa Electric Corporation

13. EtherNet/IP communication parameters

The following parameters can be set at factory.

Parameter to be specified	Value
DHCP enable	Disable*, Enable
IP address	192.168.1.210*
Subnet mask	255.255.255.0*
Default gateway	(empty)*

*: Factory default setting. If the parameter is not specified at ordering, these settings are applied to the parameter for EtherNet/IP communication.

14. ISO/IEC 17025 calibration (optional code L10, L11, L12)

Please specify the customer name, address, and flow rate span (only for L11, L12). Please refer to the "ISO/IEC 17025 calibration-related confirmation list" when ordering.

In the test certificate (QIC), the result for the customer specified span is recorded instead of that for the standard flow rate of 2 m/s (6.56 ft/s), when the optional codes L11 or L12 is selected. Please refer to the "ISO/IEC 17025 Calibration Confirmation" when ordering.

■ RELATED INSTRUMENTS

Product	Document Number
AM012 Calibrator for Magnetic Flowmeter	GS 1E6K2-E
BT200 BRAIN TERMINAL	GS 01C00A11-00EN
AXFA11G Magnetic Flowmeter Remote Converter	GS 01E20C01-01E
AXG1A Magnetic Flowmeter Remote Transmitter	GS 01E22C01-01EN
Magnetic Flowmeter CA Series	GS 01E40A01-01EN
ADMAG CA Capacitance Magnetic Flowmeter	GS 01E08B01-00E
FieldMate Versatile Device Management Wizard	GS 01R01A01-01E
ADMAG TI Series AXW Magnetic Flowmeter [Size: 25 to 400 mm (1 to 16 in.)]	GS 01E24A01-01EN
ADMAG TI Series AXW Magnetic Flowmeter [Size: 500 to 1800 mm (20 to 72 in.)]	GS 01E25D11-01EN
ADMAG TI Series FOUNDATION Fieldbus	GS 01E21F02-01EN
ADMAG TI Series EtherNet/IP	GS 01E21F02-02EN
ADMAG TI Series PROFIBUS PA	GS 01E21F02-03EN
FSA130 ADMAG TI Verification Tool	GS 01E21A04-01EN

■ REFERENCE STANDARD

Design and Test on Magnetic Flowmeters:

JIS B 7554(1997), ISO 20456(2017),
NAMUR NE70(2006), ASME MFC-16-2014

■ SECURITY

For EtherNet/IP communication type, The device can be supported as a range of warranty only when the device is installed and used in Control and Field network.

Operator must have the responsible for IT security of equipment that is connected with the device, and this device must not connect with IT network.

In addition, parameter configuration can be locked by hardware switch.

■ TRADEMARKS

HART is a registered trademark of FieldComm Group.

Viton is a registered trademark of DuPont.

Tri-Clamp is a registered trademark of Alfa Laval.

Modbus is a registered trademark of AEDG Schneider.

"FOUNDATION" in "FOUNDATION Fieldbus" is a registered trademark of FieldComm Group.

PROFIBUS is a registered trademark of Profibus Nutzerorganisation e.v., Karlsruhe, Germany.

"EtherNet/IP", "CIP" and "ODVA" are trademarks or registered trademarks of ODVA Inc.

3-A is a registered trademark of 3-A Sanitary Standards Inc.

Det Norske Veritas is a registered trademark of Det Norske Veritas Group.

ADMAG, AXG, AXW, BRAIN TERMINAL, and FieldMate are registered trademarks of Yokogawa Electric Corporation.

All other company and product names mentioned in this document are trade names, trademarks or registered trademarks of their respective companies.

In this document, trademarks or registered trademarks are not marked with ™ or ®.

Note: The terms “transmitter” and “sensor” in this document are used in the same manner as “converter” and “flowtube” respectively which are used for our previous magnetic flowmeter models.

<Information on EU WEEE Directive>

EU WEEE (Waste Electrical and Electronic Equipment)

Directive is only valid in the EU.

This instrument is intended to be sold and used only as a part of equipment which is excluded from WEEE

Directive, such as large-scale stationary industrial tools, a large-scale fixed installation and so on, and, therefore, subjected to the exclusion from the scope of the WEEE Directive. The instrument should be disposed of in accordance with local and national legislation/regulations.

All Rights Reserved. Copyright © 2017, Yokogawa Electric Corporation
Subject to change without notice.