User's Manual

ADMAG TI Series AXG Magnetic Flowmeter Installation Manual

IM 01E22A01-01EN

Integral Flowmeter (AXG###)

Remote Sensor (AXG###)

Remote Transmitter (AXG1A)

Remote Transmitter (AXG4A)

Remote Transmitter (AXFA11G)

This manual outlines the basic guidelines for installation and wiring procedures. For the items which are not covered in this manual, read the user's manuals and the general specifications as listed in Table 1.1.
For explosion protection type, also read the applicable user's manual as listed in Table 1.1.

Contents

1. Introduction
1.1 For Safe Use of Product 3
1.2 Warranty....6
1.3 Combination for Remote Sensor and Remote Transmitter 6

2. Receiving and Storage
2.1 Model and Specifications Check 7
2.2 Storage Precautions 8

3. Installation
3.1 Piping Design Precautions 9
3.2 Handling Precautions.... 12
3.2.1 General Precautions.... 12
3.2.2 Flowmeter Piping.... 13
3.3 Integral Flowmeter and Remote Sensor Installation .. 13
3.3.1 Size 2.5 to 10 mm (0.1 to 0.4 in.), Union Joint Type.... 13
3.3.2 Size 2.5 to 200 mm (0.1 to 8 in.), Wafer Type .. 15
3.3.3 Size 2.5 to 500 mm (0.1 to 20 in.), Flange Type.... 24
3.3.4 Gasket Size (customer pipe).... 29
3.3.5 Size 15 to 125 mm (0.5 to 5 in.), Hygienic Type.... 30
3.4 Remote Transmitter Installation.... 32
3.4.1 Installation Location.... 32
3.4.2 Mounting of AXG4A Transmitter.... 32
3.4.3 Mounting of AXG1A Transmitter.... 33
3.4.4 Mounting of AXFA11 Transmitter.... 33
3.5 Changing Direction of Cable Entry 34
3.6 Changing Direction of Display Unit.... 35

4. Wiring
4.1 Wiring Precautions.... 37
4.2 Cables.... 38
4.3 Cable Entries 39
4.4 Connecting to External Products of Integral Flowmeter and Remote Transmitter.... 43
4.5 Connecting to Remote Sensor and Remote Transmitter (Sensor Side).... 51
4.6 Input and Output 55

5. Basic Operating Procedures
5.1 Operation by Display unit.... 60
5.2 Display and Basic Configuration.... 60
5.3 Display Mode and Setting Mode.... 63
5.4 Parameter Setting from Display Panel 64
5.5 microSD Card Setting.... 66
5.6 BRAIN Configuration Tool.... 66
5.7 HART Configuration Tool 67
5.8 Modbus Configuration Tool.... 68
5.9 FOUNDATION fieldbus Configuration Tool.... 69
5.10 PROFIBUS PA Configuration Tool.... 70
5.11 EtherNet/IP Configuration Tool 71

6. Operation
6.1 Pre-operation Zero Adjustment.... 72
6.2 Zero Adjustment from Display Unit 72
6.3 Hardware Switch Setting 73
6.4 Setting the correction factor.... 79

7. Errors and Countermeasures (Display unit)

YOKOGAWA
Yokogawa Electric Corporation

IM 01E22A01-01EN
16th Edition

1. Introduction

This manual provides the basic guidelines for installation, wiring procedures and basic operation of ADMAG TI (Total Insight) Series AXG magnetic flowmeters with BRAIN, HART, Modbus, FOUNDATION Fieldbus, PROFIBUS PA and EtherNet/IP protocol.
For the items which are not covered in this manual, read the applicable user's manuals and general specifications as listed in Table 1.1. These documents can be downloaded from the YOKOGAWA website. To ensure correct use of the product, read these manuals thoroughly and fully understand how to operate the product before operating it. For method of checking the model and specifications, read Chapter 2 and general specifications as listed in Table 1.1.
Website address: http://www.yokogawa.com/fld/doc/
These manuals can be downloaded from the website of YOKOGAWA or purchased from the YOKOGAWA representatives.

Table 1.1 Manual and General Specifications List

Model	Document Title	Document No.
AXG### AXG4A AXG1A AX01C	ADMAG TI Series AXG###, AXW###, AXG4A, AXW4A, AXG1A Magnetic Flowmeter Read Me First (Optional Code EC)	IM 01E21A11-01EN
	ADMAG TI Series AXG###, AXW###, AXG4A, AXW4A, AXG1A Magnetic Flowmeter Read Me First	IM 01E21A21-01Z1
	ADMAG TI Series AXG/AXW Magnetic Flowmeter Safety Manual	IM 01E21A21-02EN
	ADMAG TI Series AXG Magnetic Flowmeter Installation Manual	IM 01E22A01-01EN (this manual)
	ADMAG TI Series AXG Magnetic Flowmeter Maintenance Manual	IM 01E22A01-02EN
	ADMAG TI Series AXG, AXW Magnetic Flowmeter BRAIN Communication Type	IM 01E21A02-01EN
	ADMAG TI Series AXG, AXW Magnetic Flowmeter HART Communication Type	IM 01E21A02-02EN
	ADMAG TI Series AXG/AXW Magnetic Flowmeter FOUNDATION Fieldbus Communication Type	IM01E21A02-03EN
	ADMAG TI Series AXG, AXW Magnetic Flowmeter PROFIBUS PA Communication Type	IM 01E21A02-04EN
	ADMAG TI Series AXG, AXW Magnetic Flowmeter Modbus Communication Type	IM 01E21A02-05EN
	ADMAG TI Series AXG, AXW Magnetic Flowmeter EtherNet/IP Communication Type	IM 01E21A02-06EN
	ADMAG TI Series AXG1A Magnetic Flowmeter Remote Transmitter BRAIN Communication Type	IM 01E22C02-01EN
	ADMAG TI Series AXG1A Magnetic Flowmeter Remote Transmitter HART Communication Type	IM 01E22C02-02EN
AXG### AXG4A AXG1A AX01C	ADMAG TI Series AXG Magnetic Flowmeter General Specifications	GS 01E22A01-01EN
	ADMAG TI Series AXG1A Magnetic Flowmeter Remote Transmitter General Specifications	GS 01E22C01-01EN
AXFA11G	AXF Series Magnetic Flowmeter Read Me First	IM 01E20A21-01Z1
	AXFA11G Remote Converter [Hardware Edition/Software Edition]	IM 01E20C01-01E
	AXFA11G Remote Converter General Specifications	GS 01E20C01-01E
AXG### AXG4A	ADMAG TI Series AXG Magnetic Flowmeter FM (USA) Explosion Protection Type	IM 01E21A03-01EN
	ADMAG TI Series AXG/AXW Magnetic Flowmeter ATEX Explosion Protection Type	IM 01E21A03-02EN
	ADMAG TI Series AXG/AXW Magnetic Flowmeter IECEx Explosion Protection Type	IM 01E21A03-03EN
	ADMAG TI Series AXG Magnetic Flowmeter FM (Canada) Explosion Protection Type	IM 01E21A03-09EN
	ADMAG TI Series AXG and AXW Magnetic Flowmeter China (NEPSI) Explosion Protection Type	IM 01E21A03-05EN

NOTE

When describing the model name like AXG### in this manual, "###" means any of the following.
002, 005, 010, 015, 025, 032, 040, 050, 065, 080, 100, 125, 150, 200, 250, 300, 350, 400, 500

■ Precautions Related to the Protection, Safety, and Alteration of the Product

The following safety symbol marks are used in this manual and product.

WARNING

A WARNING sign denotes a hazard. It calls attention to procedure, practice, condition or the like, which, if not correctly performed or adhered to, could result in injury or death of personnel.

CAUTION

A CAUTION sign denotes a hazard. It calls attention to procedure, practice, condition or the like, which, if not correctly performed or adhered to, could result in damage to or destruction of part or all of the product.

All Rights Reserved, Copyright © 2016, Yokogawa Electric Corporation

IMPORTANT

An IMPORTANT sign denotes that attention is required to avoid damage to the product or system failure.

NOTE

A NOTE sign denotes information necessary for essential understanding of operation and features.

The following symbols are used in the Product and the manual to indicate the accompanying safety precautions:

- Protective grounding terminal
- Functional grounding terminal (This terminal should not be used as a protective grounding terminal.)
- Alternating current
- Direct current
- Caution
  This symbol indicates that the operator must refer to an explanation in the user's manual in order to avoid the risk of injury or death of personnel or damage to the product.

- For the protection and safe use of the product and the system in which this product is incorporated, be sure to follow the instructions and precautions on safety that is stated in this manual whenever you handle the product. Take special note that if you handle the product in a manner that violated these instructions, the protection functionality of the product may be damaged or impaired. In such cases, YOKOGAWA does not guarantee the quality, performance, function, and safety of product.
- When installing protection and/or safety as lighting protection devices and equipment for the product and control system or designing or installing separate protection and/or safety circuits for fool-proof design and fail-safe design of the processes and lines that use the product and the control system, the user should implement these using additional devices and equipment.
- Should use the parts specified by YOKOGAWA when replacing. Please contact YOKOGAWA's service office for fuse replacement.
- This product is not designed or manufactured to be used in critical applications that directly affect or threaten human lives. Such applications include nuclear power equipment, devices using radioactivity, railway facilities, aviation equipment, air navigation facilities, aviation facilities, and medical equipment. If so used, it is the user's responsibility to include in the system additional equipment and devices that ensure personnel safety.
- Do not modify this product.
- YOKOGAWA will not be liable for malfunctions or damage resulting from any modification made to this product by the customer.
- The product should be disposed of in accordance with local and national legislation/regulations.

■ Regarding This User's Manual

- This manual should be provided to the end user.
- The contents of this manual are subject to change without prior notice.
- All rights reserved. No part of this manual may be reproduced in any form without YOKOGAWA's written permission.
- YOKOGAWA makes no warranty of any kind with regard to this manual, including, but not limited to, implied warranty of merchantability and fitness for a particular purpose.
- If any question arises or errors are found, or if any information is missing from this manual, inform the nearest YOKOGAWA sales office.
- The specifications covered by this manual are limited to those for the standard type under the specified model number break-down and do not cover custom-made products.
- Note that changes in the specifications, construction, or component parts of the product may not immediately be reflected in this manual at the time of change, provided that postponement of revisions will not cause difficulty to the user from a functional or performance standpoint.
- This manual is intended for the following personnel;
  Engineers responsible for installation and wiring of the product.
  Personnel responsible for normal daily operation of the product.
- To ensure correct use, read this manual and the applicable manuals as listed in Table 1.1 thoroughly before starting operation. Read the general specifications as listed in Table 1.1 for its specification.

■ Trademarks:

- HART is a registered trademark of FieldComm Group.
- Modbus is a registered trademark of AEG Schneider.
- FOUNDATION is a registered trademark of FieldComm Group.
- PROFIBUS is a registered trademark of Profibus Nutzerorganisation e.v., Karlsruhe, Germany.
- "EtherNet/IP", "CIP" and "ODVA" are trademarks or registered trademarks of ODVA Inc.
- 3-A is a registered trademark of 3-A Sanitary Standard,Inc.
- All the brands or names of Yokogawa Electric's products used in this manual are either trademarks or registered trademarks of Yokogawa Electric Corporation.
- All other company and product names mentioned in this manual are trade names, trademarks or registered trademarks of their respective companies.
- In this manual, trademarks or registered trademarks are not marked with ™ or ®.

1.1 For Safe Use of Product

For the protection and safe use of the product and the system in which this product is incorporated, be sure to follow the instructions and precautions on safety that is stated in this manual whenever you handle the product. Take special note that if you handle the product in a manner that violated these instructions, the protection functionality of the product may be damaged or impaired. In such cases, YOKOGAWA shall not be liable for any indirect or consequential loss incurred by either using or not being able to use the Product.

(1) General

- This product conforms to IEC safety class I (with Protective grounding terminal), Installation Category (Overvoltage Category) II, No Measurement Category (“O”(Other)), Micro Pollution degree 2, Macro Pollution degree 4.
- This product conforms to EN61326-1, EN61326-2-3, EN61326-2-5, EN61000-3-2, and EN61000-3-3 (EMC standard).
- This product is an EN61326-1 (EMC standard), Class A (for use in commercial, industrial, or business environments).
- This product conforms to the standard specifications of CIP for EtherNet/IP communication.
- This product is complied with IP66 and IP67, IP68 (only for Submersible type) in the EN60529. YOKOGAWA assumes no liability for the customer’s failure to comply with these requirements.
- This product is designed for indoor and outdoor use.
- This product is designed for altitude at installation site Max. 2000 m above sea level.

CAUTION

This product is a Class A product in the EN61326-1(EMC standard). Operation of this product in a residential area may cause radio interference, in which case the user is required to take appropriate measures to correct the interference.

IMPORTANT

The minimum ambient temperature is limited by the minimum fluid temperature of the sensor (the lining). For more information, read the applicable general specifications as listed in Table 1.1.
The flowmeter may be used in an ambient humidity where the relative humidity ranges from 0 to 100%. However, avoid long-term continuous operation at relative humidity above 95%.

WARNING

- **Purpose of use**
  This product is the Magnetic Flowmeter for use of measuring the liquid flow. Do not use this product for other purposes.

WARNING

- Installation, wiring and maintenance of the magnetic flowmeter must be performed by expert engineer or skilled personnel. No operator shall be permitted to perform procedures relating to installation, wiring and maintenance.
- Wiring work should be done adequate wire, sleeve crimp and torque force. Use terminal with insulating cover for the power supply wiring and protective grounding wiring. Do not pull the wires too much strongly in order to prevent electric shocks caused by their damage.
- Do not open the cover in wet weather or humid environment. When the cover is open, stated enclosure protection is not applicable.
- Ensure that the power supply is off in order to prevent electric shocks.
- When opening the cover, wait for more than 20 minutes after turning off the power. Only expert engineer or skilled personnel are permitted to open the cover.
- When opening and closing the transmitter cover, be sure to handle the transmitter cover carefully so that there are no damage and foreign matter adhesion at its threads and O-ring.
- This product employs the parts which are affected by a function damage caused by static electricity. Thus, you should do the antistatic work using an anti-static wrist band for it and be careful to avoid touching each electrical parts and circuitry directly.
- When connecting the wiring, check that the supply voltage is within the range of the voltage specified for this product before connecting the power cable. In addition, check that no voltage is applied to the power cable before connecting the wiring.
- To prevent electric shocks, ensure the electrical wiring cover is completely attached after the wiring work.
- To prevent electric shocks, do not impress over rated voltage to each input/output terminals.
- If there is any unused cable entry, use the blanking plug to cover which comes with this product or which is supplied by YOKOGAWA. The blanking plug should be fastened into the unused cable entry without any mistake. If not, stated enclosure protection is not applicable.
- To prevent electric shocks, do not remove safety cover (Read section 3.6).

IMPORTANT

- When closing the cover, close it with both hands until the cover does not turn in order to bring the housing and cover into tight contact.
- Tighten while confirming that the cover rotates smoothly.

(2) Installation

WARNING

- For AXG1A, impact resistance rating of glass on the display cover is IK06, metal housing is IK08.
  In the test method, the steel ball is dropped from a height of 200 mm after pre-cooling the housing to -40 degree C. (Impact on horizontal surface)
- The magnetic flowmeter is a heavy product.
  Be careful that no damage is caused personnel through accidentally dropping it, or by exerting excessive force on the magnetic flowmeter. When moving the magnetic flowmeter, always use a trolley and have at least two people carry it.
- Do not apply excessive weight, for example, a person stepping on the magnetic flowmeter.
- The magnetic flowmeter must be installed within the specification conditions.
- **Connect the Protective Grounding Terminal**
  Ensure to connect the protective grounding to prevent electric shock before turning on the power.
- **Do Not Impair the Protective Grounding**
  Never cut off the internal or external protective grounding wire or disconnect the wiring of the protective grounding terminal. Doing so invalidates the protective functions of the product and poses a potential shock hazard.
- **Do Not Operate with Defective Protective Grounding**
  Do not operate the product if the protective grounding might be defective. Also, ensure to check them before operation.
- **Do Not Operate in an Explosive and Corrosive Atmosphere**
  Do not operate the product in the presence of flammable gas, vapors, or combustible dust in general use. Select the explosion protection type under the explosion-proof environment. Operate the the product comply to appropriate explosion-proof certificate in the presence of flammable gas or combustible dust. Prolonged use in a highly dense corrosive gas (H_2S, SO_x, etc.) will cause a malfunction.
- **Ground the Product before Making External Connections**
  Connect the protective grounding before connecting to the item under measurement or control unit.
- **Damage to the Protection**
  Operating the product in a manner neither described in this manual nor the manuals as listed in Table 1.1 may damage the product's protection.
- The flowmeter should be installed away from electrical motors, transformers, and other power sources in order to avoid interference with measurement.

WARNING

- Install an external switch or circuit breaker as a means to turn the power off (capacitance: 15A, conforming to IEC60947-1, IEC60947-2 and IEC60947-3).
  Locate this switch either near the product or in other places facilitating easy operation. Affix a "Power Off Equipment" label to this external switch or circuit breaker.
- All procedures relating to installation must comply with the electrical code of the country where it is used.

(3) Wiring

WARNING

- In cases where the ambient temperature exceeds 50°C, use external heat resistant wiring with a maximum allowable temperature of 70°C or above.
- When wiring the conduits, pass the conduit through the wiring connection port, and utilize the waterproof gland to prevent water from flowing in. Install a drain valve at the low end of the vertical pipe, and open the valve regularly.
- Do not connect cables outdoors in wet weather in order to prevent damage from condensation and to protect the insulation, e.g. inside the terminal box of the flowmeter.
- The transmitter case should be removed by YOKOGAWA's qualified personnel only. Opening the transmitter case is dangerous, because some areas inside the product have high voltages.
- The protective grounding must be connected securely at the terminal with the ⏚ mark to avoid danger to personnel.

(4) Operation

WARNING

Be sure to enable the write protect function to prevent the overwriting of parameters after finishing parameter setting. In rare cases, the infra-red switches may respond unexpectedly in such conditions as sticking ball of water or extraneous substances on the surface of display panel glass according to the principle of infra-red switch operation. Its probability rises in such cases as sticking rain water by storm or other similar situation and washing up work near flowmeter installation place. Blinking light from a flashlight etc. to the infra-red switches may result in the malfunction.
Read Section 6.3 for the hardware write protect function, and the user's manual of applicable communication type as listed in Table 1.1 for the software write protect function.

(5) Maintenance

WARNING

- When maintaining the product, read the maintenance manual as listed in Table 1.1. Do not perform the maintenance that is not described in the manual. If necessary, contact YOKOGAWA.
- When the magnetic flowmeter is processing hot fluids, the product itself may become extremely hot. Take sufficient care not to get burnt.
- Where the fluid being processed is a toxic substance, avoid contact with the fluid and avoid inhaling any residual gas, even after the product has been taken off the piping line for maintenance and so forth.
- If dirt, dust or other substances surfaces on the glass of display cover, wipe them clean with a soft dry cloth.
- For sanitary type, be careful not to accumulate water in holes and dents.
  If accumulated, clean regularly.
- Maintenance of this flowmeter should be implemented in a maintenance service shop where the necessity tools and environment condition are provided.
  The necessity of this environmental condition is that ambient temperature is 5 to 40°C (the maximum relative humidity is 80 % for temperature 5 to 31°C, and decreasing linearly to 50 % relative humidity at 40°C).

(6) Modification

- Do not modify this product.
- YOKOGAWA will not be liable for malfunctions or damage resulting from any modification made to this product by the customer.

(7) Product Disposal

The product should be disposed of in accordance with local and national legislation/regulations.

(8) Power Supply

Ensure that the source voltage matches the voltage of the power supply before turning on the power.

Power Supply Code 1:

- AC Type:
  Rated Power Supply: 100 to 240 V AC, 50/60 Hz
- DC Type:
  Rated Power Supply: 100 to 120 V DC

Power Supply Code 2:

- AC Type:
  Rated Power Supply: 24 V AC, 50/60 Hz
- DC Type:
  Rated Power Supply: 24 V DC

Power Consumption:

Integral Type: 13W
Remote Type (with AXG4A): 13W
Remote Type (with AXG1A): 32W

Note: Power Consumption is independent of communication and I/O specification.
Note: For AXFA11, read the applicable user's manual as listed in Table 1.1.

(9) microSD Card

IMPORTANT

- Do not store or use the microSD card in places with static electricity, near electrically charged objects, or where electrical noise is present. Doing so can result in shock or damage.
- Do not disassemble or modify the microSD card.
- Do not physically shock, bend, or pinch the microSD card.
- During reading/writing of data, do not turn off the power, apply vibration or shock, or pull out the card. Data can corrupt or be permanently lost.
- Use only micro SD cards sold by YOKOGAWA. Operation cannot be guaranteed when other cards are used.
- When inserting the microSD card into the product, make sure to orient the microSD card correctly (face up or down) and insert it securely. If not inserted correctly, the microSD card will not be recognized by the product.
- Do not touch the microSD card with wet hands.
- Do not use the microSD card if it is dusty or dirty.
- The microSD card comes formatted. If you want to format the microSD card, use the product's Format function.
- YOKOGAWA provides no warranty for damage to, or loss of data recorded on the microSD card, regardless of the cause of such damage or loss. We recommend making backup copies of your data.

(10) Explosion Protection Type

WARNING

- Magnetic flowmeters with the model name AXG is a product which have been certified as explosion protection type products. Strict limitations are applied to the structures, installation locations, external wiring work, maintenance and repairs, etc. of these products. Sufficient care must be taken, as any violation of the limitations may cause dangerous situations.
  Be sure to read the user's manual of the applicable explosion protection type as listed in Table 1.1 before handling the products.
- Only trained persons use this product in the industrial location.
- The protective grounding ⏚ must be connected to a suitable grounding system of explosion protection.
- Take care not to generate mechanical spark when access to the product and peripheral devices in hazardous locations.

(11) Ambient Temperature:

–40 to 60°C (–40 to 140°F)
Note: Minimum value is limited according to minimum fluid temperature of sensor's specification.
Display operating range is –20 to 60°C (–4 to 140°F).
Refer to the applicable user's manual for Explosion protection type.

(12) Ambient Humidity:

0 to 100%
Note: Lengthy continuous operation at 95% or more is not recommended.

1.2 Warranty

- The warranty shall cover the period noted on the quotation presented to the purchaser at the time of purchase. Problems occurred during the warranty period shall basically be repaired free of charge.
- In case of problems, the customer should contact the YOKOGAWA representative from which the product was purchased, or the nearest YOKOGAWA office.
- If a problem arises with this product, please inform us of the nature of the problem and the circumstances under which it developed, including the model specification and serial number. Any diagrams, data and other information you can include in your communication will also be helpful.
- Responsible party for repair cost for the problems shall be determined by YOKOGAWA based on our investigation.
- The Purchaser shall bear the responsibility for repair costs, even during the warranty period, if the malfunction is due to:
  - Improper and/or inadequate maintenance by the purchaser.
  - Failure or damage due to improper handling, use or storage which is out of design conditions.
  - Use of the product in question in a location not conforming to the standards specified by YOKOGAWA, or due to improper maintenance of the installation location.
  - Failure or damage due to modification or repair by any party except YOKOGAWA or an approved representative of YOKOGAWA.
  - Malfunction or damage from improper relocation of the product in question after delivery.
  - Reason of force majeure such as fires, earthquakes, storms/floods, thunder/lightening, or other natural disasters, or disturbances, riots, warfare, or radioactive contamination.

1.3 Combination for Remote Sensor and Remote Transmitter

IMPORTANT

- The AXG remote sensor (sizes 2.5 to 500 mm (0.1 to 20 in.)) should be combined with a remote transmitter according to Table 1.2.
- If the transmitter combined with the AXG magnetic flowmeter's remote sensor is changed from the original transmitter which was delivered the meter factor of the remote sensor must be readjusted according to its flow calibration.
- When AXG and AXG4A is selected obeying the installing condition (explosion proof or non-explosion proof), it is possible to occur the inconvenience for conductivity detection.

Table 1.2 Combination for sensor and transmitter

Remote Sensor		Combined with the Remote Transmitter
Model	Construction Code	Model
AXG002 to AXG400	G	AXG4A
AXG002 to AXG500	E	AXG1A
AXG002 to AXG500	D	AXFA11G

Contact YOKOGAWA before using it in combination with transmitters other than those listed above.

NOTE

In case of combination with AXFA11 remote transmitter, select "ADMAG AXF" in the parameter "C30" of the AXFA11 remote transmitter.

2. Receiving and Storage

When the product is delivered, check visually that no damage has occurred during transportation. Also check that all flowmeters mounting hardware shown below is included.

Integral Flowmeter

Model	Part name	Qty.
AXG###	Centering Device (*1)	1 set
	Blanking Plug (*2)	0 to 2 pcs.
	Gasket (sensor side) (*3)	2 sheets
	Cable Glands (*4)	0 to 2 pcs.

Remote Sensor

Model	Part name	Qty.
AXG###	Centering Device (*1)	1 set
	Gasket (sensor side) (*3)	2 sheets
	Cable Glands (*4)	0 to 3 pcs.
	Dedicated Stud bolt (*5)	2 pcs.

Remote Transmitter

Model	Part name	Qty.
AXG4A	Mounting Bracket	1 set
	Blanking Plug (*2)	0 to 2 pcs.
	Cable Glands (*4)	0 to 5 pcs.
AXG1A	Mounting Bracket	1 set
	Cable Glands (*4)	0 to 5 pcs.
AXFA11G	Mounting Bracket	1 set
	Cable Glands (*4)	0 to 5 pcs.

*1: When the following process connection codes (wafer type) have been selected, the centering device is attached.
AA1, AA2, AE1, AE2, AE4, AG1, AJ1, AJ2, AP1

*2: When the following code is specified for “Power Supply” and “Communication and I/O”, the following quantity of blind plug is attached.

Power Supply code	Communication and I/O code	Qty.
-1	DA, DT, JA, JT, M0, F0, G0, P0	1 pc.
	Other code	0 pc.
-2	DA, DT, JA, JT	2 pcs.
	M2, M6	0 pc.
	Other code	1 pc.

*3: When the following code is specified for “Lining”, gaskets (sensor side) are attached. The gaskets (customer pipe side) should be prepared by customers.
- Lining code: C

*4: Flameproof glands are included depending on the type of Cable Glands.

*5: Size 50 mm / 2 in, Submersible, JIS 20K Wafer only

2.1 Model and Specifications Check

As shown in Figure 2.1 to Figure 2.5, the model, suffix code, serial number, meter factor, fluid specification, and device information are found on the name plate located on the outside of the housing. And, this product can check their information from parameters. Read the user’s manual of applicable communication type as listed in Table 1.1 for checking device information from parameters.
When checking the matching of model and specification you ordered, see the applicable general specifications as listed in Table 1.1.
Be sure you have the model code and serial number available when contacting YOKOGAWA.
The model and specification described on the nameplate are those of the state at the time of shipment.

Note: Description on the nameplate
- Made in _____: Country of origin
- COMB No.: Serial number of the combined remote sensor or remote transmitter

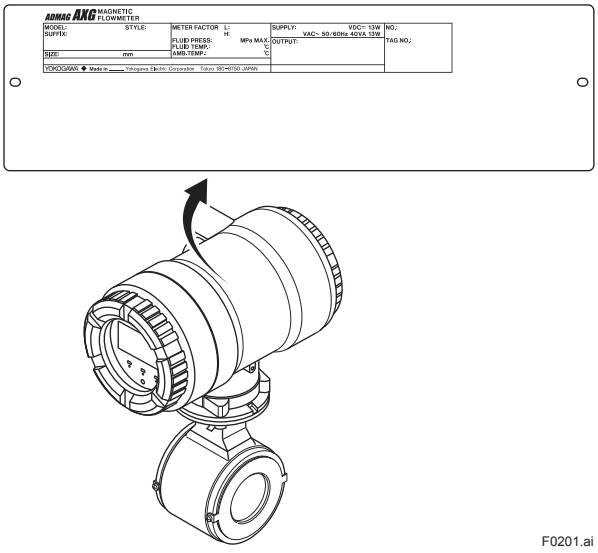

Figure 2.1 Name Plate (AXG Integral Flowmeter)

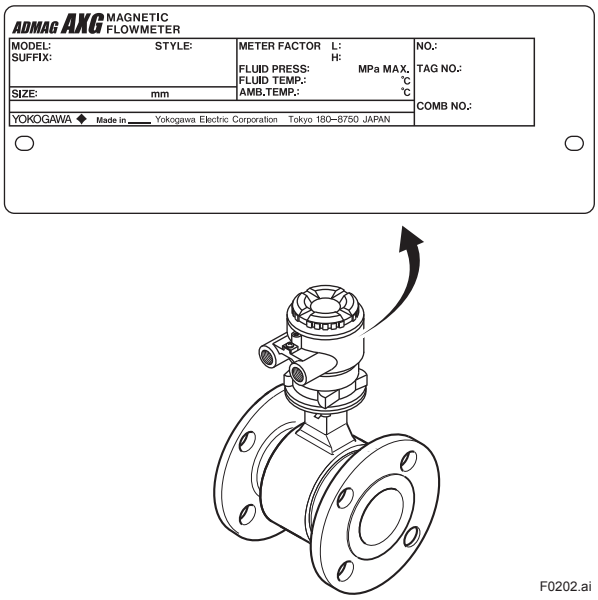

Figure 2.2 Name Plate (AXG Remote Sensor)

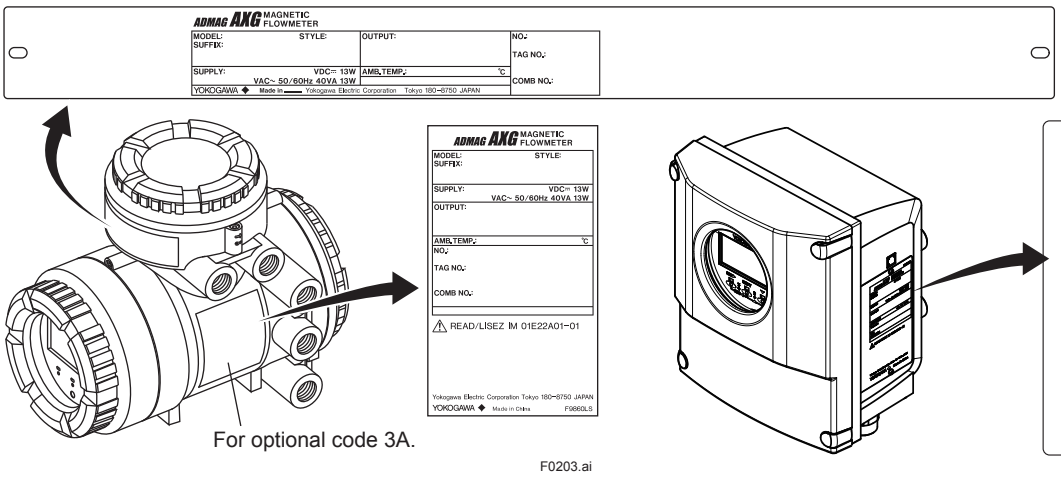

F0203.ai

Figure 2.3 Name Plate (AXG4A Remote Transmitter)

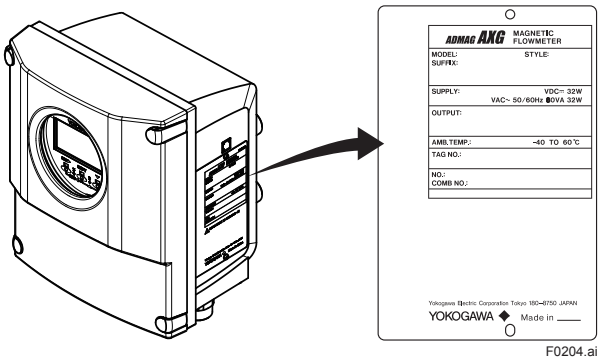

F0204.ai

Figure 2.4 Name Plate (AXG1A Remote Transmitter)

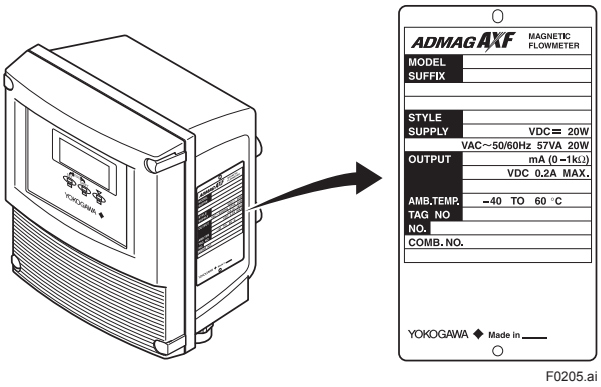

F0205.ai

Figure 2.5 Name Plate (AXFA11 Remote Transmitter)

2.2 Storage Precautions

If the product is to be stored for a long period of time after delivery, observe the following points.

- The product should be stored in its original packing condition in the storage location.
- Select a storage location that fulfils the following conditions:
  - A place where it will not be exposed to rain or water
  - A place subject to minimal vibrations or shocks
  - Temperature and humidity levels should be as follows:
    Temperature: -30 to 70°C
    Humidity: 5 to 80% RH (no condensation)
    The preferred ambient temperature and humidity levels are 25°C and approximately 65% RH.
- If the product is transferred to the installation site and stored without being installed, its performance may be impaired due to the infiltration of rainwater and so forth. Be sure to install and wire the product as soon as possible after transferring it to the installation location.

3. Installation

WARNING

Installation of the magnetic flowmeter must be performed by expert engineer or skilled personnel. No operator shall be permitted to perform procedures relating to installation.

Installation Location Precautions

Select the installation location with consideration to the following items to ensure long-term stable operation of the product.

■ Ambient Temperature:

Avoid installing the product in locations with constantly fluctuating temperatures. If the location is subject to radiant heat from the plant, provide heat insulation or improve ventilation.

■ Atmospheric Condition:

Avoid installing the product in a corrosive atmosphere. In situations where this is unavoidable, consider ways to improve ventilation and to prevent rainwater from entering and being retained in the conduit pipes.

■ Vibrations or Shocks:

Avoid installing the product in a place subject to shocks or vibrations.

3.1 Piping Design Precautions

IMPORTANT

Design piping correctly, referring to the following to prevent damage to sensors and to assure accurate measuring.

NOTE

This section describes the remote sensor as an example. The same attention must be paid to the integral flowmeter.

(1) Location

IMPORTANT

Install the flowmeter in a location where it is not exposed to direct sunlight. The minimum ambient temperature is limited by the minimum fluid temperature of the sensor (the lining). For more information, read the applicable general specification as listed inTable 1.1. The flowmeter may be used in an ambient humidity where the relative humidity ranges from 0 to 100%. However, avoid long-term continuous operation at relative humidity 95% or higher.

(2) Noise Avoidance

IMPORTANT

The flowmeter should be installed away from electrical motors, transformers, and other power sources in order to avoid interference with measurement. When installing two or more magnetic flowmeters, provide a distance of at least 5D (D is size of model code) each other. If diameters of them are different, let D be the larger one.

(3) Required Straight Pipe Length

Based on JIS B 7554 “Electromagnetic Flowmeters” and our piping condition test data, we recommend the piping conditions as shown in the following figures. This is not always enough when the piping line incorporates multiple conditions at the same time.

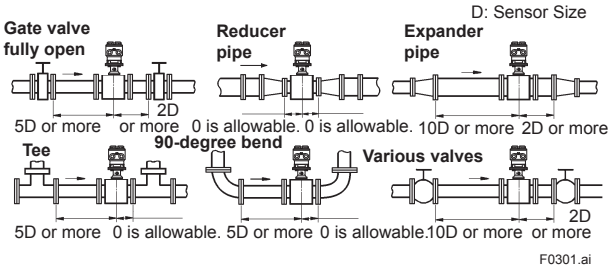

Figure 3.1.1 Required Straight Pipe Length

*1: Do not install anything in the vicinity that may interfere with the magnetic field, induced signal voltages, or flow velocity distributions of the flowmeter.
*2: A straight run may not be required on the downstream side of the flowmeter. However, if a downstream valve or other fitting causes irregularity or deviation in flows, provide a straight run of 2D to 3D on the downstream side.
*3: The valves shall be mounted on the downstream side so that deviated flows do not occur in the sensor and to avoid startup from an empty condition.
*4: In case the piping conditions are compounded, install on the straight pipe section where the upstream part is sufficiently rectified.

(4) Maintaining Stable Fluid Conductivity

IMPORTANT

Do not install the flowmeter where fluid conductivity tends to become uneven. If chemicals are fed near the upstream side of a magnetic flowmeter, they may affect the flow rate’s indications. To avoid this situation, it is recommended that the chemical feed ports be located on the downstream side of the flowmeter. If it is unavoidable that chemicals must be fed on the upstream side, provide a sufficient straight pipe length (approximately 50D or more) to ensure the proper mixture of fluids.

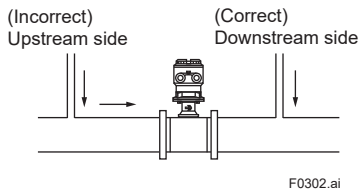

Figure 3.1.2 Chemical Injection

(5) Precautions for Use of Liquid Sealing Compounds

IMPORTANT

Care must be taken in using liquid sealing compounds on the piping, as it may have a negative influence on the flow indications by flowing out and covering the surfaces of an electrode or grounding ring. In particular, care must be taken if a liquid sealing compound is used in the case of vertical piping.

(6) Service Area

Select locations where there is adequate space to service installing, wiring, overhauling, etc.

(7) Bypass Line

It is recommended to install a bypass line to facilitate maintenance and zero adjustment.

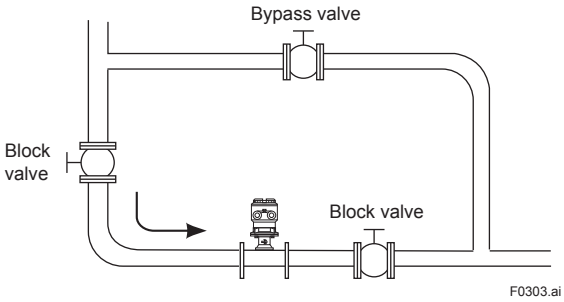

Figure 3.1.3 Bypass Line

(8) Supporting the Flowmeter

CAUTION

Do not secure the flowmeter separately to prevent the vibrations, shocks, and expansion and contraction forces of the piping from affecting it. Fix the pipes first, then support the flowmeter with the pipes. With extra small-sized flowmeters (sizes 2.5 to 15 mm (0.1 to 0.5 in.) except flange type), in particular, fix the flowmeter in parallel with the piping on a mounting base.

(9) Mounting Positions

- **Pipes must be fully filled with liquids.**

IMPORTANT

It is essential that pipes remain fully filled at all times, otherwise flow rate indications may be affected and measurement errors may be caused.
Piping shall be designed so as to maintain the interior of the sensor filled with fluids.
Vertical mounting is effective in such cases as when fluids tend to separate or solid matter may be precipitated. When employing vertical mounting, direct the fluids from the bottom to the top to ensure that the pipes remain fully filled.

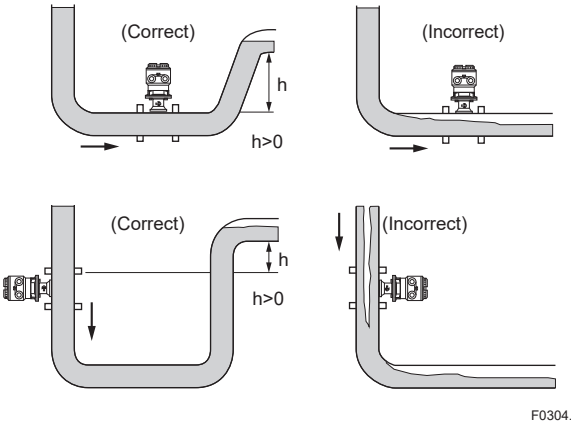

Figure 3.1.4 Mounting Positions

- **Avoid air bubbles.**

IMPORTANT

If air bubbles enter a measurement pipe, flow rate indications may be affected and measurement errors may be caused.

In cases where fluids contain air bubbles, piping must be designed to prevent them from accumulating in the measurement pipe of a sensor.
If a valve exists near the flowmeter, try to mount the flowmeter on the valve's upstream side in order to prevent a possible reduction of pressure inside the pipe, thereby avoiding the possibility of air bubbles.

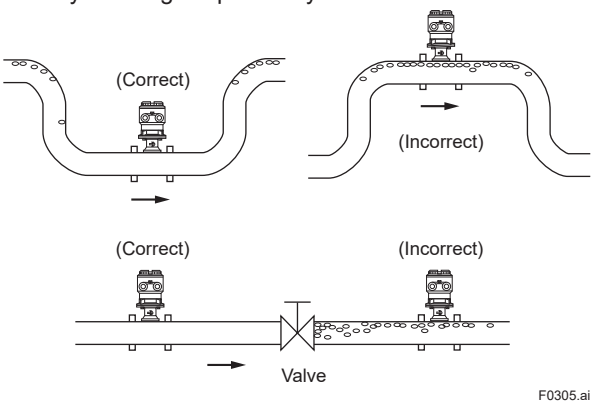

Figure 3.1.5 Avoiding Air Bubbles

- **Mounting orientation**

IMPORTANT

Install the magnetic flowmeter so that the electrodes position is not perpendicular to the ground. Otherwise it may cause the measuring errors because air bubbles at upper side or slurry at downside covers the electrode.
Mount the terminal box of a remote sensor and the transmitter of an integral flowmeter above the piping to prevent water from entering them.

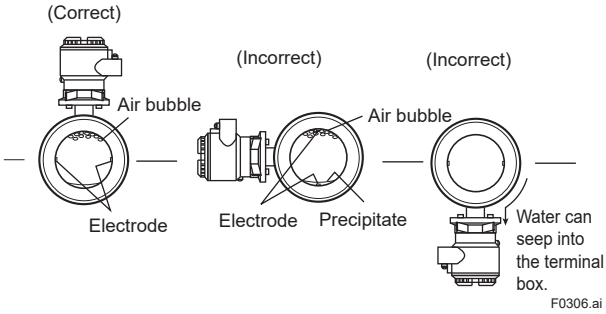

Figure 3.1.6 Mounting Orientation

(10) Counter Flange Material

NOTE

For some specifications of the wafer type flowmeters (see the table), if carbon steel flange is used on the user-side to connect the flowmeter, a measurement error will be added to the guaranteed accuracy in the General Specifications. By setting the correction factor provided from us, it is possible to reduce the added measurement error to around ±0.5%.
For details on setting the correction factor, see section 6.4.

Size	40 mm, 50 mm, 65 mm, 80 mm, 100 mm, 125 mm
Process Connection	A□□: Wafer Type
Lining	A: PFA Lining

* This does not apply to products that include the following specifications.
Gasket for plastic piping (/GA, /GC, /GD)
Size of 40 mm, 50 mm, 65 mm using grounding ring electrode (/GRP, /GRT)

3.2 Handling Precautions

WARNING

The magnetic flowmeter is a heavy product.
Be careful that no damage is caused to personnel through accidentally dropping it, or by exerting excessive force on the magnetic flowmeter. When moving the magnetic flowmeter, always use a trolley and have at least two people carry it.

NOTE

This section describes the remote sensor as an example. The same attention must be paid to the integral flowmeter.

3.2.1 General Precautions

(1) Precaution during Transportation

The magnetic flowmeter is packed tightly. When it is unpacked, pay attention to prevent damaging the flowmeter. To prevent accidents while it is being transported to the installing location, transport it to the site in its original packing.

CAUTION

In order to lift a magnetic flowmeter that is fitted with eyebolts, proceed as in Figure 3.2.1. Never lift it using a bar passed through the sensor as this damages the lining severely.
When lifting the magnetic flowmeter in vertical position, eyebolts (or eyenuts and bolts) are necessary. Attach them to the flange bolt holes, and then lift the magnetic flowmeter.

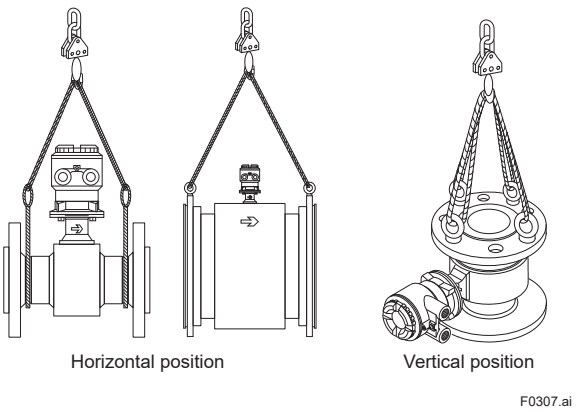

Figure 3.2.1 Lifting Flowmeter

(2) Avoid Shocks from Impact

CAUTION

Care should be taken not to drop the flowmeter or expose it to excessive shock. In particular, be careful not to subject the flange surface to shock. This may lead to lining damage which will result in inaccurate readings.

(3) Flange Protection Covers

IMPORTANT

Keep the protective covering (i.e. the corrugated cardboard or other cushioning material) in place over the flange except when mounting the flowmeter to the pipe.

(4) Terminal Box Cover

IMPORTANT

As it is possible that the insulation will deteriorate, do not open the terminal box cover until it is time to wire it.

(5) Long-term Non-use

IMPORTANT

It is not desirable to leave the flowmeter unused for a long term after installation. If this situation is unavoidable, take care of the flowmeter by observing the following.

- **Confirmation of sealing conditions for the flowmeter**

Confirm that the terminal box screw and cable entries are well sealed. Equip the conduit piping with drain plugs or waterproof glands to prevent moisture or water from penetrating into the flowmeter through the conduit.

- **Regular inspections**

Inspect the sealing conditions as mentioned above, and the inside of the terminal box at least once a year.
Also, due to rain, etc. when it is suspected that water may have penetrated into the inside of the flowmeter, perform supplementary inspections.

3.2.2 Flowmeter Piping

CAUTION

Misaligned or slanted piping can lead to leakage and damage to the flanges.

(1) Correct any misaligned or slanted piping, and any gaps that may exist between mounting flanges before installing the flowmeter (see Figure 3.2.2).

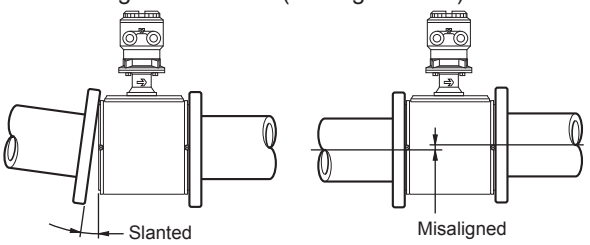

Figure 3.2.2 Slanted and Misaligned Flowmeter Piping

(2) Inside a newly installed pipeline, there may be some foreign substances such as residue from welding or wood chips. Remove them by flushing the piping before mounting the flowmeter. This prevents the lining from being damaged, as well as the occurrence of erroneous measured signals resulting from foreign substances passing through the sensor during measurement.

3.3 Integral Flowmeter and Remote Sensor Installation

WARNING

- All gaskets used for piping of Magnetic Flowmeters should be prepared by customers except in some cases.
  Use the complied gasket for Sanitary standard 3-A in case of optional code 3A.
  For the combination of the PFA lining and the optional specificaiton of grounding ring, no gasket is reguired between the grounding ring and the lining flare section.
  In case of ceramics tube, the gaskets to be used between the grounding ring and the ceramics tube are shipped with products regardless of specifiying optional grounding ring. Be sure to use them. When the gasket for plastic piping is specified (optional code: GA, GC and GD), use the attached gasket as well.
- To avoid damaging the flange surface of the sensor, do not use spiral wound gaskets.

NOTE

- The tightening torque of gaskets varies by the type and external dimensions of the lining and the gasket. The tightening torque values and the corresponding gasket types are indicated in the tables of this section. The dimentions of the gasket used for piping-side flange should be decided by referring to Subsection 3.3.4.
- For fluids capable of potentially permeating PFA linings (such as nitric acid, hydrofluoric acid, or sodium hydrate at high temperatures), different tightening torque values must be applied. The tables of these torque values is indicated in this section.

3.3.1 Size 2.5 to 10 mm (0.1 to 0.4 in.), Union Joint Type

Ceramics linings with diameters of 2.5, 5 or 10 mm (0.1, 0.2 or 0.4 in.) are connected using union joints. Weld or screw the connecting fittings in Figure 3.3.1 onto the piping. The external dimensions of the fittings are shown in Table 3.3.1.

Table 3.3.1 Fitting Dimensions

Screw joint (process connection codes: GUR and GUN)

Unit : mm (approx. inch)

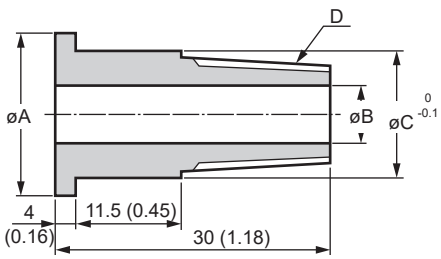

Size	Code	øA	øB	øC	D
2.5 (0.1)	GUR	22 (0.87)	8 (0.31)	18.5 (0.73)	R1/4
	GUN	22 (0.87)	8 (0.31)	18.5 (0.73)	NPT1/4
5 (0.2)	GUR	22 (0.87)	8 (0.31)	18.5 (0.73)	R1/4
	GUN	22 (0.87)	8 (0.31)	18.5 (0.73)	NPT1/4
10 (0.4)	GUR	25 (0.98)	10 (0.39)	22.5 (0.89)	R3/8
	GUN	25 (0.98)	10 (0.39)	22.5 (0.89)	NPT3/8

Weld joint (process connection code: GUW)

Unit : mm (approx. inch)

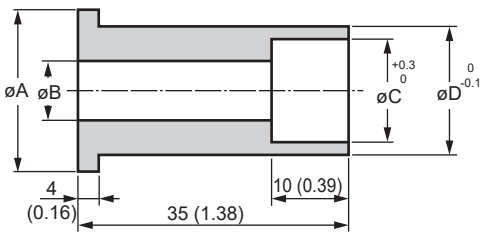

Size	Code	øA	øB	øC	øD
2.5 (0.1)	GUW	22 (0.87)	8 (0.31)	14.3 (0.56)	18.5 (0.73)
5 (0.2)	GUW	22 (0.87)	8 (0.31)	14.3 (0.56)	18.5 (0.73)
10 (0.4)	GUW	25 (0.98)	10 (0.39)	17.8 (0.70)	22.5 (0.89)

(1) Mounting Direction

Mount the flowmeter so that the flow direction of the fluid to be measured is in line with the direction of the arrow mark on the sensor.

IMPORTANT

If it is impossible to match the direction of the arrow mark, the direction of the cable entry can be changed. Read Section 3.5.
In case the fluid being measured flows against the arrow direction, change the value from “Forward” to “Reverse” at the parameter “Flow direct”. Read the user's manual of the applicable communication type (for AXG/AXG4A/AXG1A) or the hardware/software edition (for AXFA11) as listed in Table 1.1.

Display Menu Path (AXG/AXG4A/AXG1A):
Device setup ► Detailed setup ► AUX calculation ► Flow direct

(2) Connecting Process Piping

Weld or screw the connection fittings to the process piping.

IMPORTANT

- Be sure to pass the connection fittings through the union joint nuts in advance.
- When welding the fittings, pay attention to the edge preparation, level differences between the fittings and the piping, and the welding current to avoid deforming the piping or causing stagnation portion of the fluid.

(3) Positioning the Flowmeter

Install the flowmeter on a mounting base and position it so that the center axis of the sensor is aligned with that of the process piping. Then screw the union joint nuts to the connecting ports of the flowmeter.

CAUTION

Ceramics Tube may be damaged if the nuts are tightened while the center axes are not properly aligned.

(4) Tightening Nuts

Use a torque wrench to tighten the union joint nuts according to the applicable torque value in Table 3.3.2 or Table 3.3.3.

CAUTION

For Fluororesin with ceramic fillers gasket (Valqua #7020) (standard) or fluororesin with carbon gasket (optional code GF), tighten the union joint nuts according to the torque values in Table 3.3.2.
For permeable fluid (such as nitric acid, hydrofluoric acid or sodium hydrate at high temperature), tighten the nuts according to the torque values in Table 3.3.3.
In case the gasket material is fluorocarbon resin, the nuts may loosen with the lapse of time. Retighten the nuts with the specified torque value if this is the case. Be sure to use the gasket (thickness is 1.5 mm) attached to the flowmeter.

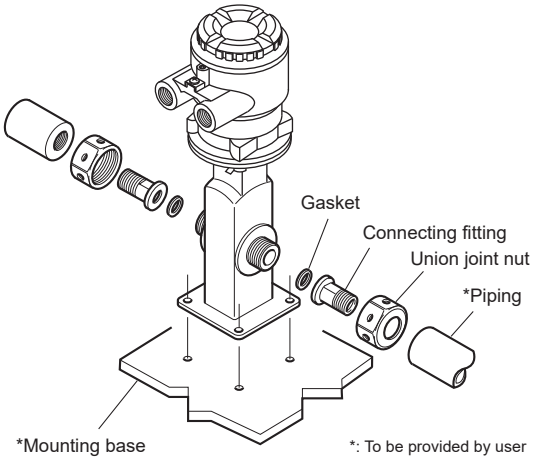

F0311.ai

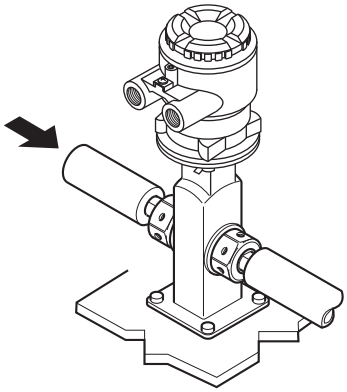

Horizontal mounting

F0312.ai

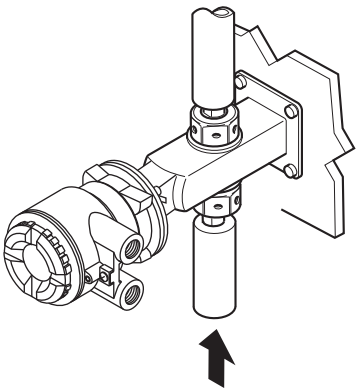

Figure 3.3.1 Mounting Procedure for Union Joint Type (sizes: 2.5 to 10 mm (0.1 to 0.4 in.))

Table 3.3.2 Tightening torque values for Union Joint Type

Size mm (inch)	Torque (N·m / [in·lbf])
2.5 (0.1)	9 to 12 / [79.66 to 106.2]
5 (0.2)	9 to 12 / [79.66 to 106.2]
10 (0.4)	14 to 18 / [123.9 to 159.3]

Table 3.3.3 Tightening torque values for Union Joint Type and Permeable Fluids

Size mm (inch)	Torque (N·m / [in·lbf])
2.5 (0.1)	11 to 15 / [97.36 to 132.8]
5 (0.2)	11 to 15 / [97.36 to 132.8]
10 (0.4)	17 to 23 / [150.5 to 203.6]

3.3.2 Size 2.5 to 200 mm (0.1 to 8 in.), Wafer Type

IMPORTANT

Use bolts and nuts in compliance with the flange ratings. When stud-type through-bolts are used, be sure the outside diameter of the shank is smaller than that of the thread ridge. For 50 mm / 2 in, submersible, JIS 20K, use the two dedicated stud bolts. Be sure to choose a gasket with inner and outer diameters that does not protrude inside the piping (read Subsection 3.3.4). If the inner diameter of the gasket is too large, or outer diameter of the gasket is too small, fluid leakage may result.

IMPORTANT

Ceramics tube is damaged if excessive torsion is applied. Be careful not to apply the torsion to the sensor when connecting pipings near the flowmeter by using pipe thread.

(1) Mounting Direction

Mount the flowmeter so that the flow direction of the fluid to be measured is in line with the direction of the arrow mark on the flowmeter.

IMPORTANT

If it is impossible to match the direction of the arrow mark, the direction of the cable entry can be changed. Read Section 3.5.
In case the fluid being measured flows against the arrow direction, change the value from “Forward” to “Reverse” at the parameter “Flow direct”. Read the user’s manual of the applicable communication type (for AXG/AXG4A/AXG1A) or the hardware/software edition (for AXFA11) as listed in Table 1.1.

Display Menu Path (AXG/AXG4A/AXG1A):
Device setup ► Detailed setup ► AUX calculation ► Flow direct

(2) Mounting Centering Devices

To maintain concentricity of the flowmeter with the pipes, install centering devices. Use the appropriate centering devices according to the nominal diameter and the flange ratings.

- **Size: 2.5 to 40 mm (0.1 to 1.5 in.)**
  Pass two through-bolts through the adjacent holes of both flanges and position the flowmeter so that the Mini-flanges and the centering devices come in close contact with each other.
  In case stud-type through-bolts are used, position them in such a way that the centering devices come in contact with the bolt threads.
  Pass the other through-bolts through the other holes.
  See Figure 3.3.2 and Figure 3.3.3 for the mounting.
- **Size: 50 to 200 mm (2 to 8 in.)**
  From the process piping side, pass two through-bolts through the adjacent two holes (the lower two holes for horizontal mounting) of both of the flanges and the four centering devices (two for each bolt). Be careful to prevent the four centering devices from coming into contact with the sensor housing.
  In case stud-type through-bolts are used, position them in such a way that the four centering devices come in contact with the bolt threads.
  Pass the other through-bolts through the other holes.
  See Figure 3.3.4 for the mounting.

NOTE

For Size 50 to 200 mm (2 to 8 in.), the centering devices are engraved with an identifying character.
Be sure to use the appropriate ones which meet the required specifications by referring to Table 3.3.7 and Table 3.3.8.

(3) Installation of Gasket and Grounding Device

The gaskets (supplied by customer) used for connection with customer pipes differ by the presence or absence of grounding device (grounding ring) and the specifications selected. Paying attention to this point, be sure to use the gaskets in compliance with the flange ratings and fluid specification. Install the gaskets as the followings.
Be sure to choose gaskets with inner and outer diameters that do not protrude inside the piping by referring to Subsection 3.3.4.

- **Installation: PFA lining type and Metal pipe**
  When a magnetic flowmeter with PFA lining is installed to metal pipe without lining, installation method without grounding ring is recommended.
  In the case grounding ring is not used, it is recommended to use no gasket between the pipe and the sensor. With grounding wire (supplied by customer), connect between the pipe and the sensor mini-flange, or between the transmitter and the grounding terminal of terminal box. For grounding in detail, read Subsection 4.4.3.
  In the case grounding ring is used, for gasket A (customer pipe side), be sure to use non-asbestos joint sheet gasket, PTFE-sheathed non-asbestos joint sheet gasket (optional code BSF) or gasket with the equivalent hardness.
  - Installation without grounding ring

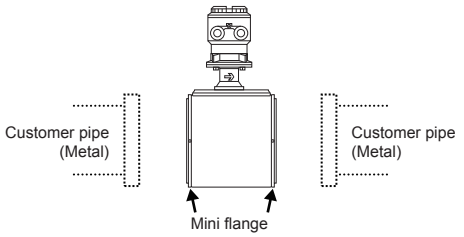

With grounding wire, connect between the pipe and the sensor mini-flange, or between the transmitter and the grounding terminal of terminal box.
F0314.ai

  - Installation with grounding ring

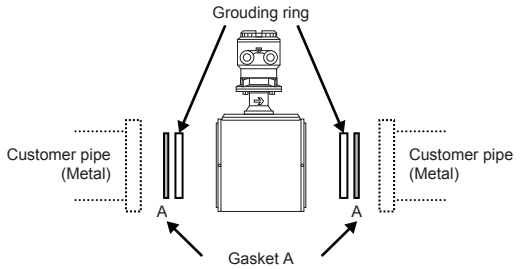

to be supplied by customer or by specified optional code
F0315.ai

- **Installation: PFA lining type and Plastic pipe**
  When a magnetic flowmeter with PFA lining is installed to plastic pipe, be sure to use grounding ring. For gasket A (customer pipe side), use fluororubber gasket, chloroprene rubber gasket (optional code BSC) or gasket with the equivalent hardness. For gasket B (sensor side), use fluororubber gasket (optional code GA, GC or GD) or gasket with the equivalent hardness.
  It is recommended to use gasket with same hardness for gasket A and B.

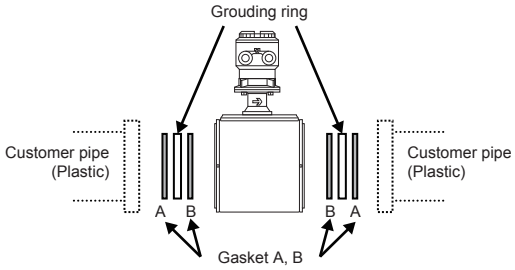

to be supplied by customer or by specified optional code
F0316.ai

- **Installation: Ceramics tube type and Metal pipe**
  When a magnetic flowmeter with Ceramics tube is installed to metal pipe without lining, installation method without grounding ring is recommended.
  In the case grounding ring is not used, with grounding wire (supplied by customer), connect between the pipe and the sensor mini-flange, or between the transmitter and the grounding terminal of terminal box. For grounding in detail, read Subsection 4.4.3.
  In the case grounding ring is used, for gasket A (customer pipe side), be sure to use non-asbestos joint sheet gasket, PTFE-sheathed non-asbestos joint sheet gasket (optional code BSF) or gasket with the equivalent hardness. For gasket B (sensor side), use the attached fluororesin with ceramic fillers gasket (Valqua #7020), fluororesin with carbon gasket (optional code GF), or gasket with equivalent hardness. It is recommended to use gasket with same hardness for gasket A and B.
  - Installation without grounding ring

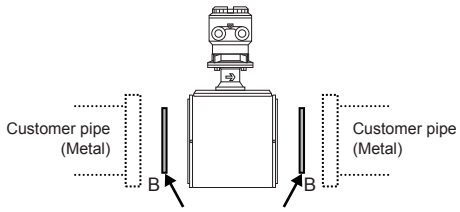

With grounding wire, connect between the pipe and the sensor mini-flange, or between the transmitter and the grounding terminal of terminal box.
Gasket B
to be attached, or to be supplied by specified optional code
F0317.ai

  - Installation with grounding ring

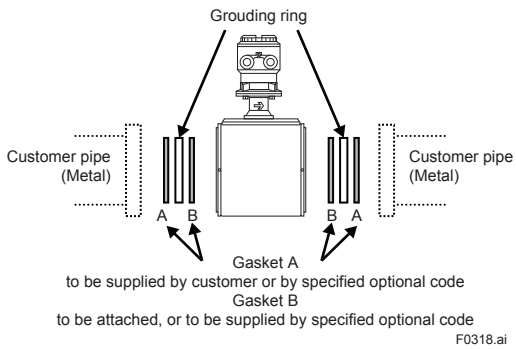

- **Installation: Ceramics tube type and Plastic pipe**
  When a magnetic flowmeter with Ceramics tube is installed to plastic pipe, be sure to use grounding ring. For gasket A (customer pipe side), use fluororubber gasket, chloroprene rubber gasket (optional code BSC) or gasket with the equivalent hardness. For gasket B (sensor side), use fluororubber gasket (optional code GA, GC or GD) or gasket with the equivalent hardness.
  It is recommended to use gasket with same hardness for gasket A and B.

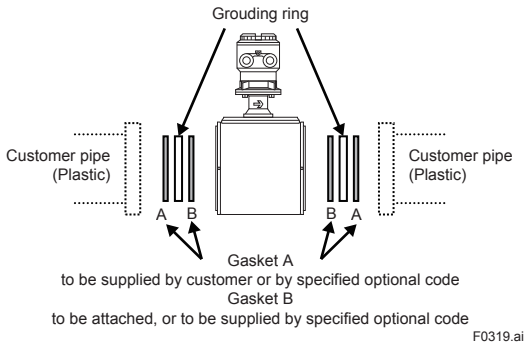

(4) Tightening Nuts

Tighten the nuts according to the torque values for metal piping in Table 3.3.4. For plastic piping, select an optional code of GA, GC, or GD, use rubber gaskets and tighten the nuts to the torque values for plastic piping in Table 3.3.5.
For permeable fluids (such as nitric acid, hydrofluoric acid, or sodium hydrate at high temperatures), tighten the nuts according to the torque values in Table 3.3.6.

CAUTION

For a flowmeter with fluorocarbon PFA lining, it is possible that the nuts may loosen as time passes, so tighten them regularly. Be sure to tighten the nuts according to the prescribed torque values. Tighten them diagonally with the same torque values, step by step up to the prescribed torque value.

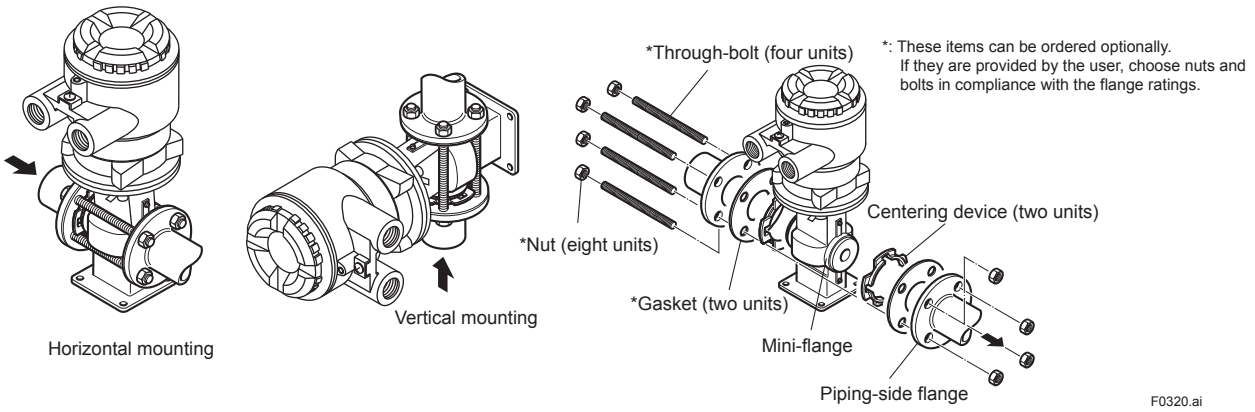

Figure 3.3.2 Mounting Procedure for Wafer Type (sizes: 2.5 to 15 mm (0.1 to 0.5 in.))

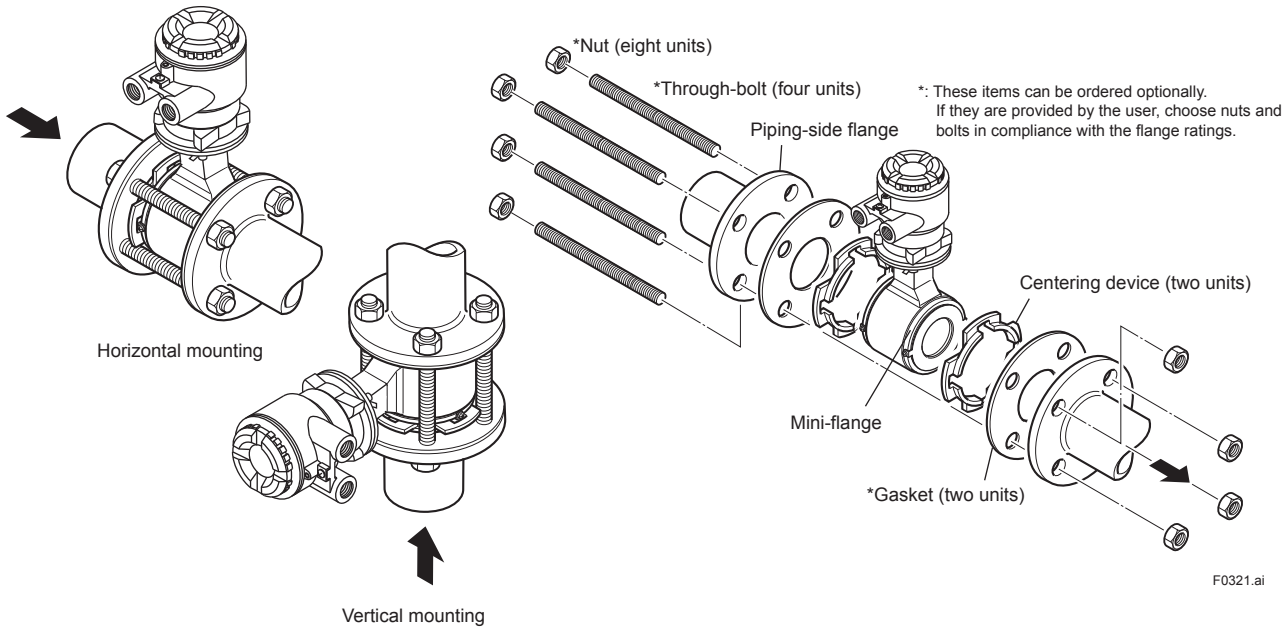

Figure 3.3.3 Mounting Procedure for Wafer Type (sizes: 25 to 40 mm (1 to 1.5 in.))

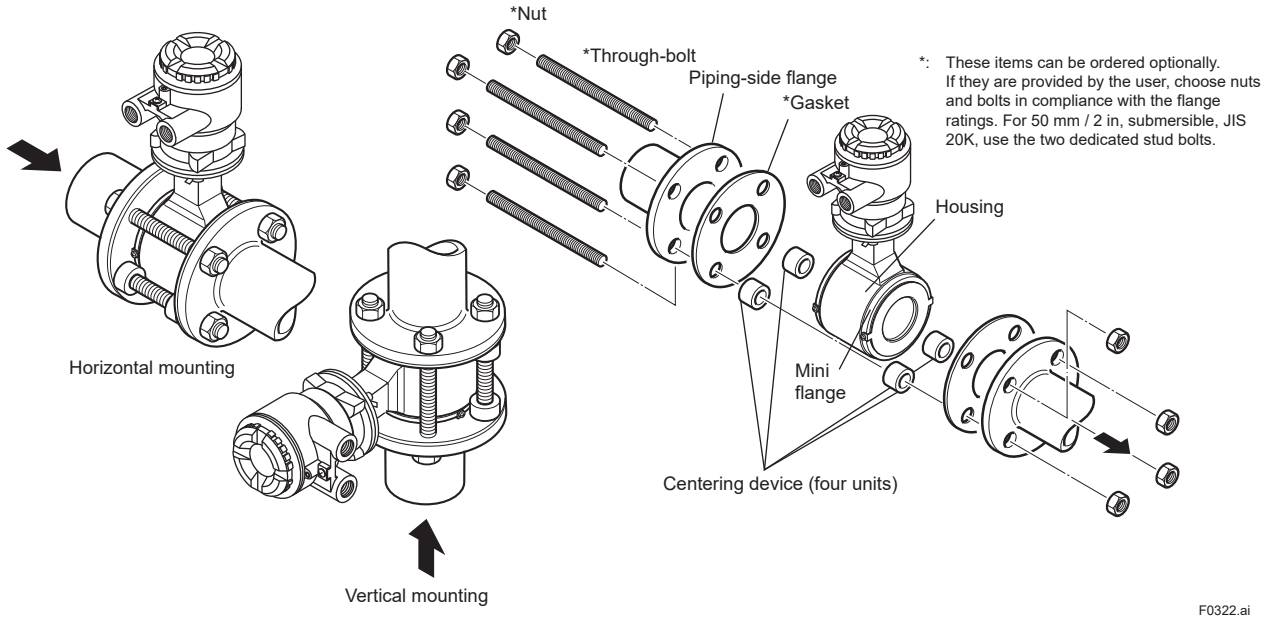

Figure 3.3.4 Mounting Procedure for Wafer Type (sizes: 50 to 200 mm (2 to 8 in.))

Table 3.3.4 Wafer Type Tightening Torque Values for Metal Piping

Tightening torque values for PFA lining (N·m)												
Gasket types within sensor	No gasket (Standard)											
Gasket types for user's flange	Non-asbestos gasket, PTFE-sheathed non-asbestos gasket (Optional code BSF), or the equivalent in hardness											
Flange Rating	JIS 10K	ASME Class 150		EN PN10	JIS 20K	ASME Class 300		EN PN16	EN PN40	JIS F12	JPI Class 150	
Thread Standards / Size mm	Metric screw	Metric screw	Unified screw	Metric screw	Metric screw	Metric screw	Unified screw	Metric screw	Metric screw	Metric screw	Metric screw	Unified screw
2.5	5.8 to 9.5	6.2 to 9.5		—	6.0 to 9.5	6.4 to 9.5		—	6.1 to 9.5	—	6.4 to 10.1	
5	5.8 to 9.5	6.2 to 9.5		—	6.0 to 9.5	6.4 to 9.5		—	6.1 to 9.5	—	6.4 to 10.1	
10	6.0 to 10.0	6.4 to 10.0		—	6.2 to 10.0	6.7 to 10.0		—	5.6 to 8.8	—	6.6 to 10.6	
15	5.3 to 8.8	4.8 to 7.4		—	5.6 to 8.8	5.1 to 7.4		—	4.9 to 7.5	—	5.0 to 7.9	
25	11.3 to 18.4	8.7 to 12.6		—	12.1 to 18.4	11.4 to 16.7		—	9.1 to 12.7	—	8.8 to 13.5	
32	12.6 to 20.5	8.2 to 11.7		—	13.5 to 20.5	10.8 to 15.5		—	10.5 to 15.2	—	—	
40	19.8 to 31.3	14.6 to 20.2		—	21.8 to 31.3	23.5 to 31.9		—	19.7 to 26.7	—	14.9 to 21.9	
50	25.1 to 38.7	22.9 to 33.2		—	13.4 to 19.3	14.4 to 19.8		—	26.8 to 33.8	—	23.0 to 34.3	
65	39.2 to 59.9	36.4 to 51.9		—	19.7 to 30.0	23.2 to 35.5		13.8 to 20.9	—	—	—	
80	21.8 to 33.1	37.6 to 49.2		—	27.8 to 41.4	23.4 to 33.7		15.1 to 21.5	—	44.1 to 66.2	37.6 to 50.5	
100	29.5 to 42.8	24.6 to 31.6		—	38.1 to 53.5	32.3 to 43.2		20.4 to 26.8	—	59.2 to 85.6	24.6 to 32.4	
125	45.9 to 65.6	34.1 to 40.5		—	52.9 to 71.7	37.8 to 46.2		26.1 to 32.0	—	49.5 to 69.9	—	
150	45.4 to 58.9	40.1 to 44.9	39.0 to 43.0	—	33.9 to 43.0	27.8 to 32.7		32.9 to 37.6	—	49.1 to 62.9	43.9 to 48.8	
200	37.1 to 43.3	58.9 to 63.2	57.3 to 61.6	37.5 to 42.1	42.4 to 45.5	42.7 to 45.7	44.3 to 47.2	28.0 to 29.8	—	45.9 to 52.0	59.8 to 65.8	62.1 to 68.3

Tightening torque values for PFA lining [in·lbf]												
Gasket types within sensor	No gasket (Standard)											
Gasket types for user's flange	Non-asbestos gasket, PTFE-sheathed non-asbestos gasket (Optional code BSF), or the equivalent in hardness											
Flange Rating	JIS 10K	ASME Class 150		EN PN10	JIS 20K	ASME Class 300		EN PN16	EN PN40	JIS F12	JPI Class 150	
Thread Standards / Size mm	Metric screw	Metric screw	Unified screw	Metric screw	Metric screw	Metric screw	Unified screw	Metric screw	Metric screw	Metric screw	Metric screw	Unified screw
0.1	51.3 to 84.1	54.9 to 84.1		—	53.1 to 84.1	56.6 to 84.1		—	54.0 to 84.1	—	56.6 to 89.4	
0.2	51.3 to 84.1	54.9 to 84.1		—	53.1 to 84.1	56.6 to 84.1		—	54.0 to 84.1	—	56.6 to 89.4	
0.4	53.1 to 88.5	56.6 to 88.5		—	54.9 to 88.5	59.3 to 88.5		—	49.6 to 77.9	—	58.4 to 93.8	
0.5	46.9 to 77.9	42.5 to 65.5		—	49.6 to 77.9	45.1 to 65.5		—	43.4 to 66.4	—	44.3 to 69.9	
1.0	100.0 to 162.9	77.0 to 111.5		—	107.1 to 162.9	100.9 to 147.8		—	80.5 to 112.4	—	77.9 to 119.5	
1.3	111.5 to 181.4	72.6 to 103.6		—	119.5 to 181.4	95.6 to 137.2		—	92.9 to 134.5	—	—	
1.5	175.2 to 277.0	129.2 to 178.8		—	192.9 to 277.0	208.0 to 282.3		—	174.4 to 236.3	—	131.9 to 193.8	
2.0	222.2 to 342.5	202.7 to 293.8		—	118.6 to 170.8	127.5 to 175.2		—	237.2 to 299.2	—	203.6 to 303.6	
2.5	346.9 to 530.2	322.2 to 459.4		—	174.4 to 265.5	205.3 to 314.2		122.1 to 185.0	—	—	—	
3.0	192.9 to 293.0	332.8 to 435.5		—	246.1 to 366.4	207.1 to 298.3		133.6 to 190.3	—	390.3 to 585.9	332.8 to 447.0	
4.0	261.1 to 378.8	217.7 to 279.7		—	337.2 to 473.5	285.9 to 382.4		180.6 to 237.2	—	524.0 to 757.6	217.7 to 286.8	
5.0	406.2 to 580.6	301.8 to 358.5		—	468.2 to 634.6	334.6 to 408.9		231.0 to 283.2	—	438.1 to 618.7	—	
6.0	401.8 to 521.3	354.9 to 397.4	345.2 to 380.6	—	300.0 to 380.6	246.1 to 289.4		291.2 to 332.8	—	434.6 to 556.7	388.5 to 431.9	
8.0	328.4 to 383.2	521.3 to 559.4	507.1 to 545.2	331.9 to 372.6	375.3 to 402.7	377.9 to 404.5	392.1 to 417.8	247.8 to 263.8	—	406.2 to 460.2	529.3 to 582.4	549.6 to 604.5

Tightening torque values for Ceramics tube (N·m)								
Gasket types within sensor	Fluororesin with ceramic fillers gasket (Valqua #7020) (standard), or fluororesin with carbon gasket (optional code GF)							
Gasket types for user's flange	Non-asbestos gasket, PTFE-sheathed non-asbestos gasket (optional code BSF), or the equivalent in hardness							
Flange Rating / Size mm	JIS 10K	ASME Class 150	EN PN10	JIS 20K	ASME Class 300	EN PN16	EN PN40	JIS F12
15	6.8 to 11.0	6.8 to 11.0	—	6.8 to 11.0	6.8 to 11.0	—	6.6 to 11.0	—
25	18.9 to 24.5	18.9 to 24.5	—	19.1 to 24.5	19.1 to 24.5	—	14.7 to 24.5	—
40	34.5 to 45.7	34.5 to 45.7	—	41.7 to 57.4	41.7 to 57.4	—	34.5 to 57.4	—
50	48.2 to 80.3	48.6 to 81.0	—	23.5 to 39.1	23.7 to 39.5	—	48.2 to 80.3	—
80	31.5 to 52.4	64.2 to 107.0	—	38.8 to 64.7	38.2 to 63.7	31.5 to 52.4	—	63.7 to 106.2
100	36.0 to 59.9	36.3 to 60.4	—	44.3 to 73.8	43.6 to 72.7	36.0 to 59.9	—	73.0 to 121.6
150	75.5 to 125.9	74.4 to 123.9	—	53.4 to 89.1	48.8 to 81.3	75.5 to 125.9	—	82.3 to 137.1
200	72.9 to 121.6	109.1 to 181.8	110.9 to 184.9	79.0 to 131.6	80.0 to 133.3	72.9 to 121.6	—	89.7 to 149.5

Tightening torque values for Ceramics tube [in·lbf]								
Gasket types within sensor	Fluororesin with ceramic fillers gasket (Valqua #7020) (standard), or fluororesin with carbon gasket (optional code GF)							
Gasket types for user's flange	Non-asbestos gasket, PTFE-sheathed non-asbestos gasket (optional code BSF), or the equivalent in hardness							
Flange Rating / Size mm	JIS 10K	ASME Class 150	EN PN10	JIS 20K	ASME Class 300	EN PN16	EN PN40	JIS F12
0.5	60.2 to 97.4	60.2 to 97.4	—	60.2 to 97.4	60.2 to 97.4	—	58.4 to 97.4	—
1.0	167.3 to 216.8	167.3 to 216.8	—	169.0 to 216.8	169.0 to 216.8	—	130.1 to 216.8	—
1.5	305.4 to 404.5	305.4 to 404.5	—	369.1 to 508.0	369.1 to 508.0	—	305.4 to 508.0	—
2.0	426.6 to 710.7	430.1 to 716.9	—	208.0 to 346.1	209.8 to 349.6	—	426.6 to 710.7	—
3.0	278.8 to 463.8	568.2 to 947.0	—	343.4 to 572.6	338.1 to 563.8	278.8 to 463.8	—	563.8 to 939.9
4.0	318.6 to 530.2	321.3 to 534.6	—	392.1 to 653.2	385.9 to 643.4	318.6 to 530.2	—	646.1 to 1076.3
6.0	668.2 to 1114.3	658.5 to 1096.6	—	472.6 to 788.6	431.9 to 719.6	668.2 to 1114.3	—	728.4 to 1213.4
8.0	645.2 to 1076.3	965.6 to 1609.1	981.5 to 1636.5	699.2 to 1164.8	708.1 to 1179.8	645.2 to 1076.3	—	793.9 to 1323.2

Table 3.3.5 Wafer Type Tightening Torque Values for Plastic Piping

Tightening torque values for PFA lining (N·m)												
Gasket types within sensor	Fluororubber gasket (Optional codes GA, GC, or GD)											
Gasket types for user's flange	Fluororubber gasket, chloroprene rubber gasket (Optional code BSC), or the equivalent in hardness											
Flange Rating	JIS 10K	ASME Class 150		EN PN10	JIS 20K	ASME Class 300		EN PN16	EN PN40	JIS F12	JPI Class 150	
Thread Standards / Size mm	Metric screw	Metric screw	Unified screw	Metric screw	Metric screw	Metric screw	Unified screw	Metric screw	Metric screw	Metric screw	Metric screw	Unified screw
2.5	1.7 to 2.9	1.7 to 2.1		—	1.8 to 3.0	1.8 to 2.4		—	1.8 to 3.1	—	1.7 to 2.1	
5	1.7 to 2.9	1.7 to 2.1		—	1.8 to 3.0	1.8 to 2.4		—	1.8 to 3.1	—	1.7 to 2.1	
10	1.8 to 3.0	1.8 to 2.2		—	1.9 to 3.1	1.9 to 2.4		—	1.7 to 2.8	—	1.8 to 2.2	
15	1.6 to 2.6	1.4 to 1.7		—	1.7 to 2.8	1.5 to 1.9		—	1.5 to 2.5	—	1.4 to 1.7	
25	3.4 to 5.6	2.5 to 3.1		—	3.7 to 5.9	3.4 to 4.2		—	2.9 to 4.6	—	3.1 to 5.1	1.9 to 3.1
32	3.8 to 6.3	2.4 to 3.1		—	4.1 to 6.9	3.3 to 4.3		—	3.2 to 5.3	—	—	
40	6.0 to 9.8	4.5 to 5.7		—	7.0 to 11.0	7.3 to 8.8		—	6.4 to 9.9	—	5.3 to 8.9	3.4 to 5.7
50	7.9 to 12.7	7.3 to 9.0		—	4.2 to 6.7	4.4 to 5.2		—	9.2 to 14.1	—	7.1 to 9.1	
65	12.5 to 20.9	11.9 to 15.9		—	6.1 to 10.2	6.9 to 8.5		4.3 to 7.1	—	—	—	
80	6.9 to 11.2	13.3 to 17.7		—	8.7 to 14.1	7.1 to 8.8		4.9 to 7.8	—	14.7 to 23.7	5.6 to 9.3	10.6 to 17.7
100	9.8 to 16.0	8.5 to 11.5		—	12.6 to 20.4	10.2 to 13.4		6.9 to 11.1	—	20.9 to 34.1	8.2 to 11.5	
125	15.3 to 25.5	11.7 to 16.5		—	17.9 to 29.8	12.6 to 18.0		9.4 to 15.7	—	17.6 to 29.4	—	
150	16.0 to 25.8	14.6 to 20.6		—	11.4 to 18.4	9.1 to 12.7		11.6 to 18.6	—	18.9 to 30.7	16.1 to 23.3	
200	13.6 to 21.5	24.6 to 36.2		14.0 to 22.1	16.5 to 25.9	15.4 to 21.9		10.2 to 16.0	—	19.3 to 30.7	14.9 to 24.8	23.7 to 39.5

Tightening torque values for PFA lining (in·lbf)												
Gasket types within sensor	Fluororubber gasket (Optional codes GA, GC, or GD)											
Gasket types for user's flange	Fluororubber gasket, chloroprene rubber gasket (Optional code BSC), or the equivalent in hardness											
Flange Rating	JIS 10K	ASME Class 150		EN PN10	JIS 20K	ASME Class 300		EN PN16	EN PN40	JIS F12	JPI Class 150	
Thread Standards / Size mm	Metric screw	Metric screw	Unified screw	Metric screw	Metric screw	Metric screw	Unified screw	Metric screw	Metric screw	Metric screw	Metric screw	Unified screw
0.1	15.0 to 25.7	15.0 to 18.6		—	15.9 to 26.6	15.9 to 21.2		—	15.9 to 27.4	—	15.0 to 18.6	
0.2	15.0 to 25.7	15.0 to 18.6		—	15.9 to 26.6	15.9 to 21.2		—	15.9 to 27.4	—	15.0 to 18.6	
0.4	15.9 to 26.6	15.9 to 19.5		—	16.8 to 27.4	16.8 to 21.2		—	15.0 to 24.8	—	15.9 to 19.5	
0.5	14.2 to 23.0	12.4 to 15.0		—	15.0 to 24.8	13.3 to 16.8		—	13.3 to 22.1	—	12.4 to 15.0	
1.0	30.1 to 49.6	22.1 to 27.4		—	32.7 to 52.2	30.1 to 37.2		—	25.7 to 40.7	—	27.4 to 45.1	16.8 to 27.4
1.3	33.6 to 55.8	21.2 to 27.4		—	36.3 to 61.1	29.2 to 38.1		—	28.3 to 46.9	—	—	
1.5	53.1 to 86.7	39.8 to 50.4		—	62.0 to 97.4	64.6 to 77.9		—	56.6 to 87.6	—	46.9 to 78.8	30.1 to 50.4
2.0	69.9 to 112.4	64.6 to 79.7		—	37.2 to 59.3	38.9 to 46.0		—	81.4 to 124.8	—	62.8 to 80.5	
2.5	110.6 to 185.0	105.3 to 140.7		—	54.0 to 90.3	61.1 to 75.2		38.1 to 62.8	—	—	—	
3.0	61.1 to 99.1	117.7 to 156.7		—	77.0 to 124.8	62.8 to 77.9		43.4 to 69.0	—	130.1 to 209.8	49.6 to 82.3	93.8 to 156.7
4.0	86.7 to 141.6	75.2 to 101.8		—	111.5 to 180.6	90.3 to 118.6		61.1 to 98.2	—	185.0 to 301.8	72.6 to 101.8	
5.0	135.4 to 225.7	103.6 to 146.0		—	158.4 to 263.8	111.5 to 159.3		83.2 to 139.0	—	155.8 to 260.2	—	
6.0	141.6 to 228.3	129.2 to 182.3		—	100.9 to 162.9	80.5 to 112.4		102.7 to 164.6	—	167.3 to 271.7	142.5 to 206.2	
8.0	120.4 to 190.3	217.7 to 320.4		123.9 to 195.6	146.0 to 229.2	136.3 to 193.8		90.3 to 141.6	—	170.8 to 271.7	131.9 to 219.5	209.8 to 349.6

Tightening torque values for Ceramics tube (N·m)								
Gasket types within sensor	Fluororubber gasket (optional codes GA, GC, and GD)							
Gasket types for user's flange	Fluororubber gasket, chloroprene rubber gasket (optional code BSC), or the equivalent in hardness							
Flange Rating / Size mm	JIS 10K	ASME Class 150	EN PN10	JIS 20K	ASME Class 300	EN PN16	EN PN40	JIS F12
15	0.8 to 1.4	0.8 to 1.4	—	0.8 to 1.4	0.8 to 1.4	—	0.8 to 1.4	—
25	2.3 to 3.1	2.3 to 3.1	—	2.4 to 3.1	2.4 to 3.1	—	1.9 to 3.1	—
40	4.4 to 6.0	4.4 to 6.0	—	5.2 to 7.3	5.2 to 7.3	—	4.4 to 7.3	—
50	6.2 to 10.4	6.3 to 10.5	—	2.9 to 4.9	2.9 to 4.9	—	6.2 to 10.4	—
80	4.4 to 7.3	10.6 to 17.7	—	5.3 to 8.8	5.2 to 8.7	4.4 to 7.3	—	9.6 to 16.0
100	5.2 to 8.6	5.7 to 9.5	—	6.0 to 10.0	6.0 to 10.0	5.2 to 8.6	—	11.7 to 19.5
150	10.7 to 17.8	11.6 to 19.3	—	7.0 to 11.6	6.6 to 11.0	10.7 to 17.8	—	13.3 to 22.2
200	10.2 to 17.1	18.9 to 31.5	18.7 to 31.2	10.6 to 17.7	10.8 to 18.0	10.2 to 17.1	—	15.3 to 25.5

Tightening torque values for Ceramics tube [in·lbf]								
Gasket types within sensor	Fluororubber gasket (optional codes GA, GC, and GD)							
Gasket types for user's flange	Fluororubber gasket, chloroprene rubber gasket (optional code BSC), or the equivalent in hardness							
Flange Rating / Size mm	JIS 10K	ASME Class 150	EN PN10	JIS 20K	ASME Class 300	EN PN16	EN PN40	JIS F12
0.5	7.1 to 12.4	7.1 to 12.4	—	7.1 to 12.4	7.1 to 12.4	—	7.1 to 12.4	—
1.0	20.4 to 27.4	20.4 to 27.4	—	21.2 to 27.4	21.2 to 27.4	—	16.8 to 27.4	—
1.5	38.9 to 53.1	38.9 to 53.1	—	46.0 to 64.6	46.0 to 64.6	—	38.9 to 64.6	—
2.0	54.9 to 92.0	55.8 to 92.9	—	25.7 to 43.4	25.7 to 43.4	—	54.9 to 92.1	—
3.0	38.9 to 64.6	93.8 to 156.7	—	46.9 to 77.9	46.0 to 77.0	38.9 to 64.6	—	85.0 to 141.6
4.0	46.0 to 76.1	50.5 to 84.1	—	53.1 to 88.5	53.1 to 88.5	46.0 to 76.1	—	103.6 to 172.6
6.0	94.7 to 157.5	102.7 to 170.8	—	62.0 to 102.7	58.4 to 97.4	94.7 to 157.5	—	117.7 to 196.5
8.0	90.3 to 151.3	167.3 to 278.8	165.5 to 276.1	93.8 to 156.7	95.6 to 159.3	90.3 to 151.3	—	135.4 to 225.7

Table 3.3.6 Wafer Type Tightening Torque Values for Metal Piping and Permeable Fluids

Tightening torque values for PFA lining (N·m)												
Gasket types within sensor	No gasket (Standard)											
Gasket types for user's flange	Non-asbestos gasket, PTFE-sheathed non-asbestos gasket (Optional code BSF), or the equivalent in hardness											
Flange Rating	JIS 10K	ASME Class 150		EN PN10	JIS 20K	ASME Class 300		EN PN16	EN PN40	JIS F12	JPI Class 150	
Thread Standards / Size mm	Metric screw	Metric screw	Unified screw	Metric screw	Metric screw	Metric screw	Unified screw	Metric screw	Metric screw	Metric screw	Metric screw	Unified screw
2.5	8.6 to 9.5	8.6 to 9.5	9.1 to 10.1	—	8.8 to 9.7	8.9 to 9.7	9.4 to 10.3	—	8.9 to 9.7	—	8.6 to 9.5	9.1 to 10.1
5	8.6 to 9.5	8.6 to 9.5	9.1 to 10.1	—	8.8 to 9.7	8.9 to 9.7	9.4 to 10.3	—	8.9 to 9.7	—	8.6 to 9.5	9.1 to 10.1
10	8.9 to 10.0	9.0 to 10.0	9.5 to 10.6	—	9.2 to 10.1	9.2 to 10.1	9.8 to 10.7	—	8.2 to 9.0	—	9.0 to 10.0	9.5 to 10.6
15	7.9 to 8.8	6.7 to 7.4	7.1 to 7.9	—	8.1 to 8.9	7.0 to 7.7	7.4 to 8.2	—	7.1 to 7.8	—	6.8 to 7.5	7.2 to 7.9
25	16.7 to 18.4	11.9 to 12.9	12.6 to 13.7	—	17.5 to 18.9	16.1 to 17.4	16.3 to 17.6	—	12.8 to 13.7	—	15.2 to 16.8	12.5 to 13.7
32	18.7 to 20.5	11.2 to 12.3	11.8 to 13.0	—	19.5 to 21.5	15.3 to 16.8	15.4 to 16.9	—	15.0 to 16.5	—	—	—
40	29.0 to 31.6	19.8 to 21.5	20.9 to 22.7	—	31.0 to 33.5	33.3 to 35.8	32.1 to 34.6	—	27.5 to 29.6	—	25.4 to 28.0	20.9 to 23.0
50	36.5 to 39.7	32.5 to 35.2	32.7 to 35.4	—	19.1 to 20.6	20.5 to 22.0	19.8 to 21.3	—	36.7 to 39.3	—	32.9 to 36.2	33.1 to 36.4
65	56.8 to 62.5	51.4 to 56.5	51.7 to 56.8	—	28.5 to 31.4	33.2 to 36.5	33.8 to 37.2	20.0 to 22.0	—	—	—	—
80	31.5 to 34.4	51.8 to 56.3	52.1 to 56.7	—	40.0 to 43.5	32.9 to 35.7	33.5 to 36.4	21.4 to 23.2	—	63.5 to 69.5	25.0 to 27.5	52.4 to 57.7
100	42.1 to 46.0	33.6 to 36.6	33.9 to 36.9	—	53.8 to 58.7	44.3 to 48.3	45.2 to 49.1	28.3 to 30.8	—	84.4 to 92.5	33.9 to 37.3	34.1 to 37.6
125	65.2 to 71.7	46.5 to 51.2	45.0 to 49.5	—	74.0 to 81.4	50.7 to 55.8	51.7 to 56.8	35.5 to 39.1	—	70.0 to 77.0	—	—
150	62.7 to 68.4	53.3 to 57.8	51.7 to 56.1	—	46.6 to 50.6	36.9 to 40.0	37.6 to 40.8	43.9 to 47.6	—	67.5 to 73.9	61.0 to 67.1	59.0 to 64.9
200	49.8 to 53.9	75.1 to 81.0	72.8 to 78.6	49.9 to 54.0	55.1 to 59.5	55.7 to 59.9	57.9 to 62.3	36.2 to 38.9	—	61.1 to 66.6	52.9 to 58.2	80.4 to 88.4

Tightening torque values for PFA lining [in·lbf]												
Gasket types within sensor	No gasket (Standard)											
Gasket types for user's flange	Non-asbestos gasket, PTFE-sheathed non-asbestos gasket (Optional code BSF), or the equivalent in hardness											
Flange Rating	JIS 10K	ASME Class 150		EN PN10	JIS 20K	ASME Class 300		EN PN16	EN PN40	JIS F12	JPI Class 150	
Thread Standards / Size mm	Metric screw	Metric screw	Unified screw	Metric screw	Metric screw	Metric screw	Unified screw	Metric screw	Metric screw	Metric screw	Metric screw	Unified screw
0.1	76.1 to 84.1	76.1 to 84.1	80.5 to 89.4	—	77.9 to 85.9	78.8 to 85.9	83.2 to 91.2	—	78.8 to 85.9	—	76.1 to 84.1	80.5 to 89.4
0.2	76.1 to 84.1	76.1 to 84.1	80.5 to 89.4	—	77.9 to 85.9	78.8 to 85.9	83.2 to 91.2	—	78.8 to 85.9	—	76.1 to 84.1	80.5 to 89.4
0.4	78.8 to 88.5	79.7 to 88.5	84.1 to 93.8	—	81.4 to 89.4	81.4 to 89.4	86.7 to 94.7	—	72.6 to 79.7	—	79.7 to 88.5	84.1 to 93.8
0.5	69.9 to 77.9	59.3 to 65.5	62.8 to 69.9	—	71.7 to 78.8	62.0 to 68.2	65.5 to 72.6	—	62.8 to 69.0	—	60.2 to 66.4	63.7 to 69.9
1.0	147.8 to 162.9	105.3 to 114.2	111.5 to 121.3	—	154.9 to 167.3	142.5 to 154.0	144.3 to 155.8	—	113.3 to 121.3	—	134.5 to 148.7	110.6 to 121.3
1.3	165.5 to 181.4	99.1 to 108.9	104.4 to 115.1	—	172.6 to 190.3	135.4 to 148.7	136.3 to 149.6	—	132.8 to 146.0	—	—	—
1.5	256.7 to 279.7	175.2 to 190.3	185.0 to 200.9	—	274.4 to 296.5	294.7 to 316.9	284.1 to 306.2	—	243.4 to 262.0	—	224.8 to 247.8	185.0 to 203.6
2.0	323.1 to 351.4	287.6 to 311.5	289.4 to 313.3	—	169.0 to 182.3	181.4 to 194.7	175.2 to 188.5	—	324.8 to 347.8	—	291.2 to 320.4	293.0 to 322.2
2.5	502.7 to 553.2	454.9 to 500.1	457.6 to 502.7	—	252.2 to 277.9	293.8 to 323.1	299.2 to 329.2	177.0 to 194.7	—	—	—	—
3.0	278.8 to 304.5	458.5 to 498.3	461.1 to 501.8	—	354.0 to 385.0	291.2 to 316.0	296.5 to 322.2	189.4 to 205.3	—	562.0 to 615.1	221.3 to 243.4	463.8 to 510.7
4.0	372.6 to 407.1	297.4 to 323.9	300.0 to 326.6	—	476.2 to 519.5	392.1 to 427.5	400.1 to 434.6	250.5 to 272.6	—	747.0 to 818.7	300.0 to 330.1	301.8 to 332.8
5.0	577.1 to 634.6	411.6 to 453.2	398.3 to 438.1	—	655.0 to 720.5	448.7 to 493.9	457.6 to 502.7	314.2 to 346.1	—	619.6 to 681.5	—	—
6.0	554.9 to 605.4	471.7 to 511.6	457.6 to 496.5	—	412.4 to 447.8	326.6 to 354.0	332.8 to 361.1	388.5 to 421.3	—	597.4 to 654.1	539.9 to 593.9	522.2 to 574.4
8.0	440.8 to 477.1	664.7 to 716.9	644.3 to 695.7	441.7 to 477.9	487.7 to 526.6	493.0 to 530.2	512.5 to 551.4	320.4 to 344.3	—	540.8 to 589.5	468.2 to 515.1	711.6 to 782.4

Tightening torque values for Ceramics tube (N·m)								
Gasket types within sensor	Fluororesin with ceramic fillers gasket (Valqua #7020) (standard), or fluororesin with carbon gasket (optional code GF)							
Gasket types for user's flange	PTFE-sheathed non-asbestos gasket (optional code BSF), or the equivalent in hardness							
Flange Rating / Size mm	JIS 10K	ASME Class 150	EN PN10	JIS 20K	ASME Class 300	EN PN16	EN PN40	JIS F12
15	8.1 to 13.1	8.1 to 13.1	—	8.1 to 13.1	8.1 to 13.1	—	7.9 to 13.1	—
25	22.5 to 29.0	22.5 to 29.0	—	22.7 to 29.0	22.7 to 29.0	—	17.4 to 29.0	—
40	40.6 to 53.8	40.6 to 53.8	—	49.3 to 67.7	49.3 to 67.7	—	40.6 to 67.7	—
50	56.5 to 94.2	57.0 to 95.0	—	27.7 to 46.1	27.9 to 46.5	—	56.5 to 94.2	—
80	37.3 to 62.2	76.0 to 126.7	—	46.2 to 77.0	45.4 to 75.7	37.3 to 62.2	—	75.5 to 125.8
100	42.2 to 70.3	42.5 to 70.8	—	52.0 to 86.7	51.2 to 85.3	42.2 to 70.3	—	85.4 to 142.3
150	87.8 to 146.4	86.4 to 144.0	—	62.4 to 104.0	56.8 to 94.7	87.8 to 146.4	—	95.4 to 159.0
200	84.0 to 140.1	125.4 to 209.1	127.6 to 212.7	91.1 to 151.9	92.3 to 153.8	84.0 to 140.1	—	103.0 to 171.7

Tightening torque values for Ceramics tube [in·lbf]								
Gasket types within sensor	Fluororesin with ceramic fillers gasket (Valqua #7020) (standard), or fluororesin with carbon gasket (optional code GF)							
Gasket types for user's flange	PTFE-sheathed non-asbestos gasket (optional code BSF), or the equivalent in hardness							
Flange Rating / Size mm	JIS 10K	ASME Class 150	EN PN10	JIS 20K	ASME Class 300	EN PN16	EN PN40	JIS F12
0.5	71.7 to 115.9	71.7 to 115.9	—	71.7 to 115.9	71.7 to 115.9	—	69.9 to 115.9	—
1.0	199.1 to 256.7	199.1 to 256.7	—	200.9 to 256.7	200.9 to 256.7	—	154.0 to 256.7	—
1.5	359.3 to 476.2	359.3 to 476.2	—	436.3 to 599.2	436.3 to 599.2	—	359.3 to 599.2	—
2.0	500.1 to 833.7	504.5 to 840.8	—	245.2 to 408.0	246.9 to 411.6	—	500.1 to 833.7	—
3.0	330.1 to 550.5	672.7 to 1121.4	—	408.9 to 681.5	401.8 to 670.0	330.1 to 550.5	—	668.2 to 1113.4
4.0	373.5 to 622.2	376.2 to 626.6	—	460.2 to 767.4	453.2 to 755.0	373.5 to 622.2	—	755.9 to 1259.5
6.0	777.1 to 1295.7	764.7 to 1274.5	—	552.3 to 920.5	502.7 to 838.2	777.1 to 1295.7	—	844.4 to 1407.3
8.0	743.5 to 1240.0	1109.9 to 1850.7	1129.4 to 1882.6	806.3 to 1344.4	816.9 to 1361.2	743.5 to 1240.0	—	911.6 to 1519.7

Table 3.3.7 Centering Device Identification (PFA lining)

Flange Rating / Size mm (inch)	JIS			ASME		EN			JPI
	10K	20K	F12	Class 150	Class 300	PN10	PN16	PN40	Class 150
50 (2.0)	B	B	—	B	F	—	—	F	B
65 (2.5)	B	B	—	B	G	—	F	—	—
80 (3.0)	B	F	H	F	C	—	G	—	F
100 (4.0)	B	F	H	C	H	—	F	—	C
125 (5.0)	B	C	C	G	D	—	F	—	—
150 (6.0)	C	D	D	C	E	—	C	—	C
200 (8.0)	C	D	D	D	E	C	C	—	D

*: Each centering device is engraved with a character as identification.

Table 3.3.8 Centering Device Identification (Ceramics tube)

Flange Rating / Size mm (inch)	JIS			ASME		EN		
	10K	20K	F12	Class 150	Class 300	PN10	PN16	PN40
50 (2.0)	B	B	—	B	F	—	—	F
80 (3.0)	B	F	H	F	C	—	G	—
100 (4.0)	B	F	H	C	H	—	F	—
150 (6.0)	B	C	G	B	D	—	B	—
200 (8.0)	B	C	C	G	J	B	B	—

*: Each centering device is engraved with a character as identification.

3.3.3 Size 2.5 to 500 mm (0.1 to 20 in.), Flange Type

IMPORTANT

Use bolts and nuts in compliance with the flange ratings. Be sure to choose a gasket with inner and outer diameters that does not protrude inside the piping (read Subsection 3.3.4). If the inner diameter of the gasket is too large, or outer diameter of the gasket is too small, fluid leakage may result.

(1) Mounting Direction

Mount the flowmeter so that the flow direction of the fluid to be measured is in line with the direction of the arrow mark on the flowmeter.

IMPORTANT

If it is impossible to match the direction of the arrow mark, the direction of the cable entry can be changed. Read Section 3.5.
In case the fluid being measured flows against the arrow direction, change the value from “Forward” to “Reverse” at the parameter “Flow direct”. Read the user's manual of the applicable communication type (for AXG/AXG4A/AXG1A) or the hardware/software edition (for AXFA11) as listed in Table 1.1.

Display Menu Path (AXG/AXG4A/AXG1A):
Device setup ▶ Detailed setup ▶ AUX calculation ▶ Flow direct

(2) Installation of Gasket and Grounding Device

The gaskets (supplied by customer) used for connection with customer pipes differ by the presence or absence of grounding device (grounding ring, built-in grounding electrode) and the specified specifications. Paying attention to this point, be sure to use the gaskets in compliance with the flange ratings and fluid specification. Install the gaskets as the followings.
Be sure to choose gaskets with inner and outer diameters that do not protrude inside the piping by referring to Subsection 3.3.4.

- **Installation: PFA lining type and Metal pipe**
  When a magnetic flowmeter with PFA lining is installed to metal pipe without lining, the installation method without grounding ring, or with built-in grounding electrode is recommended.
  For both methods (without grounding ring and with built-in grounding electrode), it is recommended to use no gasket between the pipe and the sensor.
  With grounding wire (supplied by customer), connect between the pipe and the sensor flange, or between the transmitter and the grounding terminal of terminal box. For grounding in detail, read Subsection 4.4.3.
  When built-in grounding electrode is used, the decreased seal portion provides the prevention of fluid leakage.
  In the case grounding ring is used, for gasket A (customer pipe side), be sure to use non-asbestos joint sheet gasket, PTFE-sheathed non-asbestos joint sheet gasket or gasket with the equivalent hardness.
  - Installation without grounding ring or with built-in grounding electrode

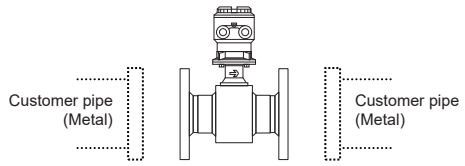

With grounding wire, connect between the pipe and the sensor flange, or between the transmitter and the grounding terminal of terminal box.
F0323.ai

  - Installation with grounding ring

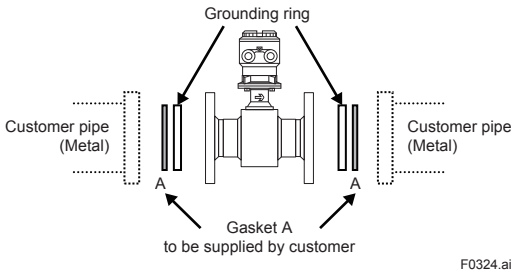

F0324.ai

- **Installation: PFA lining type and Plastic pipe**
  When a magnetic flowmeter with PFA lining is installed to plastic pipe, be sure to use grounding rings or to choose the built-in grounding electrode specification.
  In the case grounding ring is used, for gasket A (customer pipe side), use fluororubber gasket, chloroprene rubber gasket or gasket with the equivalent hardness. For gasket B (sensor side), use fluororubber gasket (optional code GA, GC or GD) or gasket with the equivalent hardness.
  It is recommended to use gasket with same hardness for gasket A and B.
  - Installation with grounding ring

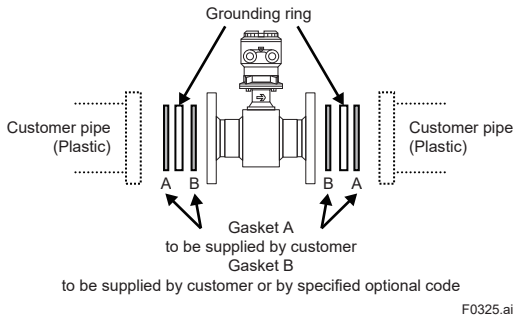

  - Installation with built-in grounding electrode

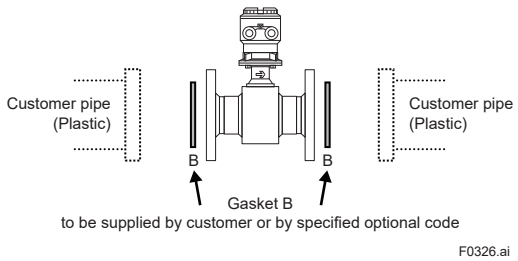

(3) Tightening Nuts

Tighten the nuts according to the torque values for the metal piping in Table 3.3.10. For plastic piping, using the gaskets for plastic piping (optional code GA, GC or GD), tighten the nuts according to the torque values in Table 3.3.11.
For permeable fluids (such as nitric acid, hydrofluoric acid, or sodium hydrate at high temperatures), tighten the nuts according to the torque values in Table 3.3.12.

CAUTION

For a flowmeter with fluorocarbon PFA lining, it is possible that the nuts may loosen as time passes, so tighten them regularly. Be sure to tighten the nuts according to the prescribed torque values. Tighten them diagonally with the same torque values, step by step up to the prescribed torque value.

(4) High pressure type (ASME Class 600)

The structure of grounding ring and flange, and the dimensions of inner and outer diameter are as shown below.

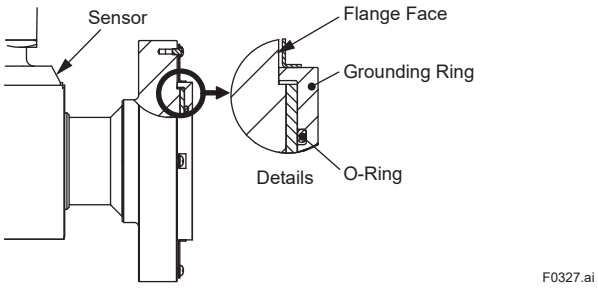

Table 3.3.9 Dimensions of Grounding Rings for High Pressure Type (ASME Class 600)

Unit: mm (approx. in.)

Size	Outer diameter	Inner diameter
25 (1)	69 (2.72)	29.0 (1.14)
40 (1.5)	92 (3.62)	35.4 (1.39)
50 (2)	108 (4.25)	46.5 (1.83)
80 (3)	147 (5.79)	70.9 (2.79)
100 (4)	185 (7.28)	93.0 (3.66)

NOTE

- For high pressure type (ASME Class 600), be sure to use the grounding rings and O-rings which are attached to product. After installing the sensor, check if the grounding ring and the flange face fit closely.
- For high pressure type (ASME Class 600), be sure to use flat gaskets matching to the inner and outer diameter of grounding ring prescribed in Table 3.3.9. Do not use spiral wound gaskets.
- Be careful that over tightening of the bolts results in damage to the flange face of the sensor.

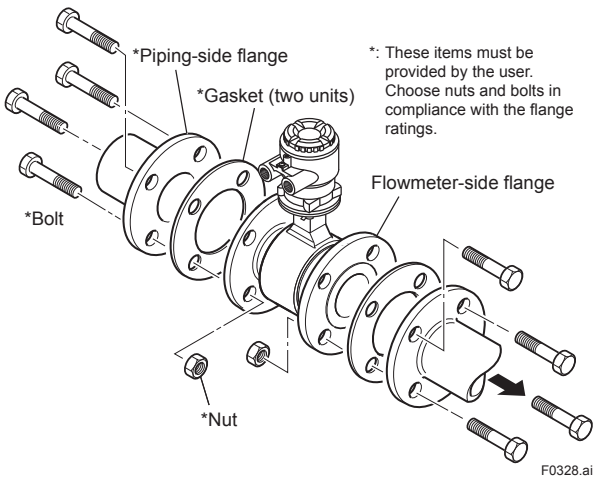

Figure 3.3.5 Mounting Procedure for Flange Type (sizes: 2.5 to 500 mm (0.1 to 20 in.))

Table 3.3.10 Flange Type Tightening Torque Values for Metal Piping

Tightening torque values for PFA lining (N·m)																	
Gasket types within sensor	No gasket (Standard)																
Gasket types for user's flange	Non-asbestos gasket, PTFE-sheathed non-asbestos gasket, or the equivalent in hardness																
Flange Rating	JIS 10K	ASME Class 150		EN PN10	JIS 20K	ASME Class 300		EN PN16	EN PN25	EN PN40	JIS F12	JPI Class 150		AS Table D		AS Table E	
Thread Standards / Size mm	Metric screw	Metric screw	Unified screw	Metric screw	Metric screw	Metric screw	Unified screw	Metric screw	Metric screw	Metric screw	Metric screw	Metric screw	Unified screw	Metric screw	Unified screw	Metric screw	Unified screw
2.5 (with 10mm flanges)	2.7 to 4.4	3.3 to 5.2		—	3.2 to 5.3	3.4 to 5.3		—	—	2.7 to 4.5	—	3.4 to 5.5		—		—	
2.5 (with 15mm flanges)	3.1 to 5.1	3.2 to 5.1		—	3.1 to 5.2	3.3 to 5.1		—	—	3.2 to 5.2	—	3.4 to 5.5		—		—	
5 (with 10mm flanges)	2.7 to 4.4	3.3 to 5.2		—	3.2 to 5.3	3.4 to 5.3		—	—	2.7 to 4.5	—	3.4 to 5.5		—		—	
5 (with 15mm flanges)	3.1 to 5.1	3.2 to 5.1		—	3.1 to 5.2	3.3 to 5.1		—	—	3.2 to 5.2	—	3.4 to 5.5		—		—	
10 (with 10mm flanges)	2.7 to 4.4	3.3 to 5.2		—	3.2 to 5.3	3.4 to 5.3		—	—	2.7 to 4.5	—	3.4 to 5.5		—		—	
10 (with 15mm flanges)	3.1 to 5.1	3.2 to 5.1		—	3.1 to 5.2	3.3 to 5.1		—	—	3.2 to 5.2	—	3.4 to 5.5		—		—	
15	3.1 to 5.1	3.2 to 5.1		—	3.1 to 5.2	3.3 to 5.1		—	—	3.2 to 5.2	—	3.4 to 5.5		—		—	
25	10.3 to 17.2	8.5 to 13.1		—	10.6 to 17.2	11.1 to 17.8		—	—	8.4 to 13.1	—	8.7 to 13.9		—		—	
32	15.5 to 25.7	11.6 to 17.7		—	16.1 to 25.7	15.0 to 23.3		—	—	14.7 to 23.0	—	—		—		—	
40	18.0 to 29.7	14.3 to 21.4		—	19.0 to 29.7	22.3 to 33.7		—	—	18.4 to 28.2	—	14.9 to 23.1		—		—	
50	27.0 to 43.8	26.6 to 42.1		—	13.8 to 21.9	13.7 to 21.0		—	—	29.1 to 42.7	—	27.3 to 43.2		26.7 to 44.2		27.5 to 44.2	
65	41.6 to 66.6	40.9 to 62.8		—	20.7 to 33.3	24.2 to 37.5		16.3 to 26.3	—	—	—	—		—		—	
80	22.2 to 36.0	41.4 to 61.3		—	28.0 to 45.1	24.1 to 36.6		17.3 to 27.5	22.6 to 35.0	—	45.3 to 72.1	42.1 to 62.5		39.8 to 64.6		41.6 to 64.6	
100	28.9 to 45.8	27.0 to 40.5		—	37.9 to 59.1	33.2 to 48.4		23.2 to 35.7	36.4 to 56.1	—	61.0 to 94.6	27.5 to 41.3		53.5 to 85.1		27.4 to 42.6	
125	47.1 to 74.4	39.5 to 57.1		—	53.2 to 81.4	41.2 to 57.1		31.0 to 45.9	55.7 to 85.2	—	51.7 to 79.4	—		—		—	
150	70.4 to 108.0	64.4 to 89.7		—	65.3 to 92.7	58.9 to 72.1		58.0 to 86.4	88.9 to 126.7	—	77.1 to 115.2	70.0 to 98.2		50.2 to 79.2		64.8 to 94.7	
200	55.8 to 84.1	86.4 to 111.2		69.1 to 103.2	95.7 to 124.4	101.1 to 117.2		47.3 to 68.8	85.1 to 118.2	—	70.1 to 100.9	92.8 to 120.6		64.4 to 98.4		85.3 to 117.7	
250	95.0 to 139.9	91.6 to 122.3		68.2 to 100.8	140.3 to 193.9	100.3 to 131.0		84.6 to 120.9	128.5 to 180.1	—	134.0 to 192.0	114.4 to 153.6		117.6 to 171.6		83.4 to 114.4	
300	76.8 to 111.6	104.5 to 130.0		72.4 to 102.3	143.8 to 195.8	158.8 to 201.5		91.6 to 122.8	133.6 to 184.8	—	117.3 to 163.3	129.2 to 163.3		84.6 to 122.7		114.8 to 153.9	
350	117.2 to 167.8	170.9 to 210.2		82.4 to 117.7	—	—		—	203.4 to 286.5	—	190.1 to 268.4	190.0 to 239.1		153.6 to 223.3		—	
400	178.3 to 251.4	174.6 to 221.1		141.1 to 203.4	—	—		—	281.1 to 400.0	—	217.2 to 305.4	195.3 to 252.1		217.1 to 311.9		—	
500	—	192.3 to 256.9		202.7 to 290.7	—	—		243.2 to 377.0	—	—	—	—		—		—	

Note: When the process connection code EA4 (ASME Class 600) is selected, tighten the bolts to the torque value in accordance with the specifications of the gasket to use.

Tightening torque values for PFA lining (in·lbf)																	
Gasket types within sensor	No gasket (Standard)																
Gasket types for user's flange	Non-asbestos gasket, PTFE-sheathed non-asbestos gasket, or the equivalent in hardness																
Flange Rating	JIS 10K	ASME Class 150		EN PN10	JIS 20K	ASME Class 300		EN PN16	EN PN25	EN PN40	JIS F12	JPI Class 150		AS Table D		AS Table E	
Thread Standards / Size inch	Metric screw	Metric screw	Unified screw	Metric screw	Metric screw	Metric screw	Unified screw	Metric screw	Metric screw	Metric screw	Metric screw	Metric screw	Unified screw	Metric screw	Unified screw	Metric screw	Unified screw
0.1 (with 0.4 inch flanges)	23.9 to 38.9	29.2 to 46.0		—	28.3 to 46.9	30.1 to 46.9		—	—	23.9 to 39.8	—	30.1 to 48.7		—		—	
0.1 (with 0.5 inch flanges)	27.4 to 45.1	28.3 to 45.1		—	27.4 to 46.0	29.2 to 45.1		—	—	28.3 to 46.0	—	30.1 to 48.7		—		—	
0.2 (with 0.4 inch flanges)	23.9 to 38.9	29.2 to 46.0		—	28.3 to 46.9	30.1 to 46.9		—	—	23.9 to 39.8	—	30.1 to 48.7		—		—	
0.2 (with 0.5 inch flanges)	27.4 to 45.1	28.3 to 45.1		—	27.4 to 46.0	29.2 to 45.1		—	—	28.3 to 46.0	—	30.1 to 48.7		—		—	
0.4 (with 0.4 inch flanges)	23.9 to 38.9	29.2 to 46.0		—	28.3 to 46.9	30.1 to 46.9		—	—	23.9 to 39.8	—	30.1 to 48.7		—		—	
0.4 (with 0.5 inch flanges)	27.4 to 45.1	28.3 to 45.1		—	27.4 to 46.0	29.2 to 45.1		—	—	28.3 to 46.0	—	30.1 to 48.7		—		—	
0.5	27.4 to 45.1	28.3 to 45.1		—	27.4 to 46.0	29.2 to 45.1		—	—	28.3 to 46.0	—	30.1 to 48.7		—		—	
1.0	91.2 to 152.2	75.2 to 115.9		—	93.8 to 152.2	98.2 to 157.5		—	—	74.3 to 115.9	—	77.0 to 123.0		—		—	
1.3	137.2 to 227.5	102.7 to 156.7		—	142.5 to 227.5	132.8 to 206.2		—	—	130.1 to 203.6	—	—		—		—	
1.5	159.3 to 262.9	126.6 to 189.4		—	168.2 to 262.9	197.4 to 298.3		—	—	162.9 to 249.6	—	131.9 to 204.5		—		—	
2.0	239.0 to 387.7	235.4 to 372.6		—	122.1 to 193.8	121.3 to 185.9		—	—	257.6 to 377.9	—	241.6 to 382.4		236.3 to 391.2		243.4 to 391.2	
2.5	368.2 to 589.5	362.0 to 555.8		—	183.2 to 294.7	214.2 to 331.9		144.3 to 232.8	—	—	—	—		—		—	
3.0	196.5 to 318.6	366.4 to 542.6		—	247.8 to 399.2	213.3 to 323.9		153.1 to 243.4	200.0 to 309.8	—	400.9 to 638.1	372.6 to 553.2		352.3 to 571.8		368.2 to 571.8	
4.0	255.8 to 405.4	239.0 to 358.5		—	335.4 to 523.1	293.8 to 428.4		205.3 to 316.0	322.2 to 496.5	—	539.9 to 837.3	243.4 to 365.5		473.5 to 753.2		242.5 to 377.0	
5.0	416.9 to 658.5	349.6 to 505.4		—	470.9 to 720.5	364.7 to 505.4		274.4 to 406.2	493.0 to 754.1	—	457.6 to 702.7	—		—		—	
6.0	623.1 to 955.9	570.0 to 793.9		—	578.0 to 820.5	521.3 to 638.1		513.3 to 764.7	786.8 to 1121.4	—	682.4 to 1019.6	619.6 to 869.1		444.3 to 701.0		573.5 to 838.2	
8.0	493.9 to 744.3	764.7 to 984.2		611.6 to 913.4	847.0 to 1101.0	894.8 to 1037.3		418.6 to 608.9	753.2 to 1046.2	—	620.4 to 893.0	821.3 to 1067.4		570.0 to 870.9		755.0 to 1041.7	
10	840.8 to 1238.2	810.7 to 1082.4		603.6 to 892.2	1241.8 to 1716.2	887.7 to 1159.4		748.8 to 1070.1	1137.3 to 1594.0	—	1186.0 to 1699.3	1012.5 to 1359.5		1040.8 to 1518.8		738.2 to 1012.5	
12	679.7 to 987.7	924.9 to 1150.6		640.8 to 905.4	1272.7 to 1733.0	1405.5 to 1783.4		810.7 to 1086.9	1182.5 to 1635.6	—	1038.2 to 1445.3	1143.5 to 1445.3		748.8 to 1086.0		1016.1 to 1362.1	
14	1037.3 to 1485.2	1512.6 to 1860.4		729.3 to 1041.7	—	—		–	1800.2 to 2535.7	—	1682.5 to 2375.5	1681.6 to 2116.2		1359.5 to 1976.4		—	
16	1578.1 to 2225.1	1545.3 to 1956.9		1248.8 to 1800.2	—	—		–	2487.9 to 3540.3	—	1922.4 to 2703.0	1728.6 to 2231.3		1921.5 to 2760.5		—	
20	—	1702.0 to 2273.8		1794.0 to 2572.9	—	—		2152.5 to 3336.7	—	—	—	—		—		—	

Note: When the process connection code EA4 (ASME Class 600) is selected, tighten the bolts to the torque value in accordance with the specifications of the gasket to use.

Table 3.3.11 Flange Type Tightening Torque Values for Plastic Piping

Tightening torque values for PFA lining (N·m)																	
Gasket types within sensor	Fluororubber gasket (Optional codes GA, GC, or GD)																
Gasket types for user's flange	Fluororubber gasket, chloroprene rubber gasket, or the equivalent in hardness																
Flange Rating	JIS 10K	ASME Class 150		EN PN10	JIS 20K	ASME Class 300		EN PN16	EN PN25	EN PN40	JIS F12	JPI Class 150		AS Table D		AS Table E	
Thread Standards / Size mm	Metric screw	Metric screw	Unified screw	Metric screw	Metric screw	Metric screw	Unified screw	Metric screw	Metric screw	Metric screw	Metric screw	Metric screw	Unified screw	Metric screw	Unified screw	Metric screw	Unified screw
2.5 (with 10mm flanges)	0.9 to 1.5	1.0 to 1.5		—	1.6 to 2.7	2.0 to 3.2		—	—	1.6 to 2.7	—	1.0 to 1.6		—		—	
2.5 (with 15mm flanges)	0.9 to 1.5	1.0 to 1.5		—	1.6 to 2.7	2.0 to 3.1		—	—	1.9 to 3.2	—	1.0 to 1.6		—		—	
5 (with 10mm flanges)	0.9 to 1.5	1.0 to 1.5		—	1.6 to 2.7	2.0 to 3.2		—	—	1.6 to 2.7	—	1.0 to 1.6		—		—	
5 (with 15mm flanges)	0.9 to 1.5	1.0 to 1.5		—	1.6 to 2.7	2.0 to 3.1		—	—	1.9 to 3.2	—	1.0 to 1.6		—		—	
10 (with 10mm flanges)	0.9 to 1.5	1.0 to 1.5		—	1.6 to 2.7	2.0 to 3.2		—	—	1.6 to 2.7	—	1.0 to 1.6		—		—	
10 (with 15mm flanges)	0.9 to 1.5	1.0 to 1.5		—	1.6 to 2.7	2.0 to 3.1		—	—	1.9 to 3.2	—	1.0 to 1.6		—		—	
15	0.9 to 1.5	1.0 to 1.5		—	1.6 to 2.7	2.0 to 3.1		—	—	1.9 to 3.2	—	1.0 to 1.6		—		—	
25	3.1 to 5.1	2.5 to 4.0		—	5.4 to 9.0	6.6 to 11.0		—	—	5.0 to 8.3	—	2.6 to 4.2		—		—	
32	4.6 to 7.7	3.5 to 5.5		—	8.2 to 13.7	8.8 to 14.6		—	—	8.7 to 14.4	—	—		—		—	
40	5.4 to 8.9	4.3 to 6.8		—	9.6 to 16.0	13.2 to 21.1		—	—	10.7 to 17.9	—	4.5 to 7.3		—		—	
50	8.1 to 13.4	8.0 to 13.2		—	7.0 to 11.7	8.0 to 13.3		—	—	16.8 to 28.1	—	8.2 to 13.6		7.9 to 13.2		8.2 to 13.6	
65	12.6 to 21.0	12.5 to 20.7		—	6.4 to 10.7	7.4 to 12.0		4.8 to 8.1	—	—	—	—		—		—	
80	6.6 to 11.1	12.8 to 21.2		—	8.6 to 14.4	7.4 to 12.0		5.2 to 8.6	7.1 to 11.8	—	13.7 to 22.9	13.1 to 21.6		12.0 to 19.8		12.7 to 21.0	
100	8.7 to 14.5	8.2 to 13.6		—	11.8 to 19.6	10.3 to 16.7		7.0 to 11.6	11.3 to 18.9	—	18.8 to 31.3	8.4 to 13.8		16.3 to 26.9		8.3 to 13.7	
125	14.2 to 23.6	12.0 to 19.4		—	16.6 to 27.6	13.0 to 21.2		9.5 to 15.8	17.3 to 28.9	—	15.9 to 26.5	—		—		—	
150	21.5 to 35.9	19.9 to 32.4		—	32.4 to 54.0	33.0 to 53.6		17.7 to 29.6	34.0 to 56.7	—	24.5 to 40.9	21.7 to 35.2		15.3 to 25.3		19.8 to 32.0	
200	17.0 to 28.4	27.9 to 45.6		21.3 to 35.6	47.2 to 78.7	56.2 to 91.8		14.5 to 24.2	32.6 to 54.3	—	22.6 to 37.6	30.0 to 49.1		20.1 to 33.2		26.8 to 43.7	

Note: When the process connection code EA4 (ASME Class 600) is selected, tighten the bolts to the torque value in accordance with the specifications of the gasket to use.

Tightening torque values for PFA lining (in·lbf)																	
Gasket types within sensor	Fluororubber gasket (Optional codes GA, GC, or GD)																
Gasket types for user's flange	Fluororubber gasket, chloroprene rubber gasket, or the equivalent in hardness																
Flange Rating	JIS 10K	ASME Class 150		EN PN10	JIS 20K	ASME Class 300		EN PN16	EN PN25	EN PN40	JIS F12	JPI Class 150		AS Table D		AS Table E	
Thread Standards / Size inch	Metric screw	Metric screw	Unified screw	Metric screw	Metric screw	Metric screw	Unified screw	Metric screw	Metric screw	Metric screw	Metric screw	Metric screw	Unified screw	Metric screw	Unified screw	Metric screw	Unified screw
0.1 (with 0.4 inch flanges)	8.0 to 13.3	8.9 to 13.3		—	14.2 to 23.9	17.7 to 28.3		—	—	14.2 to 23.9	—	8.9 to 14.2		—		—	
0.1 (with 0.5 inch flanges)	8.0 to 13.3	8.9 to 13.3		—	14.2 to 23.9	17.7 to 27.4		—	—	16.8 to 28.3	—	8.9 to 14.2		—		—	
0.2 (with 0.4 inch flanges)	8.0 to 13.3	8.9 to 13.3		—	14.2 to 23.9	17.7 to 28.3		—	—	14.2 to 23.9	—	8.9 to 14.2		—		—	
0.2 (with 0.5 inch flanges)	8.0 to 13.3	8.9 to 13.3		—	14.2 to 23.9	17.7 to 27.4		—	—	16.8 to 28.3	—	8.9 to 14.2		—		—	
0.4 (with 0.4 inch flanges)	8.0 to 13.3	8.9 to 13.3		—	14.2 to 23.9	17.7 to 28.3		—	—	14.2 to 23.9	—	8.9 to 14.2		—		—	
0.4 (with 0.5 inch flanges)	8.0 to 13.3	8.9 to 13.3		—	14.2 to 23.9	17.7 to 27.4		—	—	16.8 to 28.3	—	8.9 to 14.2		—		—	
0.5	8.0 to 13.3	8.9 to 13.3		—	14.2 to 23.9	17.7 to 27.4		—	—	16.8 to 28.3	—	8.9 to 14.2		—		—	
1.0	27.4 to 45.1	22.1 to 35.4		—	47.8 to 79.7	58.4 to 97.4		—	—	44.3 to 73.5	—	23.0 to 37.2		—		—	
1.3	40.7 to 68.2	31.0 to 48.7		—	72.6 to 121.3	77.9 to 129.2		—	—	77.0 to 127.5	—	—		—		—	
1.5	47.8 to 78.8	38.1 to 60.2		—	85.0 to 141.6	116.8 to 186.8		—	—	94.7 to 158.4	—	39.8 to 64.6		—		—	
2.0	71.7 to 118.6	70.8 to 116.8		—	62.0 to 103.6	70.8 to 117.7		—	—	148.7 to 248.7	—	72.6 to 120.4		69.9 to 116.8		72.6 to 120.4	
2.5	111.5 to 185.9	110.6 to 183.2		—	56.6 to 94.7	65.5 to 106.2		42.5 to 71.7	—	—	—	—		—		—	
3.0	58.4 to 98.2	113.3 to 187.6		—	76.1 to 127.5	65.5 to 106.2		46.0 to 76.1	62.8 to 104.4	—	121.3 to 202.7	115.9 to 191.2		106.2 to 175.2		112.4 to 185.9	
4.0	77.0 to 128.3	72.6 to 120.4		—	104.4 to 173.5	91.2 to 147.8		62.0 to 102.7	100.0 to 167.3	—	166.4 to 277.0	74.3 to 122.1		144.3 to 238.1		73.5 to 121.3	
5.0	125.7 to 208.9	106.2 to 171.7		—	146.9 to 244.3	115.1 to 187.6		84.1 to 139.8	153.1 to 255.8	—	140.7 to 234.5	—		—		—	
6.0	190.3 to 317.7	176.1 to 286.8		—	286.8 to 477.9	292.1 to 474.4		156.7 to 262.0	300.9 to 501.8	—	216.8 to 362.0	192.1 to 311.5		135.4 to 223.9		175.2 to 283.2	
8.0	150.5 to 251.4	246.9 to 403.6		188.5 to 315.1	417.8 to 696.6	497.4 to 812.5		128.3 to 214.2	288.5 to 480.6	—	200.0 to 332.8	265.5 to 434.6		177.9 to 293.8		237.2 to 386.8	

Note: When the process connection code EA4 (ASME Class 600) is selected, tighten the bolts to the torque value in accordance with the specifications of the gasket to use.

Table 3.3.12 Flange Type Tightening Torque Values for Metal Piping and Permeable Fluids

Tightening torque values for PFA lining (N·m)																	
Gasket types within sensor	No gasket (Standard)																
Gasket types for user's flange	Non-asbestos gasket, PTFE-sheathed non-asbestos gasket, or the equivalent in hardness																
Flange Rating	JIS 10K	ASME Class 150		EN PN10	JIS 20K	ASME Class 300		EN PN16	EN PN25	EN PN40	JIS F12	JPI Class 150		AS Table D		AS Table E	
Size mm / Thread Standards	Metric screw	Metric screw	Unified screw	Metric screw	Metric screw	Metric screw	Unified screw	Metric screw	Metric screw	Metric screw	Metric screw	Metric screw	Unified screw	Metric screw	Unified screw	Metric screw	Unified screw
2.5 (with 10mm flanges)	4.0 to 4.5	4.7 to 5.3	5.0 to 5.6	—	4.7 to 5.3	4.7 to 5.3	5.0 to 5.6	—	—	4.0 to 4.5	—	5.1 to 5.8	5.0 to 5.6	—		—	
2.5 (with 15mm flanges)	4.6 to 5.2	4.6 to 5.1	4.8 to 5.5	—	4.7 to 5.2	4.7 to 5.1	4.9 to 5.5	—	—	4.7 to 5.2	—	5.1 to 5.7	4.9 to 5.5	—		—	
5 (with 10mm flanges)	4.0 to 4.5	4.7 to 5.3	5.0 to 5.6	—	4.7 to 5.3	4.7 to 5.3	5.0 to 5.6	—	—	4.0 to 4.5	—	5.1 to 5.8	5.0 to 5.6	—		—	
5 (with 15mm flanges)	4.6 to 5.2	4.6 to 5.1	4.8 to 5.5	—	4.7 to 5.2	4.7 to 5.1	4.9 to 5.5	—	—	4.7 to 5.2	—	5.1 to 5.7	4.9 to 5.5	—		—	
10 (with 10mm flanges)	4.0 to 4.5	4.7 to 5.3	5.0 to 5.6	—	4.7 to 5.3	4.7 to 5.3	5.0 to 5.6	—	—	4.0 to 4.5	—	5.1 to 5.8	5.0 to 5.6	—		—	
10 (with 15mm flanges)	4.6 to 5.2	4.6 to 5.1	4.8 to 5.5	—	4.7 to 5.2	4.7 to 5.1	4.9 to 5.5	—	—	4.7 to 5.2	—	5.1 to 5.7	4.9 to 5.5	—		—	
15	4.6 to 5.2	4.6 to 5.1	4.8 to 5.5	—	4.7 to 5.2	4.7 to 5.1	4.9 to 5.5	—	—	4.7 to 5.2	—	5.1 to 5.7	4.9 to 5.5	—		—	
25	15.3 to 17.2	11.8 to 13.1	12.5 to 13.9	—	15.7 to 17.2	16.3 to 18.0	16.4 to 18.1	—	—	12.2 to 13.5	—	12.9 to 14.4	12.5 to 13.9	—		—	
32	23.0 to 25.7	16.1 to 17.8	17.1 to 18.8	—	23.7 to 26.0	21.8 to 24.0	21.9 to 24.1	—	—	21.4 to 23.6	—	—		—		—	
40	26.7 to 29.7	19.8 to 21.7	20.9 to 23.0	—	27.7 to 30.5	32.8 to 36.1	31.6 to 34.7	—	—	26.6 to 29.3	—	21.9 to 24.1	21.2 to 23.4	—		—	
50	39.8 to 43.8	39.0 to 42.7		—	20.2 to 22.3	19.8 to 21.8	20.0 to 22.0	—	—	41.6 to 45.8	—	39.8 to 43.8	40.0 to 44.0	39.7 to 44.2		40.5 to 44.3	
65	61.1 to 67.3	59.0 to 64.9	59.3 to 65.3	—	30.5 to 33.5	36.0 to 39.6	34.5 to 38.0	24.0 to 26.4	—	—	—	—		—		—	
80	32.8 to 36.1	59.0 to 64.9	59.4 to 65.3	—	41.2 to 45.3	35.6 to 39.2	34.2 to 37.6	25.3 to 27.9	32.9 to 36.2	—	66.4 to 73.0	60.1 to 66.1	60.5 to 66.5	58.6 to 64.6	58.8 to 64.7	60.3 to 66.3	60.6 to 66.7
100	42.3 to 46.6	38.6 to 42.5	38.9 to 42.7	—	55.3 to 60.8	48.3 to 53.1	46.5 to 51.2	33.6 to 37.0	52.9 to 58.2	—	88.8 to 97.6	39.3 to 43.3	39.6 to 43.6	78.1 to 85.9	78.5 to 86.3	39.7 to 43.7	39.9 to 43.9
125	68.9 to 75.8	57.0 to 62.7	55.0 to 60.4	—	77.0 to 84.7	59.0 to 64.9	57.0 to 62.7	44.5 to 48.9	80.7 to 88.8	—	74.9 to 82.4	—		—		—	
150	102.0 to 112.2	91.9 to 101.1	88.6 to 97.5	—	92.4 to 101.7	81.5 to 89.6	79.0 to 86.9	83.3 to 91.6	126.1 to 138.7	—	110.9 to 121.9	100.1 to 110.1	96.4 to 106.1	73.1 to 80.4	73.4 to 80.8	93.8 to 103.1	90.2 to 99.2
200	80.4 to 88.4	120.5 to 132.5	116.4 to 128.1	99.4 to 109.3	132.1 to 145.4	134.1 to 147.6	136.7 to 150.4	67.5 to 74.2	119.7 to 131.7	—	99.7 to 109.6	129.8 to 142.7	125.3 to 137.8	92.8 to 102.1	93.3 to 102.7	121.3 to 133.4	116.9 to 128.6
250	136.0 to 149.6	125.7 to 138.3	128.1 to 140.9	97.7 to 107.5	197.1 to 216.8	135.1 to 148.7	141.8 to 156.0	120.0 to 132.0	181.2 to 199.3	—	190.2 to 209.3	154.4 to 169.9	162.0 to 178.2	170.1 to 187.2	163.4 to 179.8	118.4 to 130.3	114.2 to 125.6
300	109.5 to 120.5	140.6 to 154.7	143.3 to 157.6	102.4 to 112.6	201.2 to 221.3	210.3 to 231.3	223.1 to 245.4	127.6 to 140.3	187.8 to 206.5	—	165.1 to 181.6	171.8 to 188.9	179.8 to 197.8	122.2 to 134.4	117.5 to 129.3	155.0 to 170.5	162.6 to 178.8
350	166.4 to 183.0	225.4 to 247.9	236.1 to 259.7	116.9 to 128.6	—	—		—	287.3 to 316.0	—	268.8 to 295.7	249.8 to 274.7	264.8 to 291.3	211.5 to 232.6	222.9 to 245.2	—	
400	252.0 to 277.2	231.8 to 255.0	243.2 to 267.5	200.7 to 220.7	—	—		—	398.3 to 438.2	—	306.7 to 337.4	258.3 to 284.1	274.1 to 301.5	297.7 to 327.5	313.8 to 345.2	—	
500	—	256.6 to 282.2	272.6 to 299.9	287.9 to 316.7	—	—		353.7 to 389.1	–	—	—	—		—		—	

Note: When the process connection code EA4 (ASME Class 600) is selected, tighten the bolts to the torque value in accordance with the specifications of the gasket to use.

Tightening torque values for PFA lining (in·lbf)																	
Gasket types within sensor	No gasket (Standard)																
Gasket types for user's flange	Non-asbestos gasket, PTFE-sheathed non-asbestos gasket, or the equivalent in hardness																
Flange Rating	JIS 10K	ASME Class 150		EN PN10	JIS 20K	ASME Class 300		EN PN16	EN PN25	EN PN40	JIS F12	JPI Class 150		AS Table D		AS Table E	
Size inch / Thread Standards	Metric screw	Metric screw	Unified screw	Metric screw	Metric screw	Metric screw	Unified screw	Metric screw	Metric screw	Metric screw	Metric screw	Metric screw	Unified screw	Metric screw	Unified screw	Metric screw	Unified screw
0.1 (with 0.4 inch flanges)	35.4 to 39.8	41.6 to 46.9	44.3 to 49.6	—	41.6 to 46.9	41.6 to 46.9	44.3 to 49.6	—	—	35.4 to 39.8	—	45.1 to 51.3	44.3 to 49.6	—		—	
0.1 (with 0.5 inch flanges)	40.7 to 46.0	40.7 to 45.1	42.5 to 48.7	—	41.6 to 46.0	41.6 to 45.1	43.4 to 48.7	—	—	41.6 to 46.0	—	45.1 to 50.4	43.4 to 48.7	—		—	
0.2 (with 0.4 inch flanges)	35.4 to 39.8	41.6 to 46.9	44.3 to 49.6	—	41.6 to 46.9	41.6 to 46.9	44.3 to 49.6	—	—	35.4 to 39.8	—	45.1 to 51.3	44.3 to 49.6	—		—	
0.2 (with 0.5 inch flanges)	40.7 to 46.0	40.7 to 45.1	42.5 to 48.7	—	41.6 to 46.0	41.6 to 45.1	43.4 to 48.7	—	—	41.6 to 46.0	—	45.1 to 50.4	43.4 to 48.7	—		—	
0.4 (with 0.4 inch flanges)	35.4 to 39.8	41.6 to 46.9	44.3 to 49.6	—	41.6 to 46.9	41.6 to 46.9	44.3 to 49.6	—	—	35.4 to 39.8	—	45.1 to 51.3	44.3 to 49.6	—		—	
0.4 (with 0.5 inch flanges)	40.7 to 46.0	40.7 to 45.1	42.5 to 48.7	—	41.6 to 46.0	41.6 to 45.1	43.4 to 48.7	—	—	41.6 to 46.0	—	45.1 to 50.4	43.4 to 48.7	—		—	
0.5	40.7 to 46.0	40.7 to 45.1	42.5 to 48.7	—	41.6 to 46.0	41.6 to 45.1	43.4 to 48.7	—	—	41.6 to 46.0	—	45.1 to 50.4	43.4 to 48.7	—		—	
1.0	135.4 to 152.2	104.4 to 115.9	110.6 to 123.0	—	139.0 to 152.2	144.3 to 159.3	145.2 to 160.2	–	–	108.0 to 119.5	–	114.2 to 127.5	110.6 to 123.0	—		—	
1.3	203.6 to 227.5	142.5 to 157.5	151.3 to 166.4	—	209.8 to 230.1	192.9 to 212.4	193.8 to 213.3	–	–	189.4 to 208.9	–	—		—		—	
1.5	236.3 to 262.9	175.2 to 192.1	185.0 to 203.6	—	245.2 to 269.9	290.3 to 319.5	279.7 to 307.1	—	—	235.4 to 259.3	—	193.8 to 213.3	187.6 to 207.1	—		—	
2.0	352.3 to 387.7	345.2 to 377.9		—	178.8 to 197.4	175.2 to 192.9	177.0 to 194.7	—	—	368.2 to 405.4	—	352.3 to 387.7	354.0 to 389.4	351.4 to 391.2		358.5 to 392.1	
2.5	540.8 to 595.7	522.2 to 574.4	524.8 to 578.0	—	269.9 to 296.5	318.6 to 350.5	305.4 to 336.3	212.4 to 233.7	–	—	—	—		—		—	
3.0	290.3 to 319.5	522.2 to 574.4	525.7 to 578.0	—	364.7 to 400.9	315.1 to 346.9	302.7 to 332.8	223.9 to 246.9	291.2 to 320.4	—	587.7 to 646.1	531.9 to 585.0	535.5 to 588.6	518.7 to 571.8	520.4 to 572.6	533.7 to 586.8	536.4 to 590.3
4.0	374.4 to 412.4	341.6 to 376.2	344.3 to 377.9	—	489.4 to 538.1	427.5 to 470.0	411.6 to 453.2	297.4 to 327.5	468.2 to 515.1	—	785.9 to 863.8	347.8 to 383.2	350.5 to 385.9	691.2 to 760.3	694.8 to 763.8	351.4 to 386.8	353.1 to 388.5
5.0	609.8 to 670.9	504.5 to 554.9	486.8 to 534.6	—	681.5 to 749.7	522.2 to 574.4	504.5 to 554.9	393.9 to 432.8	714.3 to 785.9	—	662.9 to 729.3	—		—		—	
6.0	902.8 to 993.1	813.4 to 894.8	784.2 to 862.9	—	817.8 to 900.1	721.3 to 793.0	699.2 to 769.1	737.3 to 810.7	1116.1 to 1227.6	—	981.5 to 1078.9	886.0 to 974.5	853.2 to 939.1	647.0 to 711.6	649.6 to 715.1	830.2 to 912.5	798.3 to 878.0
8.0	711.6 to 782.4	1066.5 to 1172.7	1030.2 to 1133.8	879.8 to 967.4	1169.2 to 1286.9	1186.9 to 1306.4	1209.9 to 1331.2	597.4 to 656.7	1059.4 to 1165.6	—	882.4 to 970.0	1148.8 to 1263.0	1109.0 to 1219.6	821.3 to 903.7	825.8 to 909.0	1073.6 to 1180.7	1034.7 to 1138.2
10	1203.7 to 1324.1	1112.5 to 1224.1	1133.8 to 1247.1	864.7 to 951.5	1744.5 to 1918.8	1195.7 to 1316.1	1255.0 to 1380.7	1062.1 to 1168.3	1603.8 to 1764.0	—	1683.4 to 1852.5	1366.6 to 1503.7	1433.8 to 1577.2	1505.5 to 1656.9	1446.2 to 1591.4	1047.9 to 1153.3	1010.8 to 1111.7
12	969.2 to 1066.5	1244.4 to 1369.2	1268.3 to 1394.9	906.3 to 996.6	1780.8 to 1958.7	1861.3 to 2047.2	1974.6 to 2172.0	1129.4 to 1241.8	1662.2 to 1827.7	—	1461.3 to 1607.3	1520.6 to 1671.9	1591.4 to 1750.7	1081.6 to 1189.5	1040.0 to 1144.4	1371.9 to 1509.1	1439.1 to 1582.5
14	1472.8 to 1619.7	1995.0 to 2194.1	2089.7 to 2298.5	1034.7 to 1138.2	—	—		—	2542.8 to 2796.8	—	2379.1 to 2617.2	2210.9 to 2431.3	2343.7 to 2578.2	1871.9 to 2058.7	1972.8 to 2170.2	—	
16	2230.4 to 2453.4	2051.6 to 2256.9	2152.5 to 2367.6	1776.3 to 1953.4	—	—		—	3525.3 to 3878.4	—	2714.5 to 2986.2	2286.1 to 2514.5	2426.0 to 2668.5	2634.9 to 2898.6	2777.4 to 3055.3	—	
20	—	2271.1 to 2497.7	2412.7 to 2654.3	2548.1 to 2803.0	—	—		3130.5 to 3443.8	–	—	—	—		—		—	

Note: When the process connection code EA4 (ASME Class 600) is selected, tighten the bolts to the torque value in accordance with the specifications of the gasket to use.

3.3.4 Gasket Size (customer pipe)

WARNING

All gaskets used for piping of Magnetic Flowmeters should be prepared by customers except in some cases.

Be sure to choose a gasket with an inner and outer diameter that does not protrude inside the piping.
If the inner diameter of the gasket is too large, or outer diameter of the gasket is too small, fluid leakage may result.

Table 3.3.13 Inner Diameter of Grounding Ring, Outer Diameter for Effective Sealing and Recommended Inner Diameter of Gasket

Unit: mm

Size	PFA Lining										Ceramics Tube				
	Wafer					Flange					Wafer				
	Inner Diameter for Effective Sealing [øA]	Outer Diameter for Effective Sealing [øB]	Recommended Inner Diameter of Gasket		Minimum Inner Diameter of Gasket*2	Inner Diameter for Effective Sealing [øA]	Outer Diameter for Effective Sealing [øB]	Recommended Inner Diameter of Gasket		Minimum Inner Diameter of Gasket*2	Inner Diameter for Effective Sealing [øA]	Outer Diameter for Effective Sealing [øB]	Recommended Inner Diameter of Gasket		Minimum Inner Diameter of Gasket*2
			Flat Gasket [øC]	PTFE-sheathed Gasket [øD]				Flat Gasket [øC]	PTFE-sheathed Gasket [øD]				Flat Gasket [øC]	PTFE-sheathed Gasket [øD]	
2.5	15	38	17	22	15	15	30	17 [15]*1	22 [19]*1	15	—	—	—		—
5	15	38	17	22	15	15	30	17 [15]*1	22 [19]*1	15	—	—	—		—
10	15	38	17	22	15	15	30	17 [15]*1	22 [19]*1	15	—	—	—		—
15	18	38	22		15	22	34	22		15	15	33	22		15
25	32	54	35		28	35	54	35		29	27	50	35		27
32	37	58	43		34	40	64	43		34	—	—	—		—
40	45	71	49		41	48	72	49		41	40	68	49		40
50	58	84	61		53	61	89	61		53	52	82	61		52
65	69	103	84		66	72	108	84		66	—	—	—		—
80	81	114	90		81	85	119	90		81	81	112	90		81
100	106	140	115		102	110	146	115		102	98	134	115		98
125	131	165	141		128	136	173	141		128	—	—	—		—
150	164	190	167		147	164	209 {216}*1	167		150	144	188	167		144
200	218	240	218		199	218	259 {272}*1	218		201	192	240	218		192
250	—	—	—		—	270	320 {332}*1	270		250	—	—	—		—
300	—	—	—		—	321	367 {392}*1	321		301	—	—	—		—
350	—	—	—		—	350	412	359		330	—	—	—		—
400	—	—	—		—	401	475	410		381	—	—	—		—
500	—	—	—		—	581	581 <606>*1	513		465	—	—	—		—

Unit: inch

Size	PFA Lining										Ceramics Tube				
	Wafer					Flange					Wafer				
	Inner Diameter for Effective Sealing [øA]	Outer Diameter for Effective Sealing [øB]	Recommended Inner Diameter of Gasket		Minimum Inner Diameter of Gasket*2	Inner Diameter for Effective Sealing [øA]	Outer Diameter for Effective Sealing [øB]	Recommended Inner Diameter of Gasket		Minimum Inner Diameter of Gasket*2	Inner Diameter for Effective Sealing [øA]	Outer Diameter for Effective Sealing [øB]	Recommended Inner Diameter of Gasket		Minimum Inner Diameter of Gasket*2
			Flat Gasket [øC]	PTFE-sheathed Gasket [øD]				Flat Gasket [øC]	PTFE-sheathed Gasket [øD]				Flat Gasket [øC]	PTFE-sheathed Gasket [øD]	
0.1	0.59	1.50	0.67	0.87	0.59	0.59	1.18	0.67 [0.59]*1	0.87 [0.75]*1	0.59	—	—	—		—
0.2	0.59	1.50	0.67	0.87	0.59	0.59	1.18	0.67 [0.59]*1	0.87 [0.75]*1	0.59	—	—	—		—
0.4	0.59	1.50	0.67	0.87	0.59	0.59	1.18	0.67 [0.59]*1	0.87 [0.75]*1	0.59	—	—	—		—
0.5	0.71	1.50	0.87		0.59	0.87	1.34	0.87		0.59	0.59	1.30	0.87		0.59
1.0	1.26	2.13	1.38		1.10	1.39	2.13	1.38		1.14	1.06	1.97	1.38		1.06
1.25	1.46	2.28	1.69		1.34	1.59	2.53	1.69		1.34	—	—	—		—
1.5	1.76	2.80	1.93		1.61	1.89	2.83	1.93		1.61	1.57	2.68	1.93		1.57
2.0	2.26	3.31	2.40		2.09	2.39	3.50	2.40		2.09	2.05	3.23	2.40		2.05
2.5	2.73	4.06	3.31		2.60	2.84	4.25	3.31		2.60	—	—	—		—
3.0	3.19	4.49	3.54		3.19	3.33	4.69	3.54		3.19	3.19	4.41	3.54		3.19
4.0	4.19	5.51	4.53		4.02	4.34	5.75	4.53		4.02	3.86	5.28	4.53		3.86
5.0	5.14	6.50	5.55		5.04	5.34	6.81	5.55		5.04	—	—	—		—
6.0	6.46	7.48	6.57		5.79	6.46	8.23 {8.50}*1	6.57		5.91	5.67	7.40	6.57		5.67
8.0	8.58	9.45	8.58		7.83	8.58	10.20 {10.71}*1	8.58		7.91	7.56	9.45	8.58		7.56
10	—	—	—		—	10.61	12.60 {13.07}*1	10.63		9.84	—	—	—		—
12	—	—	—		—	12.64	14.44 {15.43}*1	12.64		11.85	—	—	—		—
14	—	—	—		—	13.76	16.22	14.13		12.99	—	—	—		—
16	—	—	—		—	15.78	18.70	16.14		15.00	—	—	—		—
20	—	—	—		—	22.87	22.87 <23.86>*1	20.20		18.31	—	—	—		—

*1: The value varies depending on the selection of process connection code:
DJ1, DJ2, DE4: Values in [ ].
BA2, BJ2, CA2, CJ2, PA2: Values in { }.
BE2, CE2: Values in < >.

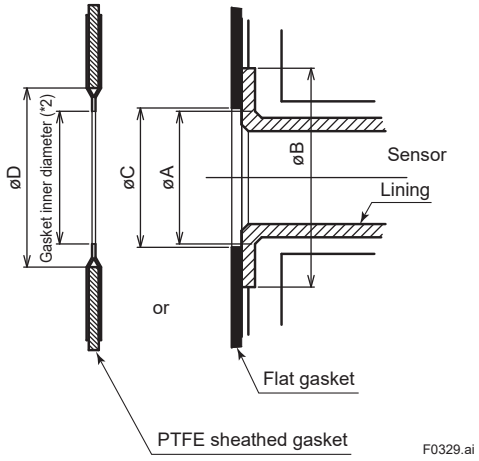

*2: To prevent the gasket from protruding into the flow path, make sure that this length is smaller than the minimum inner diameter of the gasket in the table.

3.3.5 Size 15 to 125 mm (0.5 to 5 in.), Hygienic Type

The hygienic type can be mounted to the piping using a clamp, a union, or a welded joint.

NOTE

This section describes the remote sensor as an example. The same procedure also applies to the integral flowmeter.

Hygienic adapters are engraved with character as identification.

Table 3.3.14 Hygienic Adapter Identification

Identification Character	Material for Adapter
No mark	Stainless Steel 304
F	Stainless Steel F304
L	Stainless Steel 316L
FL	Stainless Steel F316L

(1) Mounting Direction

Mount the flowmeter so that the flow direction of the fluid to be measured is in line with the direction of the arrow mark on the flowmeter.

IMPORTANT

If it is impossible to match the direction of the arrow mark, the direction of the cable entry can be changed. Read Section 3.5.
In case the fluid being measured flows against the arrow direction, change the value from “Forward” to “Reverse” at the parameter “Flow direct”. Read the user’s manual of the applicable communication type (for AXG/AXG4A/AXG1A) or the hardware/software edition (for AXFA11) as listed in Table 1.1.

Display Menu Path (AXG/AXG4A/AXG1A):
Device setup ▶ Detailed setup ▶ AUX calculation ▶ Flow direct

(2) Mounting Procedure

(a) Clamp type
(process connection codes: H□□)

1) Welding ferrule
Weld a ferrule to the piping.

IMPORTANT

When welding the ferrule, pay attention to the edge preparation, level differences between the ferrule and the piping, and the welding current to avoid deforming the piping or causing stagnation portion of the fluid.

2) Installing gasket
Install a gasket for clamp to fit in the groove on the ferrule.
Use the complied gasket for Sanitary standard 3-A in case of optional code 3A.

3) Positioning flowmeter
Position the flowmeter between the two ferrules.

4) Tightening clamp
Install a clamp to cover the tapered parts of the flowmeter-side adapter and the ferrule, and tighten the clamp bolts.

5) Confirmation of adapter mounting bolt
After installation of the magnetic flowmeter, be sure to retighten the adapter mounting bolt according to Table 3.3.16 or Table 3.3.17.
Be sure to confirm that leakage from adapter connection point does not occur by filling the pipe of the sensor with fluid.

NOTE

The ferrule, clamp, and gasket are not provided with the flowmeter, and must be provided by the user.

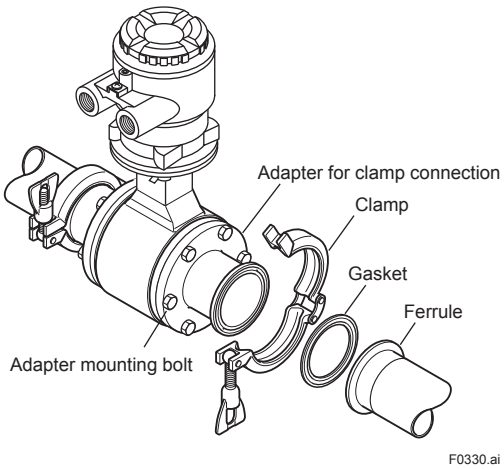

Figure 3.3.6 Mounting Procedure for Clamp Type

(b) Union type

(process connection codes: J□□)

1) Welding sleeve

Pass the piping through a nut and then weld a sleeve to the piping.

IMPORTANT

- Be sure to weld the sleeve after passing the piping through the nut.
- When welding the sleeve, pay attention to the edge preparation, level differences between the sleeve and the piping, and the welding current to avoid deforming the piping or causing stagnation of some of the fluid.

2) Installing gasket

Install a gasket for union to fit in the groove on the sleeve.

3) Positioning flowmeter

Move the nut closer to the piping temporarily and position the flowmeter between the two sleeves.

4) Tightening nut

Install the nut to cover the tapered parts of the flowmeter-side adapter and the sleeve, and tighten it using a spanner according to the torque values in Table 3.3.15.

5) Confirmation of adapter mounting bolt

After installation of the magnetic flowmeter, be sure to retighten the adapter mounting bolt according to Table 3.3.16 or Table 3.3.17.
Be sure to confirm that leakage from adapter connection point does not occur by filling the pipe of the sensor with fluid.

Table 3.3.15 Tightening torque values for Union Connection Type

Tightening torque values for nut (N·m)	
Union type / Size mm	ISO 2853 Union (for JIS G3447 Piping),
25	51 to 76
32	61 to 91
40	62 to 93
50	63 to 94
65	78 to 118
80	88 to 132
100	99 to 148

NOTE

The sleeve, nut, and gasket are not provided with the flowmeter, and must be provided by the user.

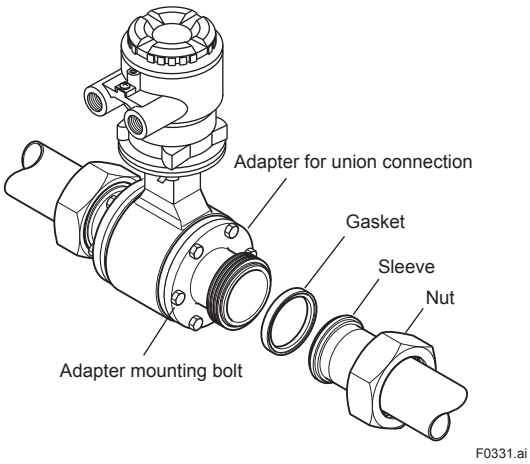

Figure 3.3.7 Mounting Procedure for Union Type

(c) Butt weld joint type

(process connection codes: K□□)

1) Removing adapter

Remove the butt weld adapter by loosening the mounting bolts.

2) Welding ferrule or sleeve

Weld a ferrule, a sleeve, or an alternative (provided by the user) to the butt weld adapter.

IMPORTANT

- Be sure to weld the ferrule, the sleeve, or the alternative after removing the butt weld adapter from the flowmeter itself.
- When welding the ferrule, the sleeve, or the alternative, pay attention to the edge preparation, level differences between them and the piping, and the welding current to avoid deforming the piping or causing stagnation portion of the fluid.

3) Installing adapter

Install a gasket to fit in the groove of the butt weld adapter, and tighten the mounting bolts.

CAUTION

- In case of EPDM rubber gasket (standard or optional code 3A), or silicone rubber gasket (optional code GH), equally tighten the adapter mounting bolt according to the torque values in Table 3.3.16.
- Tighten the adapter mounting bolts in diagonal order step by step in three or four times.
- After tightening of bolts, confirm that the inner surface of the gaskets does not become excessively uneven from the adapter.

Table 3.3.16 Tightening Torque Values of adapter for EPDM rubber gasket, silicone rubber gasket and EPDM rubber gasket for optional code 3A

Tightening torque values (N·m / [in·lbf])			
Gasket / Size type mm (inch)	EPDM rubber		Silicone rubber
	Standard	Optional code 3A	Optional code GH
15 (0.5), 25 (1.0), 32 (1.25), 40 (1.5)	3.0 to 3.5 / [26.55 to 30.98]	2.0 to 2.5 / [17.70 to 22.13]	
50 (2.0), 65 (2.5)	4.5 to 5.0 / [39.83 to 44.25]	4.0 to 4.5 / [35.40 to 39.83]	
80 (3.0)	8.0 to 9.0 / [70.81 to 79.65]		
100 (4.0), 125 (5.0)	10 to 11 / [88.50 to 97.35]	6.0 to 6.5 / [53.10 to 57.53]	

4) Mounting flowmeter to piping
Connect the flowmeter to the piping in a manner appropriate to the ferrule, the sleeve, or the alternative that has been welded to the adapter.

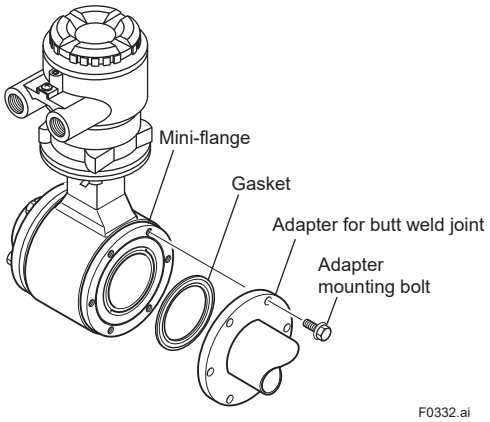

Figure 3.3.8 Mounting Procedure for Butt Weld Joint Type

5) Confirmation of adapter mounting bolt
After installation of the magnetic flowmeter, be sure to retighten the adapter mounting bolt according to Table 3.3.16 or Table 3.3.17.
Be sure to confirm that leakage from adapter connection point does not occur by filling the pipe of the sensor with fluid

3.4 Remote Transmitter Installation

WARNING

Installation of the magnetic flowmeter must be performed by expert engineer or skilled personnel.
No operator shall be permitted to perform procedures relating to installation.

3.4.1 Installation Location

IMPORTANT

Install the product in a location where it is not exposed to direct sunlight. For ambient temperature, read the applicable general specifications as listed in Table 1.1. The product may be used in an ambient humidity where the RH ranges from 0 to 100%. However, avoid long-term continuous operation at relative humidity above 95%.

3.4.2 Mounting of AXG4A Transmitter

AXG4A Remote Transmitter can be mounted on a 2-inch pipe in a vertical or horizontal position depending on the installation site.

- **Vertical Pipe Mounting**

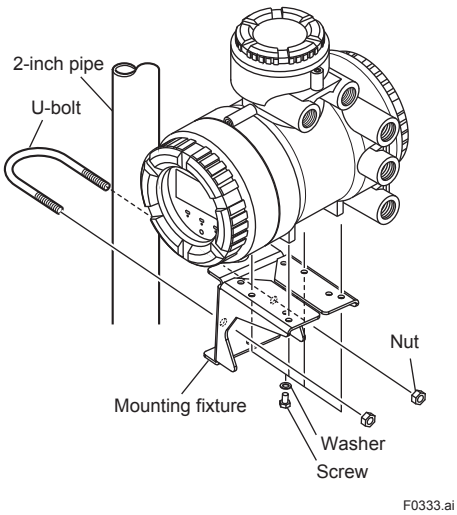

Figure 3.4.1 2-inch Pipe Vertical Mounting

1. Fix the product on the mounting fixture using four screws.
2. Fix the mounting fixture with the product installed on a 2-inch pipe using a U-bolt.

- **Horizontal Pipe Mounting**

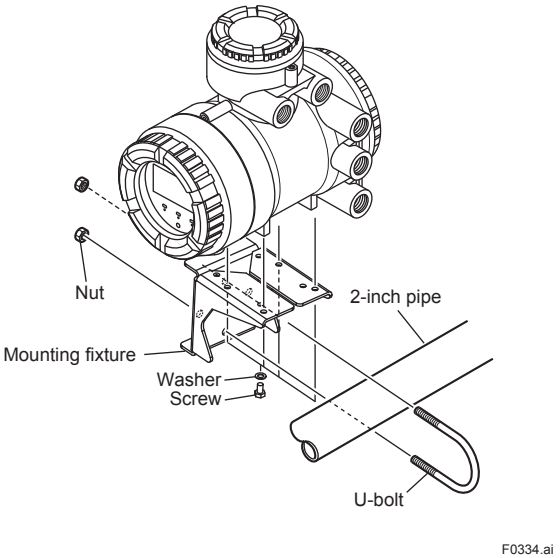

Figure 3.4.2 2-inch Pipe Horizontal Mounting

1. Fix the product on the mounting fixture using four screws.
2. Fix the mounting fixture with the product installed on a 2-inch pipe using a U-bolt.

3.4.3 Mounting of AXG1A Transmitter

AXG1A Remote Transmitter can be mounted using surface mounting, 2-inch pipe mounting, or panel mounting.

- **Surface Mounting (Wall Mounting)**

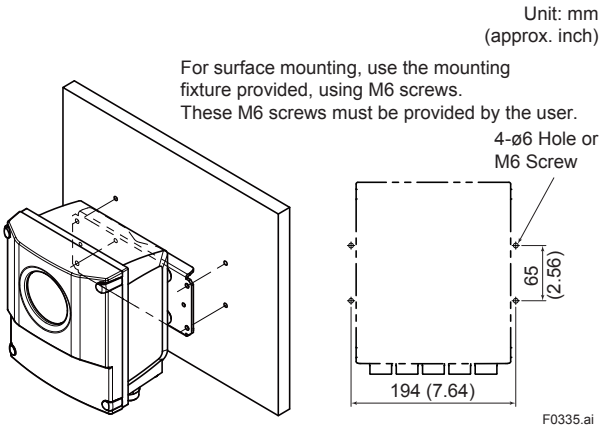

Figure 3.4.3 Surface Mounting

IMPORTANT

Mounting fixture on equipment intended to be mounted on a wall or ceiling shall withstand a force of four times the weight of the equipment (AXG1A: 3.5 kg (7.7 lb)).

- **2-inch Pipe Mounting**

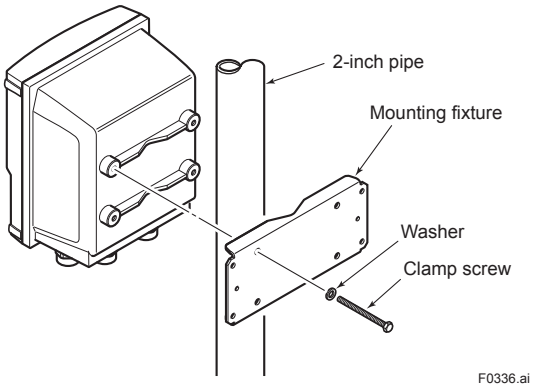

Figure 3.4.4 2-inch Pipe Mounting

1. Pass the four clamp screws through the mounting fixture.
2. position it on the 2-inch pipe, and then fasten the AXG1A in place.

- **Panel Mounting**

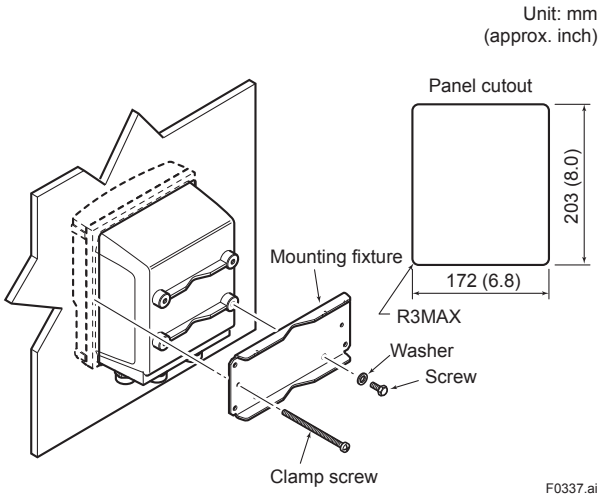

Figure 3.4.5 Panel Mounting

1. Fit the AXG1A into the panel.
2. Attach the mounting fixture to the AXG1A using the screw and the washer, and secure the product with the two clamp screws.

3.4.4 Mounting of AXFA11 Transmitter

AXFA11 Remote Transmitter can be mounted using surface mounting, 2-inch pipe mounting, or panel mounting, by the same process of AXG1A. Please refer 3.4.3. for the process.

IMPORTANT

Mounting fixture on equipment intended to be mounted on a wall or ceiling shall withstand a force of four times the weight of the equipment (AXFA11: 3.4 kg (7.5 lb)).

3.5 Changing Direction of Cable Entry

IMPORTANT

The following types can not be changed direction of cable entry after delivery.

- Submersible Type (Suffix code: -W)
- For District Heating and Cooling or Condensation-proof (Optional code: DHC)

(1) The following tool is required.
  - Hexagonal wrench (nominal size 5)

(2) Turn off the power to the flowmeter.

(3) Using the wrench, unscrew the four hexagonal bolts at the neck of transmitter or terminal box.

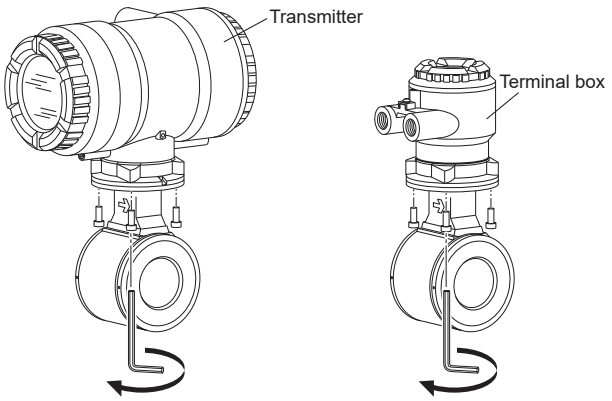

AXG Integral Flowmeter **AXG Remote Sensor**

F0338.ai

CAUTION

Do not loosen the screw at the opposite side of cable entry (see the figure below).

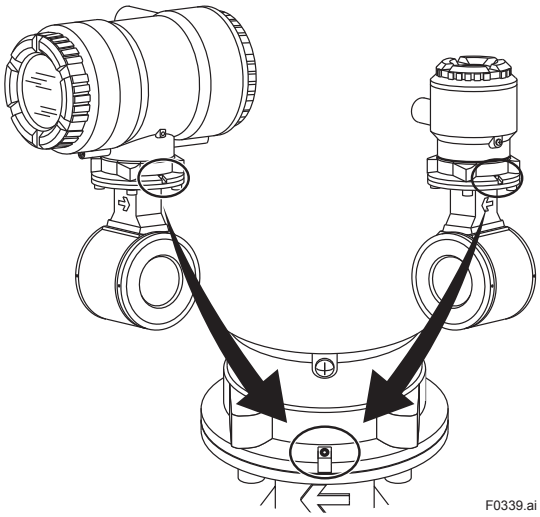

F0339.ai

(4) Rotate the transmitter or the terminal box in the desired direction. The direction can be changed to -90 degrees, +90 degrees or +180 degrees.

NOTE

The transmitter and the terminal box can be rotated -90 degrees to +180 degrees at every 90 degrees from the arrow mark indicating the flow direction. Do not exceed these angle.

(5) Tighten diagonally the four hexagonal bolts with the hexagonal wrench, and then be sure to check that the transmitter or the terminal box was firmly fixed to the sensor.

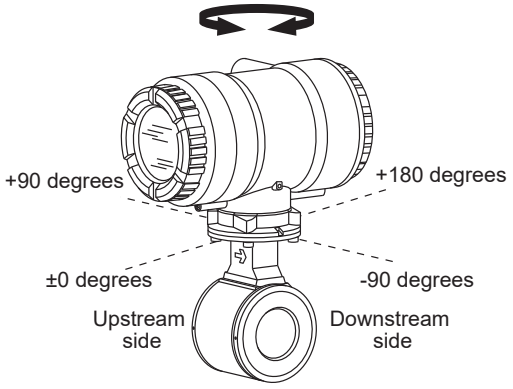

AXG Integral Flowmeter

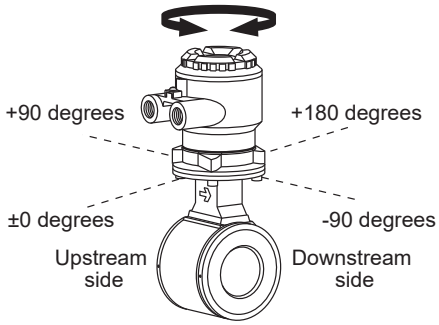

AXG Remote Sensor

F0340.ai

3.6 Changing Direction of Display Unit

(1) Removing the Cover

- The following tool is required.
  Hexagonal wrench (nominal size 3)
- Turn off the power to the flowmeter.
- Using the wrench, loosen the cover locking screw (1) (See Figure 3.6.1 and Figure 3.6.2) clockwise to unlock the cover. Upon shipment from the manufacturing plant, the cover is locked. Hold the flowmeter with your hand. Remove the cover by rotating it counterclockwise.

WARNING

- For explosion protection type products, please confirm that it is “no explosive atmosphere”.

WARNING

- When opening and closing the cover, be sure to handle the cover carefully so that there are no damage and foreign matter adhesion at its threads and O-ring. Keep checking their condition and clean the threads in case of adhering the foreign matter.
- Replace the cover in case the treads receive damages.
- Replace the O-ring if there is any scarring or transformation. And apply silicone based grease at the O-ring in case of the shortage and exhaustion of grease.

IMPORTANT

- When closing the cover, close it with both hands until the cover does not turn in order to bring the housing and cover into tight contact.
- Tighten while confirming that the cover rotates smoothly.

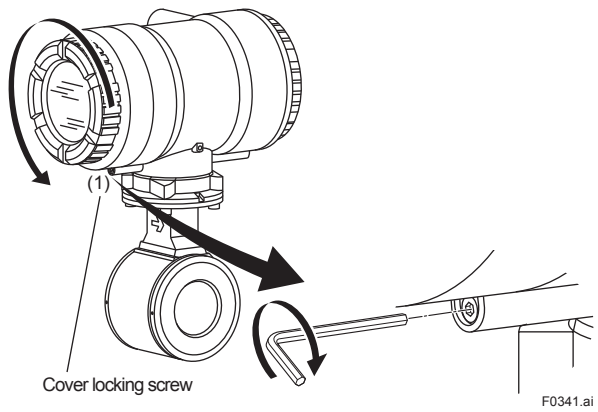

Figure 3.6.1 Removing the Display Cover (Integral Flowmeter)

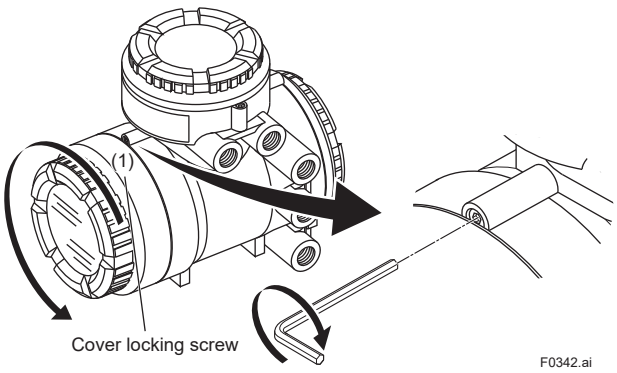

Figure 3.6.2 Removing the Display Cover (AXG4A Remote Transmitter)

(2) Changing Display Unit Direction 90 degrees

- Hold the display unit with your hand and loosen the two mounting screws.
- Rotate the display unit 90 degrees clockwise and confirm the assembling position, taking care of the connector and wire of the display unit.
  At this time, do not remove the connector.
- Secure the display unit using its two mounting screws.

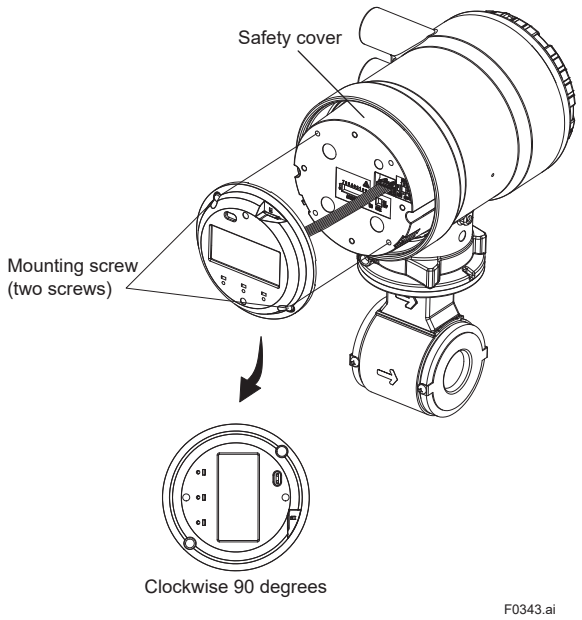

Figure 3.6.3 Changing Display Unit Direction 90 degrees

IMPORTANT

To preserve the safety, do not touch the electrical circuit and cable of shaded area.

WARNING

- To prevent electric shocks and maintain performance, do not remove safety cover.

(3) Installing the Cover

- Install the cover to the flowmeter by rotating the cover clockwise.
- Tighten cover locking screw (1) (See Figure 3.6.1 and Figure 3.6.2) counterclockwise using a hexagonal wrench (nominal size 3) to lock the cover.

IMPORTANT

- When closing the cover, close it with both hands until the cover does not turn in order to bring the housing and cover into tight contact.
- Tighten while confirming that the cover rotates smoothly.

WARNING

- When opening and closing the cover, be sure to handle the cover carefully so that there are no damage and foreign matter adhesion at its threads and O-ring. Keep checking their condition and clean the threads in case of adhering the foreign matter.
- Replace the cover in case the treads receive damages.
- Replace the O-ring if there is any scarring or transformation. And apply silicone based grease at the O-ring in case of the shortage and exhaustion of grease.

4. Wiring

WARNING

The wiring of the magnetic flowmeter must be performed by expert engineer or skilled personnel. No operator shall be permitted to perform procedures relating to wiring.

WARNING

For explosion protection type products, please be sure to read the user's manual of the applicable explosion protection type as listed in Table 1.1 before wiring.

CAUTION

Once all wiring is completed, check the connections before applying power to the product. Improper arrangements or wiring may cause a unit malfunction or damage.

4.1 Wiring Precautions

Be sure to observe the following precautions when wiring:

CAUTION

- In order to maintain performance, wiring according to regulations is necessary.
- When opening the cover, wait for more than 20 minutes after turning off the power.
- In cases where the ambient temperature exceeds 50°C, use external heat resistant wiring with a maximum allowable temperature of 70°C or above.
- Do not connect cables outdoors in wet weather in order to prevent damage from condensation and to protect the insulation, e.g. inside the terminal box of the flowmeter.
- Before turning the power on, tighten the terminal box cover securely.
- For the remote type, do not splice the cable between the transmitter and the sensor terminal when it is too short. Replace it with a complete cable of the appropriate length.
- For the remote type, ground the remote sensor and the transmitter separately.

CAUTION

- Terminate all the cable finish with crimp terminal of a round or rod shape (depending on the shape of the terminal block), and connect them reliably.
- Always route the power and output signal cables in separate steel conduit tubes, except when the power supply voltage is 24 V and four-core cables are used for wiring. For the remote type, route the excitation cable and the signal cable in separate steel conduit tubes. Keep conduits or flexible tubes watertight using sealing tape.

CAUTION

- If there is any unused cable entry, use the blanking plug to cover which comes with this product or which is supplied by YOKOGAWA. The blanking plug should be fastened into the unused cable entry without any mistake. If not, stated enclosure protection is not applicable. One or two blanking plug is provided depending on the specifications (24 V for power supply voltage or I/O selection).
- The signal cables must be routed in separate steel conduit tubes 16 (JIS C 8305) or flexible conduit tubes 15 (JIS C 8309).
- When waterproof glands or union equipped waterproof glands are used, avoid tightening the glands with an excessive torque.
- For the instruction of removing/installing the housing covers and handling the locking screws, read Section 4.4 and Section 4.5.
- Explosion protected types must be wired in accordance with specific requirement (and, in certain countries, legal regulations) in order to preserve the effectiveness of their explosion protected features.

IMPORTANT

For the remote type, prepare the excitation cable (supplied by customer) and the signal cable of almost the same length. It is recommended to lay them together closely.

4.2 Cables

4.2.1 Recommended Cable for Excitation, Power and Input/Output:

JIS C 3401 control cable equivalent
JIS C 3312 power cable equivalent
14 AWG Belden 8720 equivalent

Outer Diameter:

With no gland option:
6.5 to 12 mm (0.26 to 0.47 in.)
With waterproof gland (optional code EG, EG□, EU, EU□, EW):
For excitation cable:
10.5 or 11.5 mm (0.41 or 0.45 in.)
For power and input/output cable:
7.5 to 12 mm (0.30 to 0.47 in.)
With plastic gland (optional code EP, EP□:
6 to 12 mm (0.24 to 0.47 in.)

Nominal Cross Section:

Single wire; 0.5 to 2.5 mm^2
Stranded wire; 0.5 to 1.5 mm^2

Excitation cable for submersible use and optional code DHC:

Heat resistant vinyl resin sheath cable
Outer diameter ø 10.5 mm

In case of power cable, Green/Yellow covered conductor shall be used only for connection to PROTECTIVE CONDUCTOR TERMINALS. Conform to IEC227, IEC245 or equivalent national authorization.

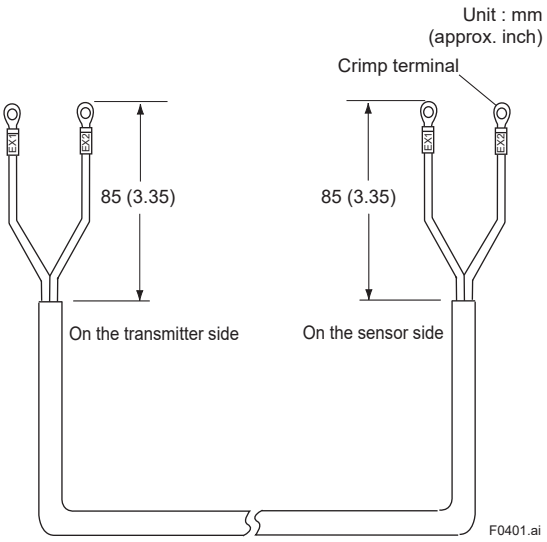

Figure 4.2.1 Cable Finish for Excitaiton Cable

NOTE

- For excitation cable and power cable, always use a crimp terminal with an insulation cover.
- Use crimp tools supplied by the manufacturer of the crimp terminal you want to use to connect the crimp terminal and cable.
- Use crimp tools that are appropriate for the diameter of the cable to be connected.

4.2.2 Dedicated Signal Cable (AX01C)

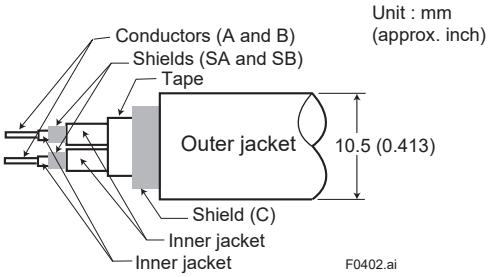

Figure 4.2.2 Dedicated Signal Cable

The flow signal is transmitted via this dedicated cable. The cable is constructed with double shielding over the two conductors, and heat-resistant vinyl is used for the outer jacket material.
Finished diameter: 10.5 mm (0.413 in.)
Maximum length:
Combination with the AXG1A/AXFA11 transmitter:
200 m (660 ft)
Combination with the AXG4A transmitter: 100 m (330 ft)
Maximum temperature: 80°C (176°F)

IMPORTANT

If the cable is longer than required, cut off any extra length rather than coiling it up, and terminate the conductors as shown in Figure 4.2.3.
Avoid using junction terminal boards to extend the cable length, as this will interrupt the shielding.

Cable Finish: Finished

Unit: mm (approx. in.)

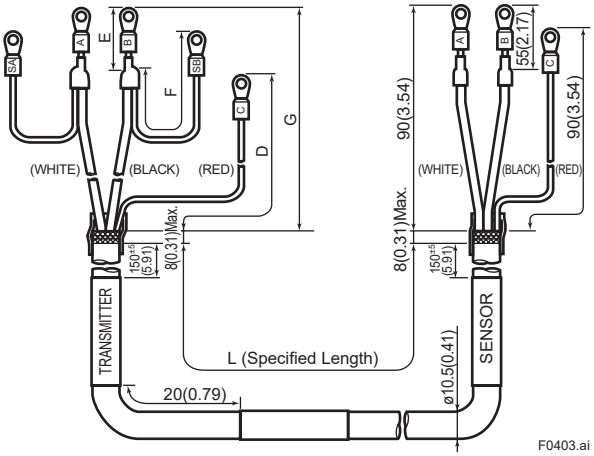

Specification Code	Length				Description
	D	E	F	G	
AX01C-C□□□	60 (2.4)	25 (1.0)	70 (2.8)	50 (2.0)	For AXG4A
AX01C-B□□□	70 (2.8)	25 (1.0)	50 (2.0)	60 (2.4)	For AXG1A
AX01C-D□□□	70 (2.8)	25 (1.0)	50 (2.0)	60 (2.4)	For AXFA11

Cable Finish: Unfinished

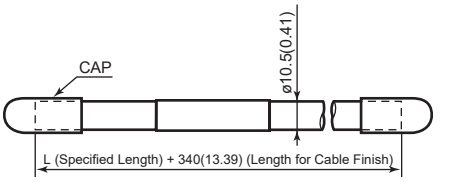

Figure 4.2.3 Cable Finish for Signal Cable

CAUTION

- As crimp terminals A, B, SA, SB and C have their own electrical potentials, securely insulate them so as not to come in contact with one another.
- To prevent a shield from coming in contact with another shield or the case, cover each shield with a vinyl tube or wrap it in vinyl tape.

4.2.3 Recommended Cable for Modbus communication

3-Wire cable (twisted pair and Common) with shield should be used.

Wire gauge: AWG24 or wider

Characteristic Impedance of cable: 100Ω or more

4.2.4 Recommended Cable for FOUNDATION fieldbus, PROFIBUS PA communication

Fieldbus type-A specification cable should be used.

4.2.5 Recommended Cable for EtherNet/IP communication

STP (Shielded Twist Pair) with CAT5e, CAT6 or more.

Note: Ethernet cable with Protective boot is not fit. Ensure that protective boot is not equipped.

4.3 Cable Entries

WARNING

For explosion protection type products, please be sure to read the user's manual of the applicable explosion protection type as listed in Table 1.1.

This product is of watertight construction as stipulated in JIS C 0920. It is shipped with a wiring bracket (waterproof gland, waterproof gland with union or a plastic gland attached), only in cases where an optional specification is selected for the cable entry.

Cable gland has the following kinds depending on the type and size.

Integral Type Flowmeter

AXG (Size: 2.5 to 400 mm (0.1 to 16 in.))

Optional Code	Description
EG2	2 pcs. of waterproof gland, and a blanking plug
EG3	3 pcs. of waterproof gland
EU2	2 pcs. of waterproof gland with union joint, and a blanking plug
EU3	3 pcs. of waterproof gland with union joint
EP2	2 pcs. of plastic gland, and a blanking plug
EP3	3 pcs. of plastic gland

Remote Sensor

AXG (Size: 2.5 to 500 mm (0.1 to 20 in.))

Optional Code	Description
EW	2 pcs. of waterproof gland with JIS G3/4 female
EG	2 pcs. of waterproof gland
EU	2 pcs. of waterproof gland with union joint
EP	2 pcs. of plastic gland

Remote Transmitter

AXG4A

Optional Code	Description
EG4	4 pcs. of waterproof gland, and a blanking plug
EG5	5 pcs. of waterproof gland
EU4	4 pcs. of waterproof gland with union joint, and a blanking plug
EU5	5 pcs. of waterproof gland with union joint
EP4	4 pcs. of plastic gland, and a blanking plug
EP5	5 pcs. of plastic gland

Remote Transmitter

AXG1A

Optional Code	Description
EW5	5 pcs. of waterproof gland with JIS G3/4 female
EG5	5 pcs. of waterproof gland
EU5	5 pcs. of waterproof gland with union joint
EP5	5 pcs. of plastic gland

Remote Transmitter
AXFA11G

Optional Code	Description
EW	5 pcs. of waterproof gland with JIS G3/4 female
EG	5 pcs. of waterproof gland
EU	5 pcs. of waterproof gland with union joint
EP	5 pcs. of plastic gland

IMPORTANT

Apply a blanking plug to the unused cable entry. Seal the cable entries properly comply to usage state.

4.3.1 When waterproof property is necessary (Wiring using waterproof glands)

IMPORTANT

To prevent water or condensation from entering the transmitter housing, waterproof glands are recommended. Do not over-tighten the glands or damage to the cables may result. Tightness of the gland can be checked by confirming that the cable is held firmly in place.

For working on the conduit or the flexible tubes (G1/2), remove the waterproof gland and attach them directly to the cable entry.

(1) Waterproof Gland

Integral Flowmeter

Optional code: EG2, EG3

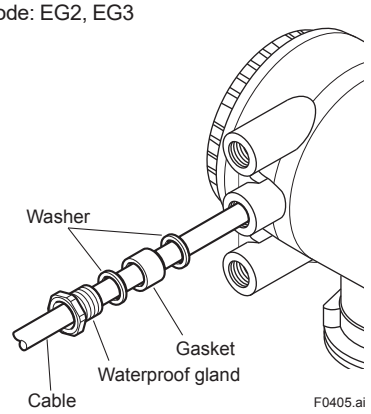

Remote Sensor

Optional code: EG

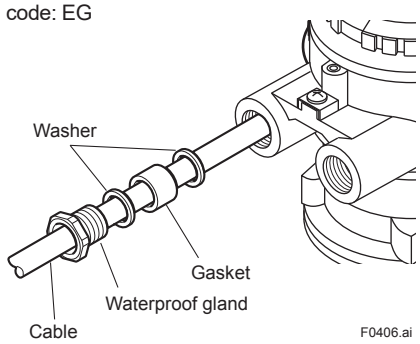

Remote Transmitter (AXG4A)

Optional code: EG4, EG5

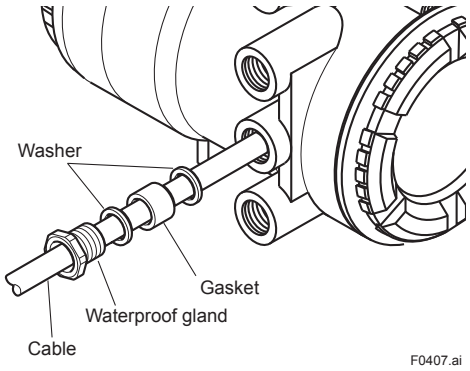

Remote Transmitter (AXG1A/AXFA11)

Optional code: EG5 (AXG1A), EG (AXFA11)

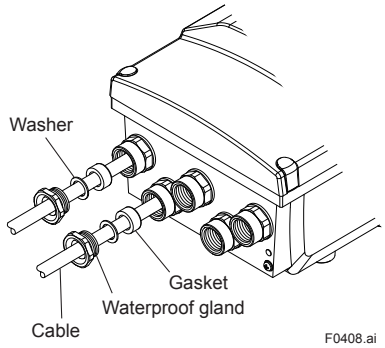

(2) Waterproof Gland with Union Joint

Integral Flowmeter

Optional code: EU2, EU3

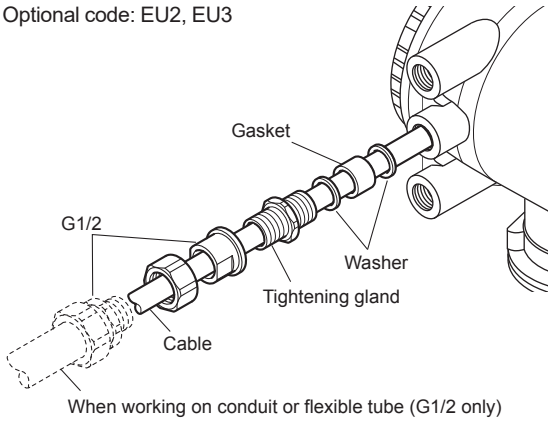

F0409.ai

Remote Sensor

Optional code: EU

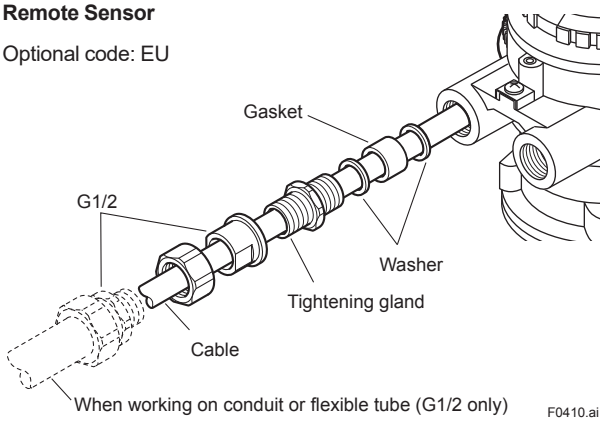

F0410.ai

Remote Transmitter (AXG4A)

Optional code: EU4, EU5

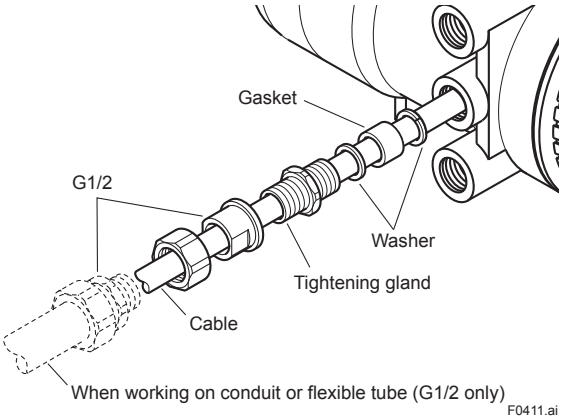

F0411.ai

Remote Transmitter (AXG1A/AXFA11)

Optional code: EU5 (AXG1A), EU (AXFA11)

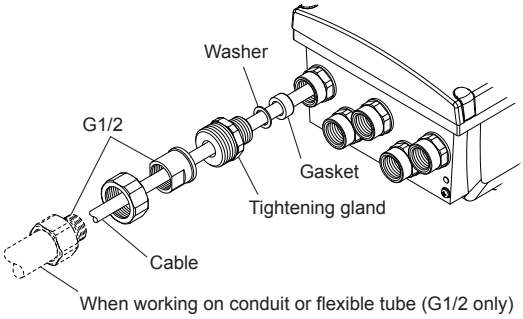

F0412.ai

(3) Plastic Gland

Integral Flowmeter

Optional code: EP2, EP3

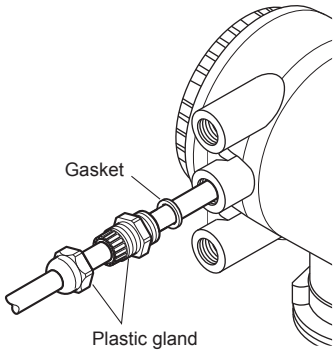

F0413.ai

Remote Sensor

Optional code: EP

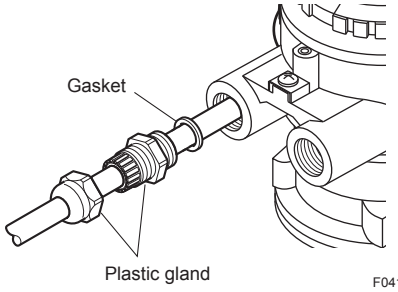

F0414.ai

Remote Transmitter (AXG4A)

Optional code: EP4, EP5

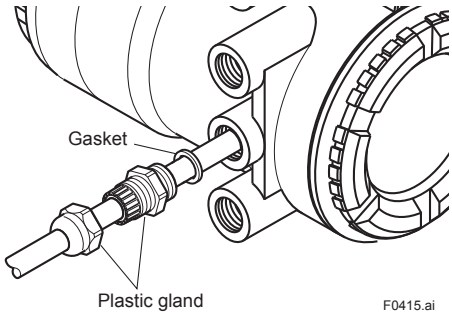

F0415.ai

Remote Transmitter (AXG1A/AXFA11)

Optional code: EP5 (AXG1A), EP (AXFA11)

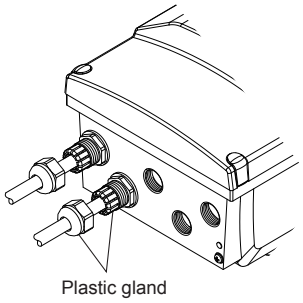

F0416.ai

(4) Waterproof Gland with JIS G3/4 Female

Remote Sensor

Optional code: EW

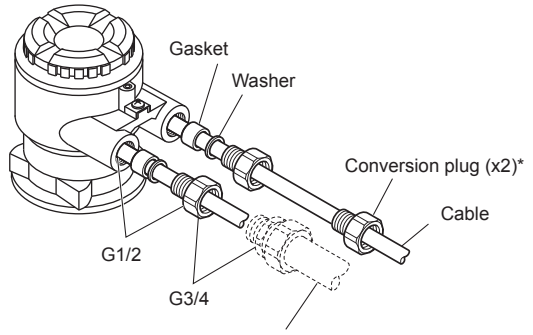

* When connecting G1/2, remove the conversion plug and connect directly to cable entry.

F0417.ai

Remote Transmitter (AXG1A/AXFA11)

Optional code: EW5 (AXG1A), EW (AXFA11)

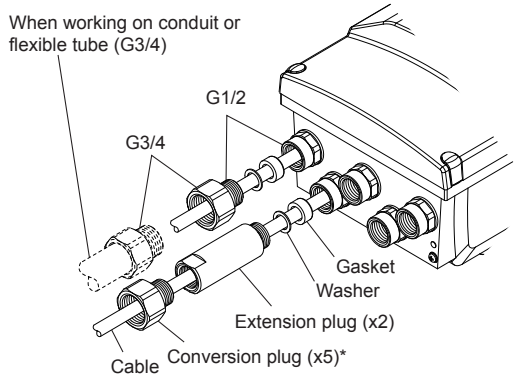

* When connecting G1/2, remove the conversion plug and connect directly to cable entry.

F0418.ai

4.3.2 Conduit Wiring

When wiring the conduits, utilize the waterproof gland to prevent water from flowing in through the conduit. Place the conduit pipe on an angle as shown in the following figures.
Install a drain valve at the low end of the vertical pipe, and open the valve regularly.
To prevent noise, do not use the same conduit for signal cable and power cable.

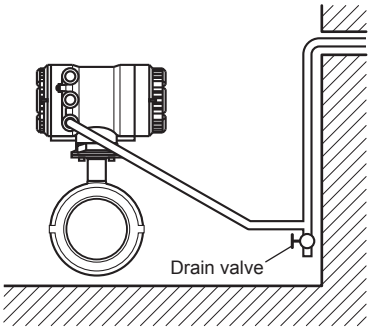

F0419.ai

Figure 4.3.1 Integral Flowmeter

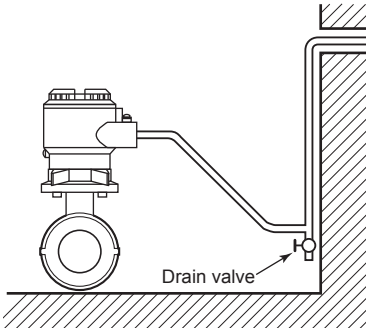

F0420.ai

Figure 4.3.2 Remote Sensor

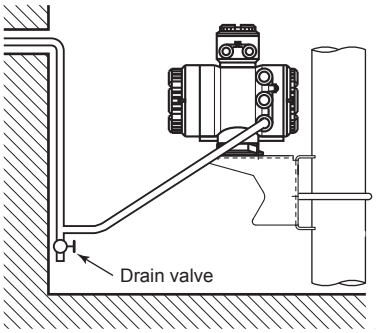

F0421.ai

Figure 4.3.3 Remote Transmitter (AXG4A)

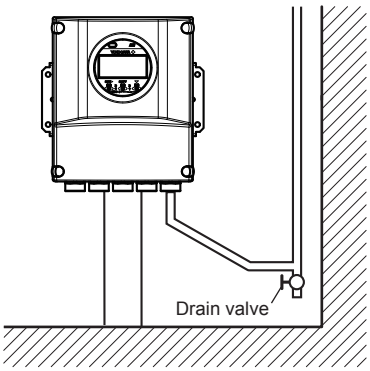

F0422.ai

Figure 4.3.4 Remote Transmitter (AXG1A/AXFA11)

4.4 Connecting to External Products of Integral Flowmeter and Remote Transmitter

4.4.1 Wiring Precautions for Power Supply Cables

When connecting to the power supply, observe the points below. Failure to comply with these warnings may result in an electric shock or damage to the product.

WARNING

- Ensure that the power supply is off in order to prevent electric shocks.
- When opening the cover, wait for more than 20 minutes after turning off the power.
- Ensure the protective grounding terminal is grounded before turning on the power.
- Terminate all the cable finish with round or rod shaped crimp terminal (depending on the shape of the terminal block) with insulation cover, and connect them reliably.
- Install an external switch or circuit breaker as a means to turn the power off (capacitance: 15A, conforming to IEC60947-1, IEC60947-2 and IEC60947-3).
  Locate this switch either near the product or in other places facilitating easy operation. Affix a “Power Off Equipment” label to this external switch or circuit breaker.

WARNING

For explosion protection type products, please be sure to read the user's manual of the applicable explosion protection type as listed in Table 1.1.

Wiring Procedure

1. Check the product’s power is off, then remove the terminal cover (transparent).
2. Wire the power supply cable and the functional grounding cable to the power supply terminals.
3. Install the terminal cover.

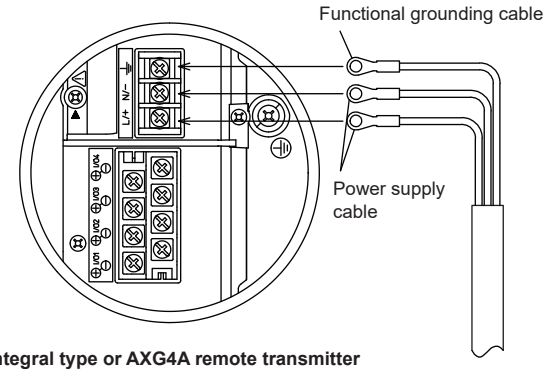

Integral type or AXG4A remote transmitter M4 Screw Type

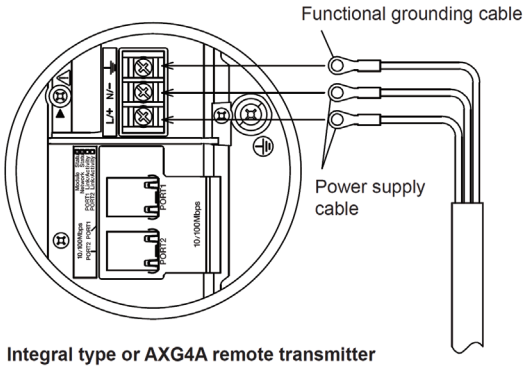

Integral type or AXG4A remote transmitter M4 Screw Type for EtherNet/IP communication type

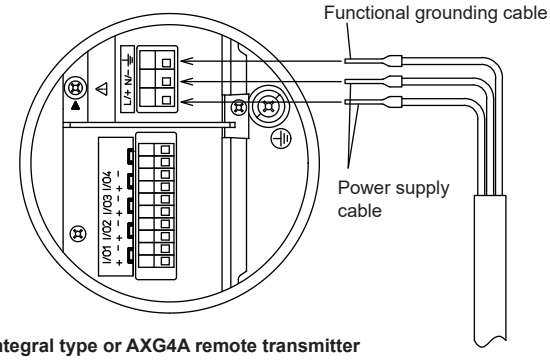

Integral type or AXG4A remote transmitter Clamp Type

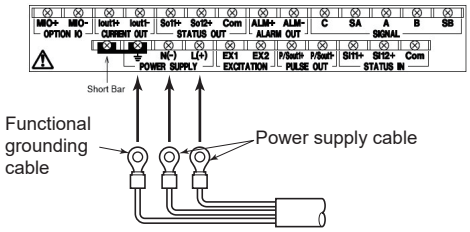

AXG1A remote transmitter

F0423.ai

Figure 4.4.1 Power Cable Wiring

CAUTION

When wiring terminal for clamp type with a lever (explosion protection type), care the following points.

- Use opening/closing tool with a tip width of 3.5 mm or less.
- Push the lever opening/closing tool straight against the lever.
- Do not push over the stopper with pushing the lever.

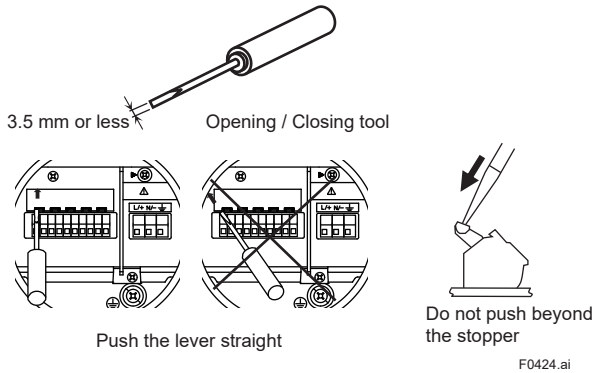

4.4.2 DC Power Connection

When using DC power as the power supply for the transmitter, pay attention to the following points.

(1) Connecting Power Supply

IMPORTANT

Do not connect power supply with reversed polarities.
L/+ terminal: connect to + (power supply)
N/– terminal: connect to - (power supply)

IMPORTANT

For the 24 V power supply version (power supply code -2), power supply with 100 to 240 V AC and 100 to 120 V DC cannot be connected.
The wrong connection results in a damage to the transmitter.

(2) Required Power Supply Voltages

IMPORTANT

- For the 24 V power supply version (power supply code -2), the specification of 24 V (–15% to +20%) is the supply voltage between the terminals on the transmitter. Because of voltage drop by cable resisitance, the supply voltage must be applied within the range of Figure 4.4.2.
- For AXFA11, read the applicable user's manual as listed in Table 1.1.

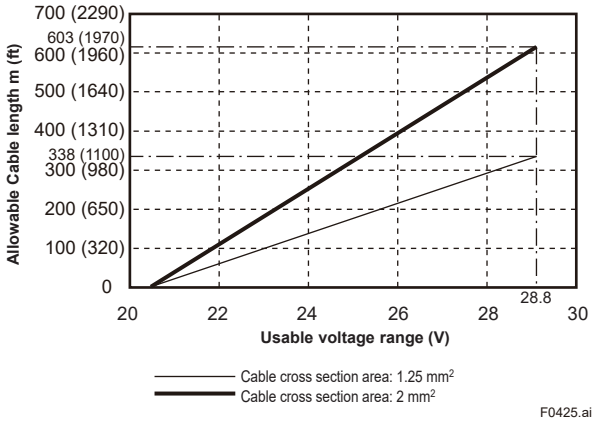

Figure 4.4.2 Supply Voltage and Power Supply Cable Length (Integral Flowmeter and AXG4A Remote Transmitter)

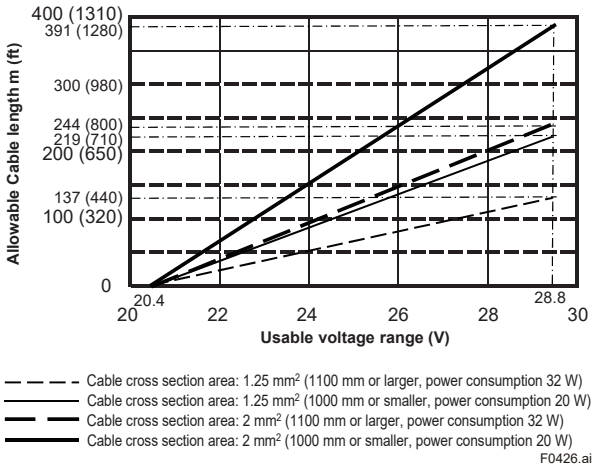

Figure 4.4.3 Supply Voltage and Power Supply Cable Length (AXG1A Remote Transmitter)

(3) Setting Power Supply Frequency

IMPORTANT

Set the local commercial power frequency in order to eliminate the effect of induction noise from the power supply.
For detailed parameter setting, read the user's manual of the applicable communication type (for AXG/AXG4A/AXG1A) or the hardware/software edition (for AXFA11) as listed in Table 1.1.

Display Menu Path (AXG/AXG4A/AXG1A):
Device setup ▶ Detailed setup ▶ AUX calculation ▶ Power sync on/off
Device setup ▶ Detailed setup ▶ AUX calculation ▶ Set power freq

4.4.3 Grounding

WARNING

For the wiring of protective grounding, terminate the cable finish with round shaped crimp terminal with insulation cover (for M4 screw), and connect it to the protective grounding terminal reliably.

CAUTION

- The grounding should satisfy grounding resistance requirement, 100 Ω or less (Class D grounding).
- For explosion protection type, the grounding must satisfy the domestic electrical requirements as regulated in each country

IMPORTANT

A lightning protector is built-in for integral flowmeter or AXG4A/AXG1A remote transmitter. When the lightning protection is needed, the ground should satisfy Class C requirements (grounding resistance, 10 Ω or less).
For AXFA11, read the applicable user's manual as listed in Table 1.1.

- The protective grounding terminals ⏚ are located on the inside and outside of the terminal area.
  Either terminal can be used.
- Use 600 V vinyl insulation wires as the grounding wires.

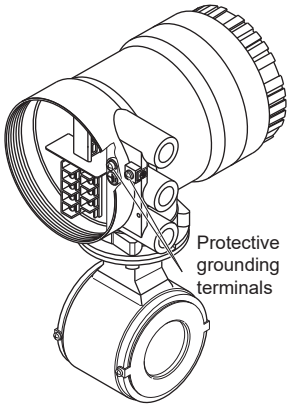

Figure 4.4.4 Position of Protective Grounding Terminal (Integral Type and AXG4A Remote Transmitter)

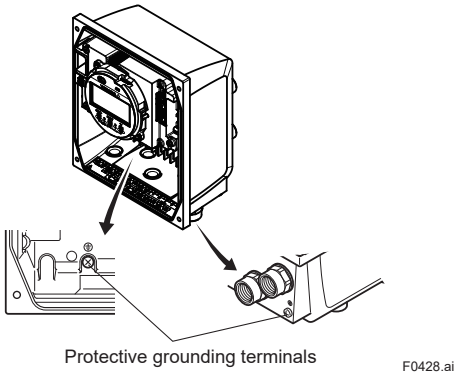

Figure 4.4.5 Position of Protective Grounding Terminal (AXG1A Remote Transmitter)

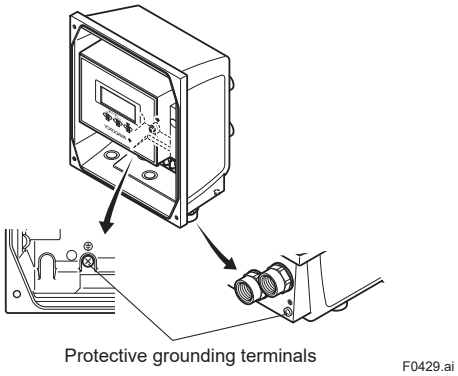

Figure 4.4.6 Position of Protective Grounding Terminal (AXFA11 Remote Transmitter)

IMPORTANT

Improper grounding may result in an adverse effect on the flow measurement. Ensure that the product is properly grounded.

The electromotive force of the magnetic flowmeter is minute and it is easily affected by noise, and the reference electric potential is the same as that of the measuring fluid. Therefore, the reference electric potential (terminal potential) of the sensor and transmitter also need to be the same as that of the measuring fluid. Moreover, the potential must be the same as the ground. The magnetic flowmeter is equipped with an grounding ring that makes a connection with the charge of the measured fluid for grounding and protects the lining. Grounding rings are supplied with the products when specified with dedicated optional code.

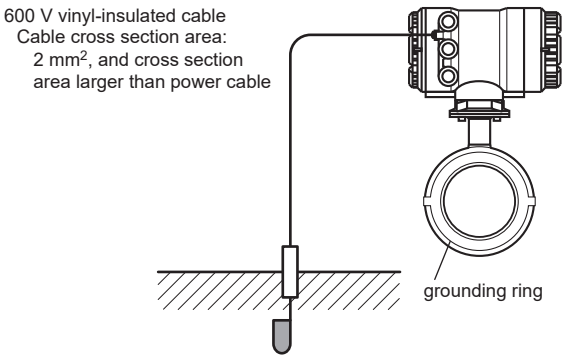

Grounding Resistance: 10 Ω or less (Class C requirements)
Note: When lightning protection performance by the built-in lightning protectors is not required, grounding resistance 100 Ω or less (Class D requirements) can be applied.

F0430.ai

CAUTION

- The grounding should satisfy grounding resistance requirement, 100 Ω or less (Class D grounding).
- For explosion protection type, the grounding must satisfy the domestic electrical requirements as regulated in each country.

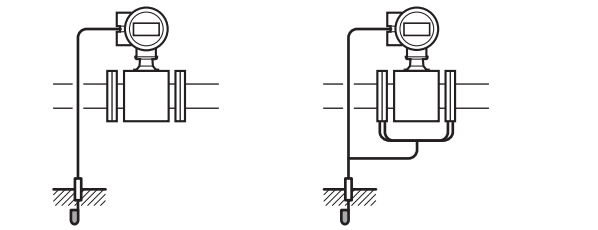

In case grounding rings are used.

In case grounding rings are not used. (Available only for metal piping)

F0431.ai

Figure 4.4.7 Grounding (Integral Flowmeter)

4.4.4 Connecting to External Products

WARNING

- Before wiring with external products, be sure to turn off the power supply of the magnetic flowmeter.
- Be sure the power supply of the external products is turned off, and then start wiring.

Read Section 4.6 for connection to external products.

4.4.5 Wiring Procedures

(1) For Integral Flowmeter and AXG4A Remote Transmitter

1) Removing the Cover

Loosen the cover locking screw (1 and 3) (See Figure 4.4.7 and Figure 4.4.8) clockwise using a hexagonal wrench (nominal size 3) to unlock the cover. Upon shipment from the manufacturing plant, the cover is unlocked. Hold the flowmeter with your hand and remove the cover by turning it in the direction of the arrow as shown below.

WARNING

- When opening and closing the cover, be sure to handle the cover carefully so that there are no damage and foreign matter adhesion at its threads and O-ring. Keep checking their condition and clean the threads in case of adhering the foreign matter.
- Replace the cover in case the treads receive damages.
- Replace the O-ring if there is any scarring or transformation. And apply silicone based grease at the O-ring in case of the shortage and exhaustion of grease.

IMPORTANT

- When closing the cover, close it with both hands until the cover does not turn in order to bring the housing and cover into tight contact.
- Tighten while confirming that the cover rotates smoothly.

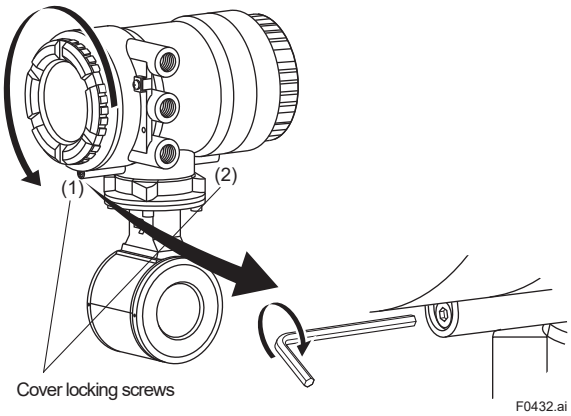

F0432.ai

Figure 4.4.8 Removing the Terminal Box Cover for Integral Flowmeter

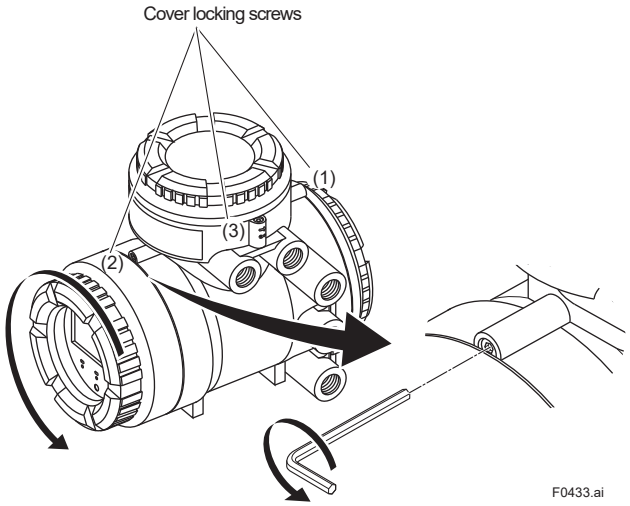

Figure 4.4.9 Removing the Terminal Box Cover for AXG4A Remote Transmitter

2) Terminal Configuration

When the cover is removed, the connection terminals will be visible.

The description of the terminal symbols is shown in Figure 4.4.9 or Figure 4.4.10.

3) Wiring Procedure

1. Check the product's power is off.
2. Wire the signal cable and excitation cable to each terminal.
3. Install the terminal cover.

4) Installing the Cover

Install the cover to the flowmeter by turning it clockwise. Tighten the cover locking screw (1 and 3) (See Figure 4.4.7 and Figure 4.4.8) counterclockwise using a hexagonal wrench (nominal size 3) to lock the cover.

(2) Terminal Configuration (Integral Flowmeter and AXG4A Transmitter)

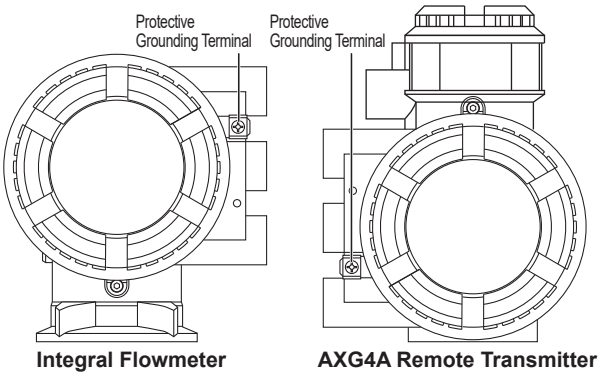

Integral Type/AXG4A Remote Transmitter:

<To be wired to Power Supply and I/Os>

M4 Screw Type

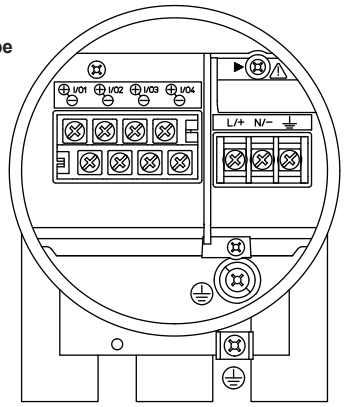

Clamp Type

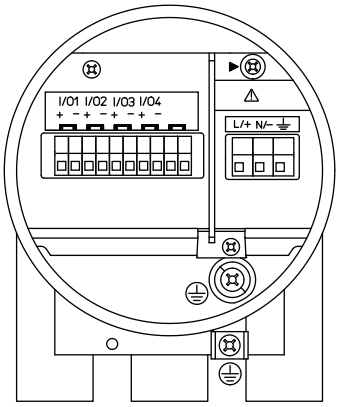

Terminal Symbol	Description
▶	Shorting Screw (Need to be fixed for normal operation)
⏚	Functional Grounding
N/- L/+	Power Supply
I/O4 - I/O4 + I/O3 - I/O3 + I/O2 - I/O2 + I/O1 - I/O1 +	Refer to Input/Output Table
⊕	Protective Grounding (Inside and outside of the terminal box)

F0434.ai

Figure 4.4.10 Terminal Configuration (Integral Flowmeter and AXG4A Remote Transmitter)

<To be wired to Power Supply and PORTs>

M4 Screw Type for EtherNet/IP communication

Communication and I/O code: P0

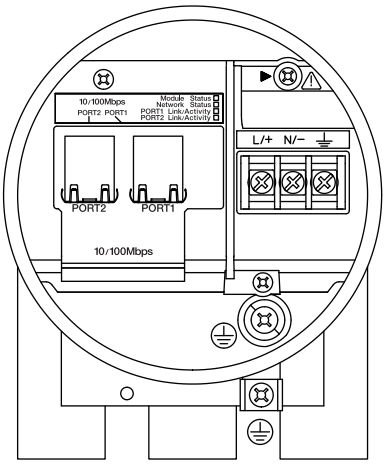

Terminal Symbol	Description
▶	Shorting Screw (Need to be fixed for normal operation)
⏚	Functional Grounding
N/- **L/+**	Power Supply
PORT1 **PORT2**	Ethernet port (RJ-45, 2 ports)
⊕	Protective Grounding (Inside and outside of the terminal box)

F0435.ai

Wiring Procedure for Ethernet communication cable

1) Push the cable through the cable entry.

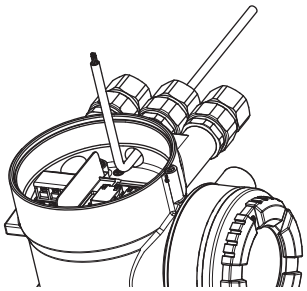

F0436.ai

2) Install a RJ-45 connector.

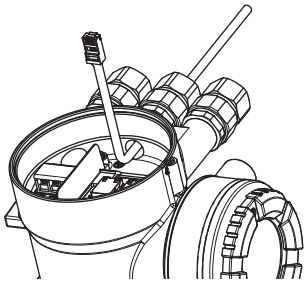

F0437.ai

3) Plug in the RJ-45-connector.

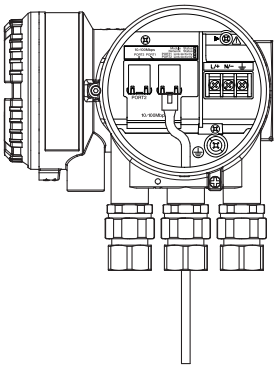

F0438.ai

The same procedure for PORT2.

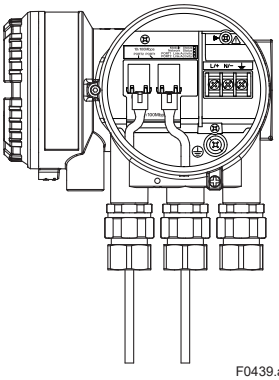

F0439.ai

AXG4A Remote Transmitter:

<To be wired to Remote Sensor>

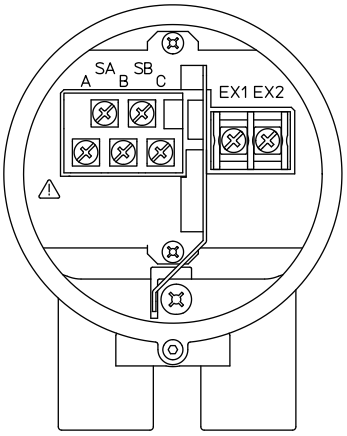

Terminal Symbol	Description
SA **SB** **A** **B** **C**	Flow Signal Input
EX1 **EX2**	Excitation Current Output

F0440.ai

Figure 4.4.11 Terminal Configuration (AXG4A Remote Transmitter)

■ BRAIN, HART

Communication and I/O code		Connection Terminal			
BRAIN	HART	I/O1	I/O2	I/O3	I/O4
DA	JA	Iout1 Active	P/Sout1 Passive	-	-
DB	JB	Iout1 Active	P/Sout1 Passive	P/Sout2 Passive	Iout2 Active
DC	JC	Iout1 Active	P/Sout1 Passive	Sin No-voltage	Iout2 Active
DD	JD	Iout1 Active	P/Sout1 Passive	Sout Passive	P/Sout2 Passive
DE	JE	Iout1 Active	P/Sout1 Passive	Sin No-voltage	P/Sout2 Passive
DF	JF	Iout1 Active	P/Sout1 Passive	Sin No-voltage	P/Sout2 Active (With resistor)
DG	JG	Iout1 Active	P/Sout1 Passive	Sin No-voltage	P/Sout2 Active (Without resistor)
DH	JH	Iout1 Active	P/Sout1 Passive	Iout2 Passive	Iin Active
DJ	JJ	Iout1 Active	P/Sout1 Passive	P/Sout2 Passive	Iin Active
DK	JK	Iout1 Active	P/Sout1 Passive	Sin No-voltage	Iin Active
DP	JP	Iout1 Passive	P/Sout1 Passive	Iout2 Passive	-
DQ	JQ	Iout1 Passive	P/Sout1 Passive	Iout2 Passive	P/Sout2 Passive
DR	JR	Iout1 Passive	P/Sout1 Passive (NAMUR)	Iout2 Passive	-
DS	JS	Iout1 Passive	P/Sout1 Passive (NAMUR)	Iout2 Passive	P/Sout2 Passive (NAMUR)
DT	JT	Iout1 Passive	P/Sout1 Passive	-	-

■ Modbus

Communication and I/O code	Connection Terminal					
	I/O1	I/O2	I/O3 +	I/O3 -	I/O4 +	I/O4 -
M0	-	P/Sout1 Passive	-	Modbus C(Common)	Modbus B(D1)	Modbus A(D0)
M2	Iin Active					
M6	Iout2 Active					

■ FOUNDATION fieldbus

Communication and I/O code	Connection Terminal			
	I/O1	I/O2	I/O3	I/O4
F0	Fieldbus Passive	P/Sout Passive	-	-

■ PROFIBUS PA

Communication and I/O code	Connection Terminal			
	I/O1	I/O2	I/O3	I/O4
G0	Fieldbus Passive	P/Sout Passive	-	-

■ EhterNet/IP

Communication and I/O Code	Connection Terminal	
P0	PORT1	PORT2

Iout1: Current output with BRAIN/HART communication
Iout2: Current output
Iin: Current input
P/Sout1: Pulse output or status output
P/Sout2: Pulse output or status output
Sin: Status input
Sout: Status output
Modbus: Modbus communication
Fieldbus: FOUNDATION fieldbus communication (F0)
PROFIBUS PA communication (G0)
PORT1/PORT2: EtherNet/IP communication

The position of Communication and I/O code:
Integral Type:
AXG□□□-□□□□□□□□□□□□□□□-□■■□□
Remote Transmitter:
AXG4A-□□□□□□□■■□□

(3) For AXG1A Remote Transmitter

1) Removing the Cover

While supporting the front of the cover with your hand, flip the connecting screw protective cover over, and remove the four connecting screws.

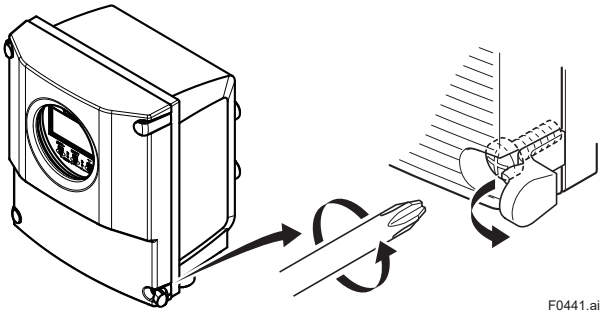

Figure 4.4.12 Removing the Front Cover (AXG1A Remote Transmitter)

2) Terminal Configuration

When the cover is removed, the connection terminals will be visible as shown below.

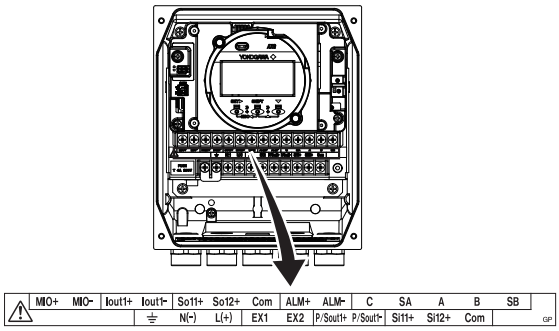

Figure 4.4.13 Terminal Configuration (AXG1A Remote Transmitter)

Table 4.4.1 Terminal Symbols (AXG1A Remote Transmitter)

Terminal Symbol		Description
SIGNAL	C SA A B SB	Flow signal input
ALARM OUT	ALM+ ALM-	Alarm output
STATUS OUT	So11+ So12+ COM	Status output (Two outputs)
CURRENT OUT	Iout1+ Iout1-	Current output 4−20 mA DC
OPTION IO	MIO+ MIO-	Option input/output
STATUS IN	Si11+ Si12+ COM	Status input (Two inputs)
PULSE OUT	P/Sout1+ P/Sout1-	Pulse output
EXCITATION	EX1 EX2	Excitation current output
POWER SUPPLY	N(-) L(+)	Power supply
	⏚	Functional grounding
	⏚	Protective grounding (Outside of the terminal)

■ BRAIN, HART

Communication and I/O code		Connection Terminal					
BRAIN	HART	ALM Passive	So11,So12 Passive	Iout1 Active	MIO	Si11,Si12 No-voltage	P/Sout1 Passive
D0	J0	●	●	●	-	●	●
D2	J2	●	●	●	Iin Active	●	●
D3	J3	●	●	●	P/Sout2 Passive	●	●
D4	J4	●	●	●	P/Sout2 Active (Without resistor)	●	●
D5	J5	●	●	●	P/Sout2 Active (With resistor)	●	●
D6	J6	●	●	●	Iout2 Active	●	●

Iout1: Current output with BRAIN/HART communication
Iout2: Current output
Iin: Current input
P/Sout1: Pulse output or status output
P/Sout2: Pulse output or status output
Si11, Si12: Status input (Two inputs)
So11, So12: Status output (Two outputs)
The position of Communication and I/O code:
Remote Transmitter:
AXG1A-G000□□□■■1□

IMPORTANT

Do not wire the terminal without terminal symbols in terminal layout labels.

3) Installing the Cover

While supporting the front of the cover with your hand, flip the connecting screw protective cover over, and tighten the four connecting screws.

(4) For AXFA11 Remote Transmitter

1) Removing the Cover

While supporting the front of the cover with your hand, flip the connecting screw protective cover over, and remove the four connecting screws.

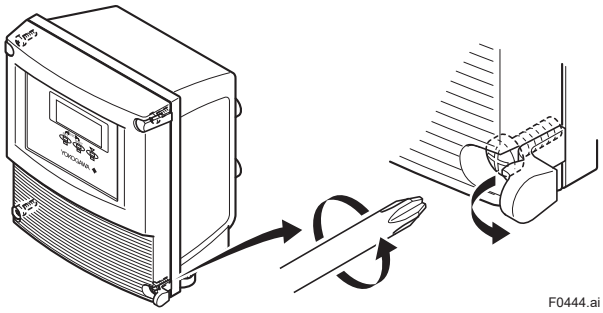

Figure 4.4.14 Removing the Front Cover (AXFA11 Remote Transmitter)

2) Terminal Configuration

When the cover is removed, the connection terminals will be visible as shown below.

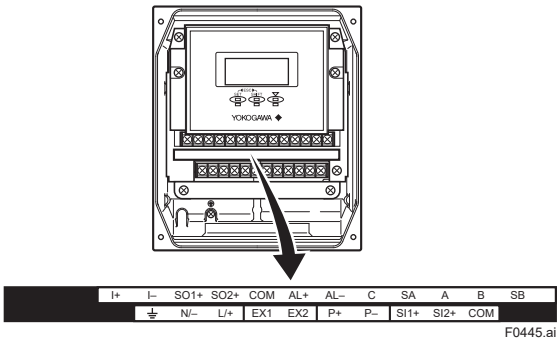

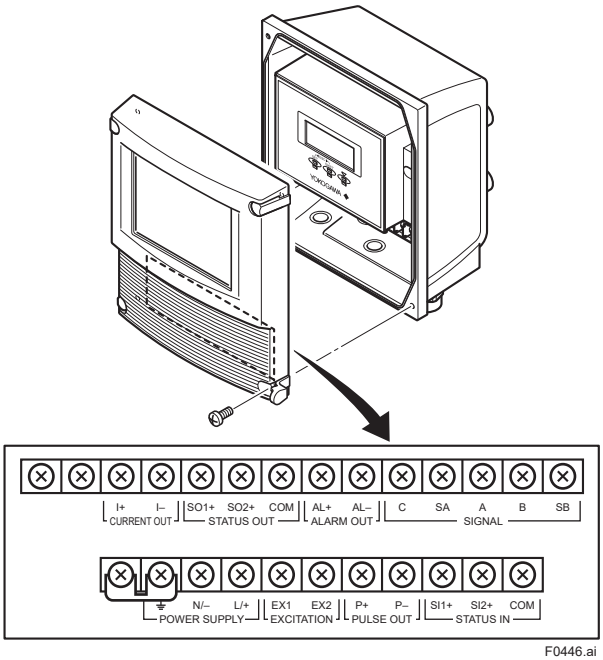

Figure 4.4.15 Terminal Configuration (AXFA11 Remote Transmitter)

Table 4.4.2 Terminal Symbols (AXFA11 Remote Transmitter)

Terminal Symbol		Description
SIGNAL	C SA A B SB	Flow signal input
ALARM OUT	AL+ AL-	Alarm output
STATUS OUT	SO1+ SO2+ COM	Status output (Two outputs)
CURRENT OUT	I+ I-	Current output 4−20 mA DC
STATUS IN	SI1+ SI2+ COM	Status input (Two inputs)
PULSE OUT	P+ P-	Pulse output
EXCITATION	EX1 EX2	Excitation current output
POWER SUPPLY	L /+ N/-	Power supply
	⏚	Functional grounding
	⏚	Protective grounding (Outside of the terminal)

IMPORTANT

Do not wire the terminal without terminal symbols in terminal layout labels.

3) Installing the Cover

While supporting the front of the cover with your hand, flip the connecting screw protective cover over, and tighten the four connecting screws.

4.5 Connecting to Remote Sensor and Remote Transmitter (Sensor Side)

WARNING

For explosion protection type products, please be sure to read the user's manual of the applicable explosion protection type as listed in Table 1.1.

WARNING

Before wiring, be sure that the power supply to magnetic flowmeter has been turned off to prevent an electrical shock.

(1) Removing the Cover

Loosen the cover locking screw (1) (See Figure 4.5.1) clockwise using a hexagonal wrench (nominal size 3) to unlock the cover. Upon shipment from the manufacturing plant, the cover is unlocked. Hold the sensor with your hand and remove the cover by turning it in the direction of the arrow as shown below.

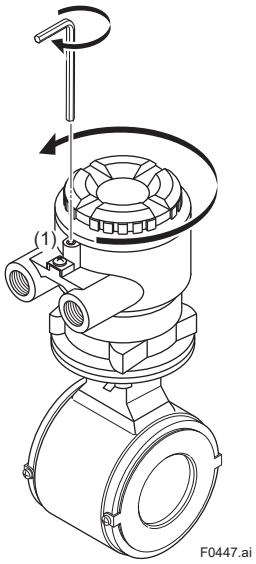

Figure 4.5.1 Removing the Terminal Box Cover (Remote Sensor)

(2) Terminal Configuration

When the cover is removed, the connection terminals will be visible as shown below.

Remote Sensor:

<To be wired to Remote Transmitter>

Non Explosion Protection Use

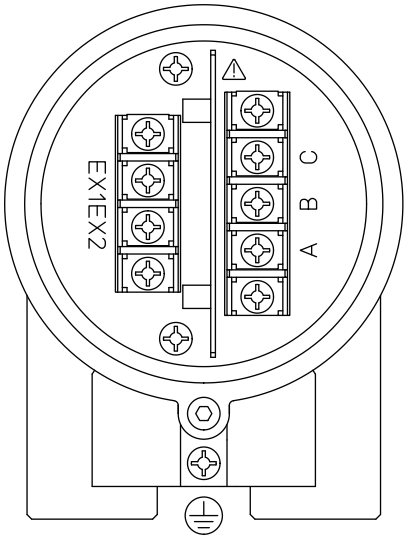

Explosion Protection Use

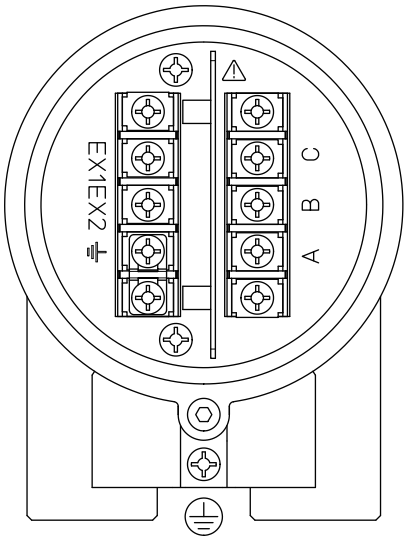

Terminal Symbol	Description
A **B** **C**	Flow Signal Output
EX1 **EX2**	Excitation Current Input
⏚	Protective Grounding (Outside of the terminal box)
⏚	Functional Grounding

F0448.ai

Note: When submersible use or optional code DHC is selected, waterproof glands with union joints and cables are attached.

Figure 4.5.2 Terminal Configuration (Remote Sensor)

(3) Wiring of Remote Sensor and Remote Transmitter

1) Connection with AXG4A Remote Transmitter

Connect wiring as shown in the figure below.

Non Explosion Protection Use

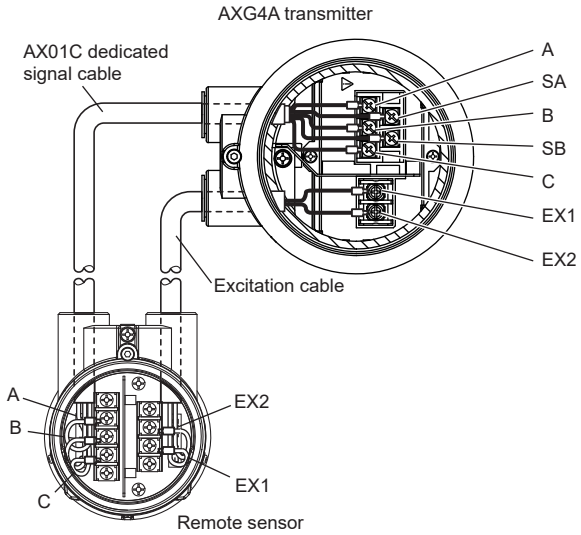

Explosion Protection Use

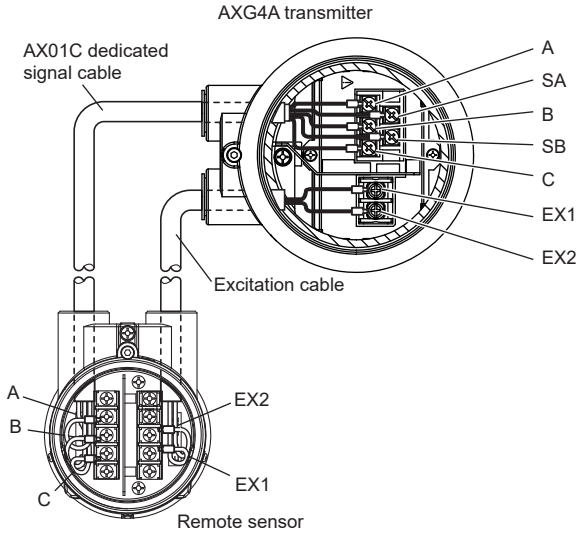

Transmitter	Remote sensor
SA	Taping*
A	A
B	B
SB	Taping*
C	C
EX1	EX1
EX2	EX2

* Individually tape and insulate the shields corresponding to SA and SB on the remote sensor side.

F0449.ai

Figure 4.5.3 Wiring Diagram (AXG4A Remote Transmitter)

2) Connection with AXG1A Remote Transmitter

Connect wiring as shown in the figure below.

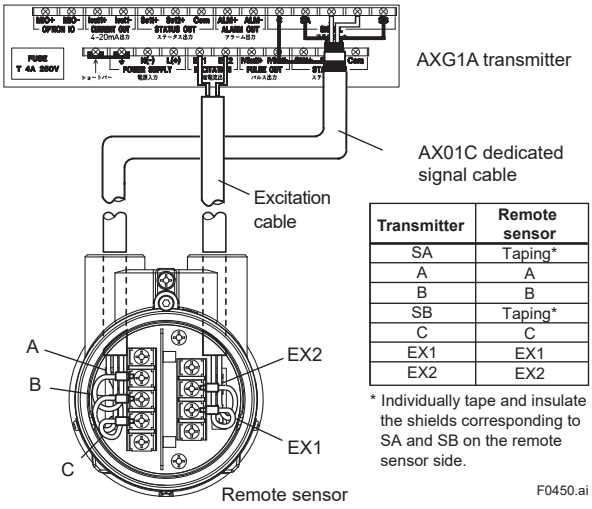

Transmitter	Remote sensor
SA	Taping*
A	A
B	B
SB	Taping*
C	C
EX1	EX1
EX2	EX2

* Individually tape and insulate the shields corresponding to SA and SB on the remote sensor side.

Figure 4.5.4 Wiring Diagram (AXG1A Remote Transmitter)

3) Connection with AXFA11 Remote Transmitter

Connect wiring as shown in the figure below.

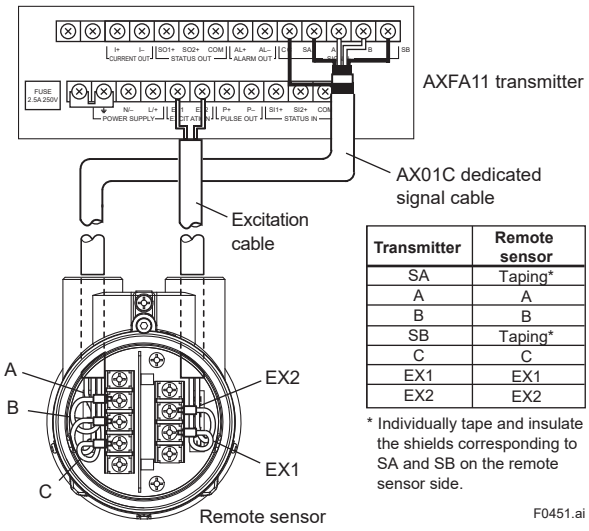

Transmitter	Remote sensor
SA	Taping*
A	A
B	B
SB	Taping*
C	C
EX1	EX1
EX2	EX2

* Individually tape and insulate the shields corresponding to SA and SB on the remote sensor side.

Figure 4.5.5 Wiring Diagram (AXFA11 Remote Transmitter)

(4) Grounding

WARNING

For the wiring of protective grounding, terminate the cable finish with round shaped crimp terminal with insulation cover (for M4 screw), and connect it to the proctective grounding terminal reliably.

CAUTION

- The grounding should satisfy Class D requirements (grounding resistance, 100 Ω or less).
- For explosion protection type, the grounding must satisfy the domestic electrical requirements as regulated in each country.

IMPORTANT

Improper grounding may result in an adverse effect on the flow measurement. Ensure that the product is properly grounded.

The electromotive force of the magnetic flowmeter is minute and it is easy to be affected by noise. Therefore, be sure to ground according to Figure 4.5.6. The reliable grounding equalize the reference electric potentials (terminal potential) of the sensor and the transmitter, the measuring fluid potential and the ground potential, and then reduce the affection by noise.
The grounding rings make a connection between the measured fluid and the ground and protects the flared face of lining.
Grounding rings are supplied with the products when specified with dedicated optional code.

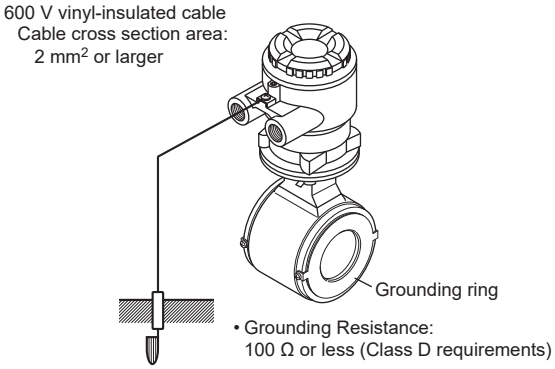

CAUTION

- The grounding should satisfy grounding resistance requirement, 100 Ω or less (Class D grounding).
- For explosion protection type, the grounding must satisfy the domestic electrical requirements as regulated in each country.

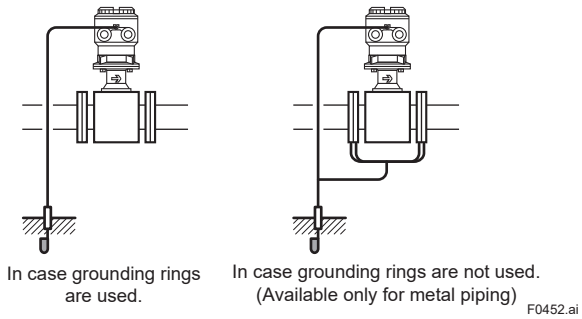

Figure 4.5.6 Grounding (Remote Sensor)

(5) Installing the Cover

Install the cover to the terminal box by turning it clockwise. Tighten the cover locking screw (1) (See Figure 4.5.1) counterclockwise using a hexagonal wrench (nominal size 3) to lock the cover.

WARNING

- When opening and closing the cover, be sure to handle the cover carefully so that there are no damage and foreign matter adhesion at its threads and O-ring. Keep checking their condition and clean the threads in case of adhering the foreign matter.
- Replace the cover in case the treads receive damages.
- Replace the O-ring if there is any scarring or transformation. And apply silicone based grease at the O-ring in case of the shortage and exhaustion of grease.

IMPORTANT

- When closing the cover, close it with both hands until the cover does not turn in order to bring the housing and cover into tight contact.
- Tighten while confirming that the cover rotates smoothly.

4.6 Input and Output

This section provides descriptions of the specificaiton and wiring of the input and output signals.
In accordance with the communication and I/O code specified, the function assigned to each terminal is different. For the specification and terminal configuration, read Section 4.4 and the applicable general specifications as listed in Table 1.1.
For AXFA11, read the applicable user's manual as listed in Table 1.1.

(1) Output Signal

Galvanic isolation:

All circuits for inputs, outputs and power supply are galvanically isolated from each other.

<table>
<tr><th>Output signal type</th><th>Specification</th></tr>
<tr><td>Active current output [Iout]:</td><td>One or two current outputs are available depending on the specification.
Depending on the measured value, the active current output delivers 4 to 20 mA.
<table>
<tr><td>Output current</td><td>4 to 20 mA DC</td></tr>
<tr><td>Load resistance</td><td>750 Ω or less (Integral flowmeter or AXG4A),
1 kΩ (AXG1A)</td></tr>
<tr><td>Load resistance for BRAIN communication</td><td>250 to 450 Ω</td></tr>
<tr><td>Load resistance for HART communication</td><td>230 to 600 Ω</td></tr>
<tr><td>Current output accuracy</td><td>±8 μA (±0.05% of span)</td></tr>
</table>
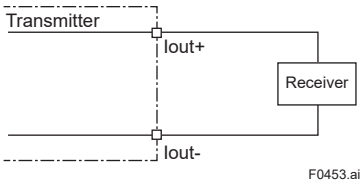

Figure 4.6.1 Connection diagram: Active current output [Iout]</td></tr>
<tr><td>Passive current output [Iout]:</td><td>Current output: 4 to 20 mA
<table>
<tr><td>Output current</td><td>4 to 20 mA DC</td></tr>
<tr><td>External power supply
(Communication and I/O code D#, J#)</td><td>10.5 to 32 V DC (#: H)
10.5 to 30 V DC (#: P to T)</td></tr>
<tr><td>Load resistance
(Communication and I/O code D#, J#)</td><td>911 Ω or less (#: H)
826 Ω or less (#: P to T)</td></tr>
<tr><td>Load resistance for BRAIN communication</td><td>250 to 450 Ω</td></tr>
<tr><td>Load resistance for HART communication</td><td>230 to 600 Ω</td></tr>
<tr><td>Current output accuracy</td><td>±8 μA (±0.05% of span)</td></tr>
</table>
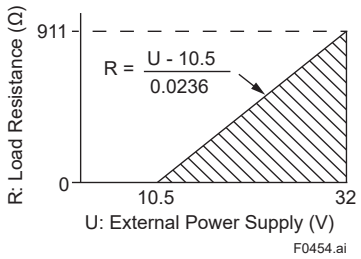

Figure 4.6.2 Load Resistance as External Power Supply

Figure 4.6.2 shows the relation between external power supply and load resistance. The higher supply voltage allows the higher load resistance.

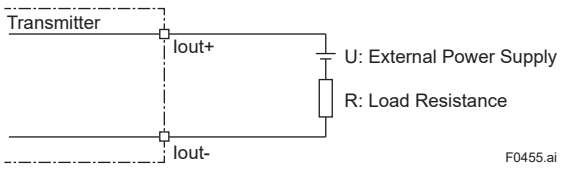

Figure 4.6.3 Connection diagram: Passive current output [Iout]</td></tr>
</table>

Output signal type	Specification
Active pulse output [P/Sout]:	**Connection of an electronic counter** Observe that maximum allowable voltage and voltage polarity are correct when wiring.

Load resistance	1 kΩ or more
Internal power supply	24 V DC ±20%
Maximum pulse rate	10,000 pulses/s
Maximum frequency output rate	12,500 Hz

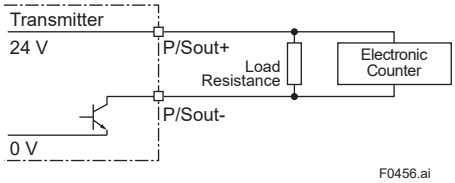

Figure 4.6.4 Connection diagram: Active pulse output [P/Sout] (Electronic counter)

Connection of an electromechanical counter

Maximum current	150 mA or less
Average current	30 mA or less
Internal power supply	24 V DC ±20%
Maximum pulse rate	2 pulses/s
Pulse width	20, 33, 50, 100 ms

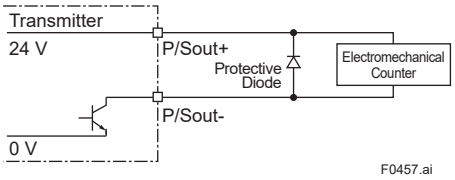

Figure 4.6.5 Connection diagram: Active pulse output [P/Sout] (Electromechanical counter)

When using electromechanical counter, select “For magnetic counter” from the following parameter.
For detailed parameter setting, read the user’s manual of the applicable communication type as listed in Table 1.1.

Display Menu Path (AXG/AXG4A/AXG1A):
Device setup ►Detailed setup ►Pulse/Status out ►PO2/SO2 ►Active pulse

Active pulse output [P/Sout] with internal resistor:

Internal power supply	24 V DC ±20%
Internal pull-up resistor	2.2 kΩ
Maximum pulse rate	10,000 pulses/s
Maximum frequency output rate	12,500 Hz

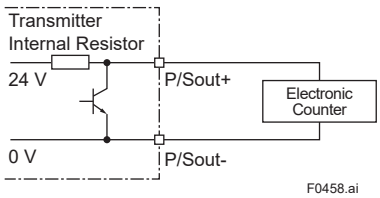

Figure 4.6.6 Connection diagram: Active pulse output [P/Sout] (with internal resistor)

<table>
<tr><th>Output signal type</th><th>Specification</th></tr>
<tr><td>Passive pulse output [P/Sout]:</td><td>
Connection of an electronic counter
Maximum voltage and correct polarity must be observed for wiring.
<table>
<tr><td>Maximum load current</td><td>200 mA or less</td></tr>
<tr><td>Power supply</td><td>30 V DC or less</td></tr>
<tr><td>Maximum pulse rate</td><td>10,000 pulses/s</td></tr>
<tr><td>Maximum frequency output rate</td><td>12,500 Hz</td></tr>
</table>
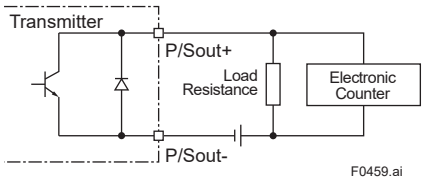

Figure 4.6.7 Connection diagram: Passive pulse output [P/Sout] (Electronic counter)

Connection of an electromechanical counter
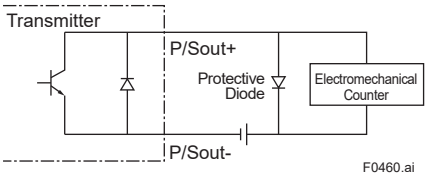

Figure 4.6.8 Connection diagram: Passive pulse output [P/Sout] (Electromechanical counter)
</td></tr>
<tr><td>Passive Pulse output [P/Sout] NAMUR:</td><td>
According to EN 60947-5-6
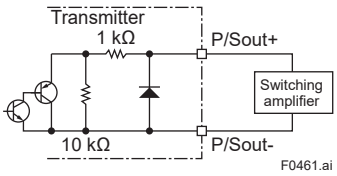

Figure 4.6.9 Connection diagram: Passive pulse output [P/Sout] (NAMUR)
</td></tr>
<tr><td>Active status output [P/Sout]:</td><td>
Because of connecting to a transisiter, observe that maximum allowable current, voltage polarity and output current level are correct.
<table>
<tr><td>Load resistance (External instruments)</td><td>1 kΩ or more</td></tr>
<tr><td>Internal power supply</td><td>24 V DC ±20%</td></tr>
</table>
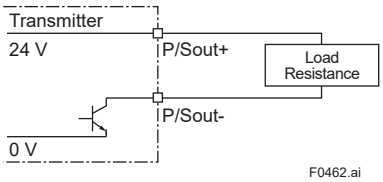

Figure 4.6.10 Connection diagram: Active status output [P/Sout]
</td></tr>
<tr><td>Active status output [P/Sout] with internal resistor:</td><td>
<table>
<tr><td>Internal power supply</td><td>24 V DC ±20%</td></tr>
<tr><td>Internal resistor</td><td>2.2 kΩ</td></tr>
</table>
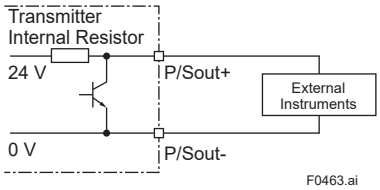

Figure 4.6.11 Connection diagram: Active status output [P/Sout] (with internal resistor)
</td></tr>
</table>

<table>
<tr><th>Output signal type</th><th>Specification</th></tr>
<tr><td>Passive status output [P/Sout or Sout]:
[So11 or So12]:
[ALM]:</td><td>
Because of connecting to a transisiter, observe that maximum allowable voltage, voltage polarity and maximum allowable current are correct.
<table>
<tr><td>Maximum load current</td><td>200 mA or less</td></tr>
<tr><td>Power supply</td><td>30 V DC or less</td></tr>
</table>
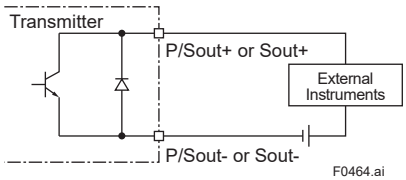

Figure 4.6.12 Connection diagram: Passive status output [P/Sout or Sout]

A relay must be connected in series to switch alternating voltage.
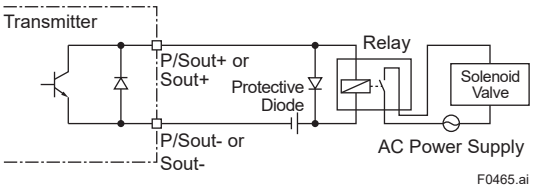

Figure 4.6.13 Connection diagram: Passive status output [P/Sout or Sout] (Solenoid valve)
</td></tr>
<tr><td>Passive status output [P/Sout] NAMUR:</td><td>
According to EN 60947-5-6
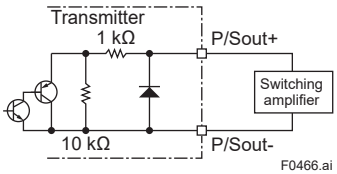

Figure 4.6.14 Passive status output [P/Sout] (NAMUR)
</td></tr>
</table>

(2) Input signals

<table>
<tr><th>Input signal type</th><th>Specification</th></tr>
<tr><td>Active current input [Iin]:</td><td>The active current signal is used for connecting to an external device with a passive current output, e.g. two-wire transmitter.
<table>
<tr><td>Input current</td><td>2.4 to 21.6 mA</td></tr>
<tr><td>Internal power supply</td><td>24 V DC ±20%</td></tr>
<tr><td>Internal load resistance</td><td>160 Ω or less</td></tr>
</table>
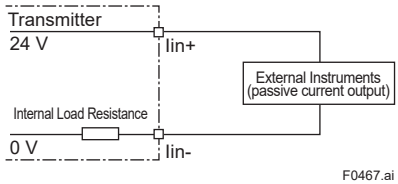

Figure 4.6.15 Connection diagram: Active current signal [Iin]</td></tr>
<tr><td>Status input [Sin]: [Si11 or Si12]:</td><td>IMPORTANT
The status input detects a signal without voltage.
Loading voltage during the switching status "Close" may result in damage on the electrical circuit.

The status input is used for connecting to the following no-voltage contacts.
<table>
<tr><th>Switching status</th><th>Resistance</th></tr>
<tr><td>Closed</td><td>200 Ω or less</td></tr>
<tr><td>Open</td><td>100 kΩ or more</td></tr>
</table>
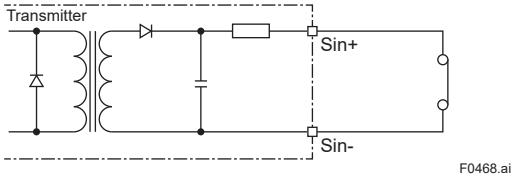

Figure 4.6.16 Connection diagram: Status input [Sin]</td></tr>
</table>

5. Basic Operating Procedures

5.1 Operation by Display unit

The parameter settings from display unit can be carried out using the three IR (infra-red) switches - namely, the [SET] [SHIFT] and [▼] switches. The IR switches enable the user to set parameters from the outside of the glass of the display cover.
This section provides descriptions of basic parameter configuration and operation procesures of IR switches.
This product can be also operated using the dedicated handheld terminal or the FieldMate (Versatile Device Management Wizard). For operation in details, read the user's manual of the applicable communication type (for AXG/AXG4A) or the hardware/software edition (for AXFA11) as listed in Table 1.1.

WARNING

Be sure to enable the write protect function to prevent the overwriting of parameters after finishing parameter setting.
In rare cases, the IR switches may respond unexpectedly to water drops or extraneous substances sticking on the surface of display panel, due to the operating principal. The possibility of malfunction arises after rain or cleaning operation near the place where the flowmeter is installed. Turning on and off the flashlight etc. towards the IR switch may also be a cause of malfunction.
Read Section 6.3 for the hardware write protect function, and the user's manual of applicable communication type as listed in Table 1.1 for the software write protect function.

IMPORTANT

Operate the display unit under the condition where direct sunlight, etc... do not shine to the IR switches directly when the parameter setting operation is carried out.

NOTE

- Always keep the cover closed and operate the setting switches from the outside of the glass window.
- If dirt, dust or other substances surfaces on the glass of display cover, wipe them clean with a soft dry cloth.
- The operation with dirty gloves may cause a switch response error.

NOTE

The language on the display is set to "English" as default at the factory shipment. Select the adequate language referring to the Subsection 5.2.2. The menu pass of the display on this manual is selected to "English".

5.2 Display and Basic Configuration

The display unit of AXG Integral Flowmeter and AXG4A/AXG1A Remote transmitter has various functions below.

5.2.1 Display

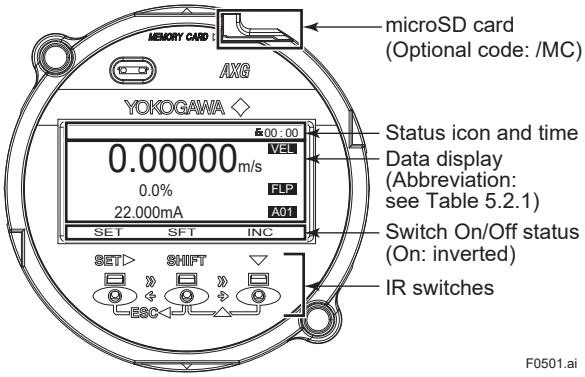

(1) Basic operation of IR switches

The operation from display panel is done by using the three IR switches; [SET], [SHIFT] and [▼]. The combination of the two switches provides a different function, and the function is indicated on the display.

IR switch (Note 1)	Indicate of switch (Note 2)	Function
[SET▶]	SET	▪ Apply parameter (Note 3) ▪ Enter data (Note 3) ▪ Move to next menu
[SHIFT]	SFT	▪ Move cursor right (Numeric type parameter)
[▼]	INC	▪ Move cursor down (Select type parameter) ▪ Increment value (Numeric type parameter) ▪ Change position of decimal point (Numeric type parameter)
[SHIFT] + [▼] (=[▲])	DEC	▪ Move cursor up (Select type parameter) ▪ Decrement value (Numeric type parameter)
SHIFT + SET▶ (=[ESC◀])	ESC	▪ Cancel ▪ Back to previous menu

Note 1: [A] + [B] (=[C]): The function is changed to switch [C] when switch [B] is pushed while pushing switch [A].
Note 2: [SET], [SFT], [INC], [DEC] and [ESC] indicate the assigned function in accordance with display mode at that time.
Note 3: "Apply" and "Enter" are executed by pushing a switch twice. If the execution does not work properly, release your finger from the display glass completely after initially pressing [SET], and then, press that key again.

(2) Status icons

Icon	Contents	Icon	Contents
	Write protect Invalid		Write protect Valid
	Device Busy		Device Fault
	Ready for microSD card		Accessing microSD card
	Disable to access microSD card		Uploading parameters
	Downloading parameters		Trend graph executing
	BRAIN communication		HART communication
	Modbus communication		FOUNDATION fieldbus communication
	PROFIBUS PA communication		System alarm occurs
	Process alarm occurs		Setting alarm occurs
	Warning occurs		Information occurs
	Display Damping Valid		Operation level: Operator
	Operation level: Maintenance		Operation level: Specialist

(3) Data indication part

The process values are available to select 8 items maximum on the display. It is possible to indicate 4 items maximum on the display at the same time, and the rest 4 items are able to show by scrolling.

Table 5.2.1 Abbreviation table of process values to be indicated on the display.

Abbreviation	Contents
FLP(*1)	Flow rate %
PRV(*1)	Process value
VEL(*1)	Flow velocity
VFL(*1)	Volumetric flow
MFL(*1)	Mass flow
FLB	Flow rate in % bar graph
CAL(*1)	Calorie
TL1(*1)	Totalization value 1
TL2(*1)	Totalization value 2
TL3(*1)	Totalization value 3
TAG	Tag No. (PD tag for FOUNDATION fieldbus type)
LTG	Long Tag (for HART communication type only)
COM	Communication protocol
ADH	Adhesion diagnostic Level (Alarm at Level 4)
AO1(*1)	Analog output value 1
AO2(*1)	Analog output value 2
FNL	Flow Noise Level (Alarm at Level 4)
TC1	Count value of totalizer 1
TC2	Count value of totalizer 2
TC3	Count value of totalizer 3
MOD	Information of Modbus communication setting Display example (*2): R/001/19200/E/1
FR	AI1 Flow rate
FRP	AI1 Flow rate(%)
FRB	AI1 Flow rate(%Bar)
AI1	AI1.OUT
AI2	AI2.OUT
AI3	AI3.OUT
AI4	AI4.OUT
IT1	IT1.OUT
IT2	IT2.OUT
AR	AR.OUT
TO1	TOT1.TOTAL
TO2	TOT2.TOTAL
TO3	TOT3.TOTAL

*1: Available to display the online trend graph.
*2: Explanation of display example

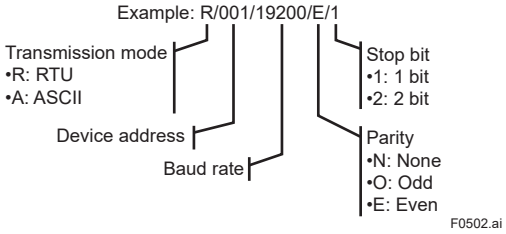

5.2.2 Basic Configuration for Display

For paramter setting from display panel, configurable parameters differ by the three operational levels specfied in Table 5.2.2, and a passcode is needed to enter into Setting mode. No passcode requires for “Operator”, and a passcode corresponding to each level requires for “Maintenance” or “Specialist”.
For parameter in details, read the user’s manual of applicable communication type as listed in Table 1.1.

Table 5.2.2 Parameter setting from display panel and operation level

Operation Level	Reading parameters	Writing parameters
Operator	All parameters	Parameters related with basic display settings including display language.
Maintenance	All parameters	Parameters allowed for Operator level. Parameters related with Zero adjustment.
Specialist	All parameters	All Parameters

The following parameters are available to “Operator” level without passcode.

(1) Display Language Setting

Display Menu Path:
Device setup ► Language

The language on the display is set to “English” as default at the factory shipment. Select the adequate language.

The selectable display language is different by the model and suffix code (display code) specified when ordering.
Position of the display code:
Integral type:
AXG□□□-□□□□□□□□□□□□□□□-□□□□■
Remote transmitter:
AXG4A-□□□□□□□□□□□■
AXG1A-G000□□□□1■

Display code	Selectable display language
1	English, French, German, Italian, Spanish, Portuguese, Japanese, or Russian
2	English or Chinese
3	English

(2) Display Contrast Setting (shading)

Display Menu Path:
Device setup►Detailed setup►Display set►Optional config►Contrast

Available to change the contrast of the display.

Setting item	Contents
-5 to +5	Set the contrast of the display (The value is small: Low, and the value is big: High)

(3) Display Line Setting

Display Menu Path:
Device setup ▶ Detailed setup ▶ Display set ▶ Optional config ▶ Line mode

Available to select the number of lines of process value to be indicated on the display.
Up to four lines can be displayed at the same time. The character size changes depending on the number of line.

Setting item	Contents
1 line(big)	Number of displayable process value : One (without unit)
1 line	Number of displayable process value : One (with unit)
2 line	Number of displayable process values : Two
3 line	Number of displayable process values : Three
4 line	Number of displayable process values : Four

Table 5.2.3 Display line setting and display example

Lines of display	Example 1	Example 2
1 line(big)	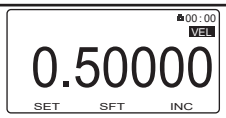 F0503.ai	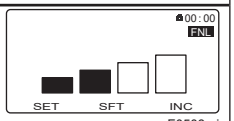 F0508.ai * Not indicate the Flow noise status. * Indicate 32 characters of the Long Tag.
1 line	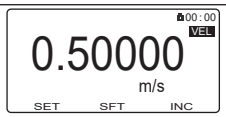 F0504.ai	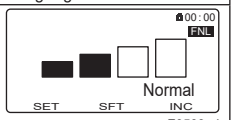 F0509.ai * Indicate 32 characters of the Long Tag.
2 line	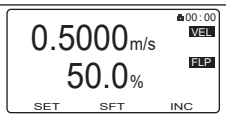 F0505.ai	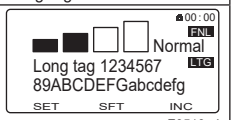 F0510.ai * Indicate 32 characters of the Long Tag.
3 line	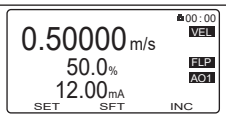 F0506.ai	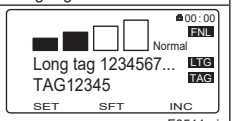 F0511.ai * Indicate 32 characters of the Long Tag in the first line. * Indicate 16 characters in the first half of 32 characters of the Long Tag in the second and third lines.
4 line	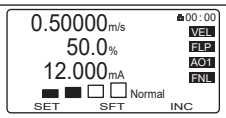 F0507.ai	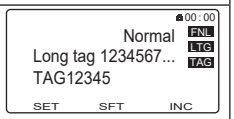 F0512.ai * Indicate 16 characters in the first half of 32 characters of the Long Tag only

(4) Date Display Formant Setting

Display Menu Path:
Device setup ▶ Detailed setup ▶ Display set ▶ Optional config ▶ Format date

The date display format can be specified below.

Setting item	Contents
MM/DD/YYYY	Displays the date in "month/day/year".
DD/MM/YYYY	Displays the date in "day/month/year".
YYYY/MM/DD	Displays the date in "year/month/day".

The date needs to be set every time when the power is turned on.
In case the date is not set:

- BRAIN communication: Date counting starts from the date stored in the memory.
- HART communication: Date counting starts from 1900/01/01 00:00:00, according to HART specification.

(5) Inverse Display Setting

Display Menu Path:
Device setup ▶ Detailed setup ▶ Display set ▶ Optional config ▶ Inversion

Available to change from normal diplay to white/black reverse display.

Setting item	Contents
Normal	Characters in the display is Black.
Inverse	Outline characters

5.3 Display Mode and Setting Mode

The device runs in the Display Mode when the power is turned on. For check or change of parameters, the Setting Mode must be activated. The following procedure explains how to change to the Setting Mode. For the function of IR switches, read Subsection 5.2.1.

[Procedure]

1) Keep touching [SET] switch for few seconds.

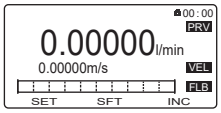

F0513.ai

2) Touch [SFT] + [INC] switches.

F0514.ai

3) "No" is selected.
Touch [INC] switch and select "Yes".

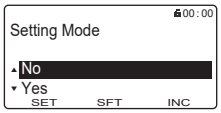

F0515.ai

4) Touch [SET] switch.

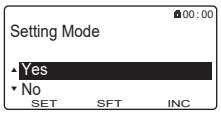

F0516.ai

5) "Yes" is blinking.
Touch [SET] switch again.

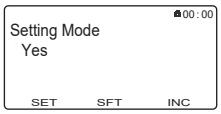

F0517.ai

6) The screen moves to the menu of Operation Level.

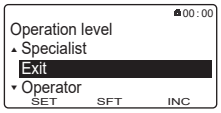

F0518.ai

7) Select an appropreate operation level by moving the cursor with [INC] or [DEC] switch.
Passcode is not necessary for "Operator". For "Maintenance" and "Specialist", passcode is necessary for each. For passcode setting, [SFT] is for position change, and [INC] is for number, then twice [SET] is for entry completion.
The default passcode at the factory shipment is set to "0000".

F0519.ai

8) When the Operation Level is determined, the screen moves to "Device setup" as the Setting Mode where parameters can be configured.
9) After completing parameter setting, push [ESC] switch. The screen returns to the Display Mode.

NOTE

In the case of Ind soft rev, follow the procedure bellow.

Communication	Ind soft rev
HART, BRAIN, Modbus	R2.01.02 or before
FOUNDATION Fieldbus	R1.01.01 or before

1) Turn on the power and wait for several seconds to move to display mode.

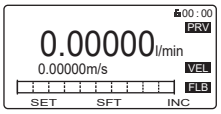

F0520.ai

2) Keep touching [SET] switch for two seconds. The screen moves to the menu of Operation Level.

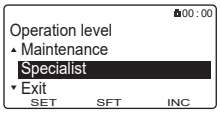

F0521.ai

3) Select an appropreate operation level by moving the cursor with [INC] or [DEC] switch.
Passcode is not necessary for "Operator". For "Maintenance" and "Specialist", passcode is necessary for each.
For passcode setting, [SFT] is for position change, and [INC] is for number, then twice [SET] is for entry completion.
The default passcode at the factory shipment is set to "0000".

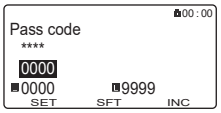

F0522.ai

4) When the Operation Level is determined, the screen moves to "Device setup" as the Setting Mode where parameters can be configured.
5) After completing parameter setting, push [ESC] switch. The screen returns to the Display Mode.

[Passcode Confirmation and Change]

The confirmation and change of the passcode are allowed only by parameter setting from the display unit.

Display Menu Path:
Device setup ▶ Detailed setup ▶ Access cfg ▶ Chg mainte
Device setup ▶ Detailed setup ▶ Access cfg ▶ Chg special

(1) Passcode for “Maintenance” operation level
To change the passcode (Maintenance code), “Maintenance” or “Specialist” as the operational level is required.

(2) Passcode for “Specialist” operation level
To change the passcode (Specialist code), “Maintenance” or “Specialist” as the operational level is required.

IMPORTANT

Display Menu Path:
Device setup ▶ Wizard

When parameters are changed in the Wizard of Easy setup, “Setting download” in the menu of each parameter must be executed after parameter is changed. Without the execution, any parameter changed is not stored into the device.

NOTE

If 10 minutes past without operation in the Setting Mode, the screen goes back to the Display Mode.

Parameter form

There are three types of parameter form below.

Type	Example of display	Contents
Select type	F0523.ai	Select the adequate data from among alternatives which are detemined in advance.
Numeric type	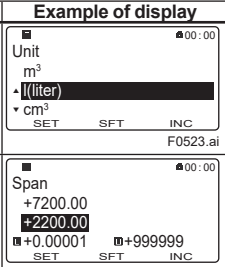 F0524.ai	Specify the data with a combination of number and a decimal point into each digit.
Alphanumeric type	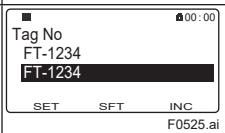 F0525.ai	Configure the data with a combination of alphanumeric characters. (Tag No., Special unit, etc…)

The alphanumeric type indicates alphanumeric characters in the following order.

0123456789ABCDEFGHIJKLMNOPQRSTUVWXYZabcdefghijklmnopqrstuvwxyz!"#$%&'()*+,-./:;<=>?@[\]^_`{|}~"space"

5.4 Parameter Setting from Display Panel

This section explains how to specify the parameters from display panel. Select “Specialist” at the Operation Level referring to Section 5.3. And select the parameters to be specified in the Setting Mode.
When setting parameters on FOUNDATION fieldbus type, set appropriate MODE_BLK.Target on resource block, transducer block or function block to “O/S”.
When setting parameters on PROFIBUS PA type, set appropriate MODE_BLK.Target on transducer block or function block to “O/S”.
Parameter “All block target mode” can simplify the operation on the display. By setting this parameter, resource block, transducer block or function block can be set to O/S or reset to the former setting at a time. The procedure to use the parameter is as follows.

1. Set “O/S” on parameter “All block target mode”.
2. Set the target parameter on display.
3. Set “Restore” on parameter “All block target mode”.

Menu paths on display (there are 5 paths to reach):
Device setup ▶ Block mode ▶ All block target mode
Device setup ▶ Diag/service ▶ All block target mode
Device setup ▶ Wizard ▶ All block target mode
Device setup ▶ Detailed setup ▶ All block target mode
For FOUNDATION fieldbus;
Device setup ▶ Detailed setup ▶ Fieldbus info ▶ All block target mode
For PROFIBUS PA;
Device setup ▶ Detailed setup ▶ PROFIBUS info ▶ All block target mode

NOTE

For the device with the ordering information specified at ordering, the specified parameters (flow span and unit, tag number, etc.) are stored in the device at the factory shipment. Without the ordering information specified, parameter setting needs to be done by user.

5.4.1 Setting example of Select type Data: Flow rate unit

The following is the procedure of changing the flow rate unit as Select type parameter according to the specification of HART protocol.
The flow rate unit needs to be specified with “Physical unit” and “Time unit” individually. When the flow rate unit needs to be set “l/min”, select “l (litter)” at the Physical unit and “/min” at the Time unit.

Display Menu Path:
Device setup ▶ Detailed setup ▶ Pro var ▶ Volume ▶ Unit
Device setup ▶ Detailed setup ▶ Pro var ▶ Volume ▶ Time Unit

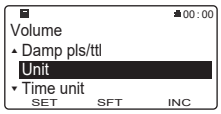

F0526.ai

Specify the Physical unit for volumetric flow. Move cursor with [INC] and [DEC] according to the menu path above, and select the “unit” then push [SET].

F0527.ai

Move cursor with [INC] and [DEC], and select the “l(liter)” then push [SET]. As the selected unit is blinking, push [SET] to determin. The screen returns to the setting page.

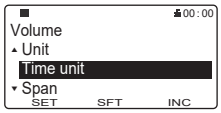

F0528.ai

Specify the Time unit for volumetric flow. Move cursor with [INC] and [DEC] according to the menu path above, and select the “Time unit” then push [SET].

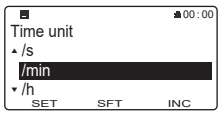

F0529.ai

Move cursor with [INC] and [DEC], and select the “/min” then push [SET]. As the selected unit is blinking, push [SET] to determin. The screen returns to the setting page after the setting.

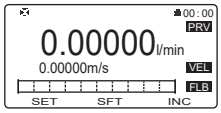

F0530.ai

After completing the parameter setting, push [ESC] then the screen returns to the Display Mode.

NOTE

Be sure to set the Flow rate unit in the beginning when the Flow rate unit and Flow span value are changed at the same time.
When the unit is changed, the value of flow rate span is converted to related values automatically according to the unit change.

5.4.2 Setting example of Numeric type Data: Flow rate span

The following is the procedure of changing the Flow rate span as Numeric type parameter.

Display Menu Path:
Device setup ▶ Detailed setup ▶ Pro var ▶ Volume ▶ Span

NOTE

Be sure to set the Flow rate unit in the beginning when the Flow rate unit and Flow span value are changed at the same time.
When the unit is changed, the value of flow rate span is converted to related values automatically according to the unit change.

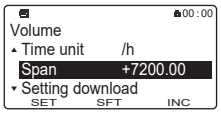

F0531.ai

Specify the Flow rate span unit.
Move cursor with [INC] and [DEC] according to the menu path above, and select the “Span” then push [SET].

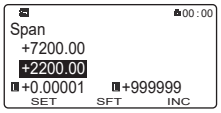

F0532.ai

The switch's functionality of setting the Flow rate span is as below:
Plus/minus and mumeric change: [INC]
Movement on digits: [SFT]
Determination of parameter: [SET]
L : Minimum value
U : Maximum value
Push [SET] to decide while the value of Flow rate span is blinking. The screen returns to the setting page after the setting.

5.4.3 Setting Example of Alphanumeric type Data: Tag No.

The following is the procedure of changing the Tag No. as Alphanumeric type parameter according to the specification of HART protocol.

Display Menu Path:
Device setup ▶ Detailed setup ▶ Device info ▶ Order info ▶ Tag No.

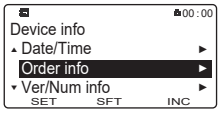

F0533.ai

Specify the Tag No..
Move cursor with [INC] and [DEC] according to the menu path above, and select the “Order info” then push [SET].

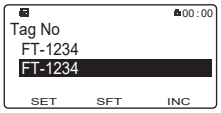

F0534.ai

For Tag No., up to 8 characters can be entered from display panel.
The switch's functionality of setting the Flow rate span is as below:
Plus/minus and mumeric change: [INC]
Movement on digits: [SFT]
Determination of parameter: [SET]
Available characters: ASCII characters
Push [SET] to decide while the value of Tag No. is blinking. The screen returns to the setting page after the setting.

5.5 microSD Card Setting

For the device with optional code MC, by setting the dedicated microSD card into the slot on the display unit, the parameter setting can be stored into it. The stored data can be restored to the device. For the detailed function, read the user's manual of applicable communication type as listed in Table 1.1.

WARNING

Use only micro SD cards sold by YOKOGAWA. Operation cannot be guaranteed when other cards are used.

(1) Installing microSD Card

Carefully insert the dedicated microSD card into the slot on the display unit until the slot holds the card. (see Figure 5.5).

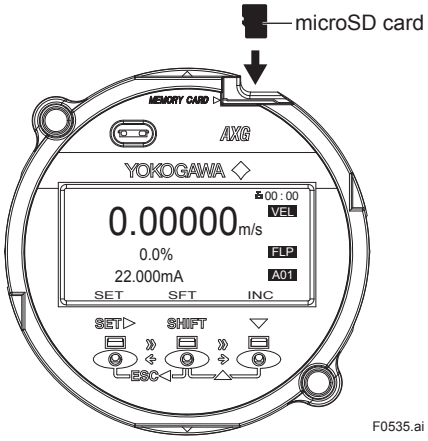

Figure 5.5 microSD setting

(2) Removing microSD Card

The microSD is released from the slot by pushing it. To prevent from losing the microSD card, be careful to handle the card.

IMPORTANT

If the microSD card is removed without execution of "Unmount" on parameter setting, it may result in the corruption of stored data and the abnormal operation of device.

Display Menu Path:
Device setup▶microSD▶Unmount

5.6 BRAIN Configuration Tool

The connection of the BRAIN configuration tool (BRAIN TERMINAL (BT200) or FieldMate (Versatile Device Management Wizard)) is shown as below. Read the user's manual of BT200 (IM 01C00A11-01E) for the operation, and the user's manual of BRAIN communication type as listed in Table 1.1 for the detailed parameter setting via BRAIN communication

The communication signal is superimposed onto the 4 to 20 mA DC analog signal to be transmitted. The BRAIN configuration tool can interface with this device from the control room, this device site, or any other wiring termination point in the loop, provided there is a minimum load resistance of 250 Ω between the connection and the receiving product.
To communicate, it must be connected in parallel with this device, and the connections must be non-polarized. See Figure 5.6.

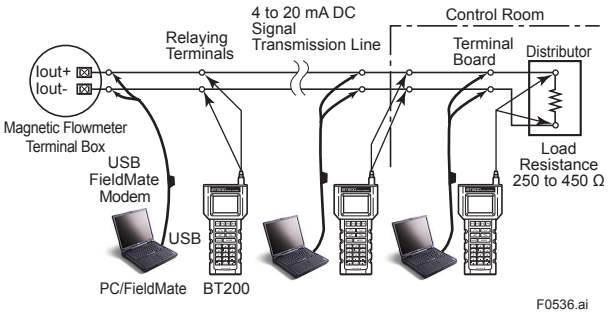

Figure 5.6 Connecting the BRAIN Configuration tool

IMPORTANT

Communication signal is superimposed on analog output signal. It is recommended to set a low-pass filter (approximately 0.1s) to the receiver in order to reduce the output effect from communication signal. Before online-communication, confirm that communication signal does not give effect on the upper system.

IMPORTANT

Restrictions exist with regard to the distance over which communication is possible. Read the general specifications as listed in Table 1.1.

For explosion protection type, the configuration tool should be connected at the safe site of "no explosive atmosphere".

5.7 HART Configuration Tool

The connection of the HART configuration tool (FieldMate (Versatile Device Management Wizard)) is shown as below. Read the user's manual of HART communication type as listed in Table 1.1 for the detailed parameter setting via HART communication.

NOTE

- For more details regarding the operations of the HART configuration tool, read the manual of HART configuration tool.
- When using FieldMate, be sure that the revision is R3.02.00 or later.

NOTE

Perameters on HART configuration tool are displayed in English only. Even if any language other than English is selected as "display language" from display panel, parameters are displayed in English on HART configuration tool.

5.7.1 Connections with HART Configuration Tool

The HART configuration tool can interface with this device from the control room, this device site, or any other wiring termination point in the loop, provided there is a minimum load resistance of 230 Ω between the connection and the receiving product. To communicate, it must be connected in parallel with this device, and the connections must be non-polarized.
Read Figure 5.7.

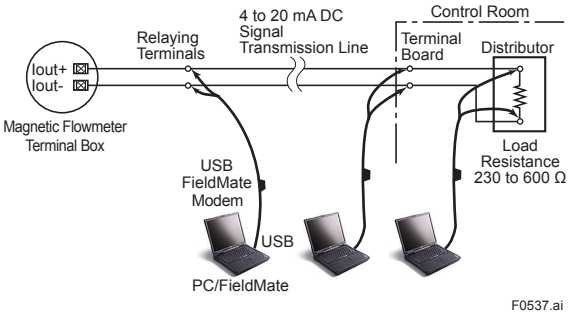

Figure 5.7 Connecting the HART Configuration Tool

IMPORTANT

Communication signal is superimposed on analog output signal. It is recommended to set a low-pass filter (approximately 0.1s) to the receiver in order to reduce the output effect from communication signal. Before online-communication, confirm that communication signal does not give effect on the upper system.

For explosion protection type, the configuration tool should be connected at the safe site of "no explosive atmosphere".

5.7.2 HART Configuration Tool and Device Revision

IMPORTANT

Protocol revision supported by HART configuration tool must be the same protocol revision or later than that of the device. If it is not, communication error occurs.

(1) Device Description (DD) and Device Revision

Before using the HART configuration tool, confirm that the DD (Device Description) of this device is installed in the configuration tool.
If correct DD is not installed to the configuration tool, install a correct DD from the HART official site, otherwise, contact the respective vendors of the configuration tool for its upgrade information.
The device revision is as follows.

DD Revision	AXG4A: 1 or later AXG1A: 1 or later
Device Type (Transmitter)	AXG4A (0x371A) AXG1A (0x371C)
Device Revision (Transmitter)	AXG4A: 1, 3 AXG1A: 2, 3

- **Confirmation of DD revision**
  (a) Turn on the power of the configuration tool under the standalone condition.
  (b) Confirm the device revision from the installed DD file name according to the procedure provided for the configuration tool.
  DD file name is four digits, upper two digits are device revision and lower two digits are DD revision.

NOTE

Device revision of DD file is given in hexadecimal.

- **Confirmation of Device revision**
  Connect the configurator to this device and confirm the revision by the following parameter.

HART Communication Menu Path: Device root menu ▶ Detailed setup ▶ Device information ▶ HART setup ▶ Fld dev rev

5 Basic Operating Procedures

(2) Device Type Manager (DTM) and Device Revision

When configuring the parameters by FieldMate, use the DTM (Device Type Manager) of the following table.

DTM Name	AXG4A FDT2.0 HART7 DTM AXG1A FDT2.0 HART7 DTM
DTM Revision	AXG4A: 5.9.2.0 or later AXG1A: 5.9.2.0 or later
Device Type (Transmitter)	AXG4A (0x371A) AXG1A (0x371C)
Device Revision (Transmitter)	AXG4A: 1, 3 AXG1A: 2, 3

* : The DTM is included in Yokogawa DTM Library HART 8.2 or later.

NOTE

The DTM revision can be confirmed by “DTM setup”.
Device Files is a Media included in FieldMate. The user registration site provides Device Files with the latest update programs.
(URL: https://partner.yokogawa.com/global/fieldmate/)
When updating the DTM, following operation by “DTM setup” is required.

- Update DTM catalog
- Assign corresponding DTM to the device.

For details, read the user’s manual of FieldMate.

5.8 Modbus Configuration Tool

The connection of the Modbus configuration tool is shown as below.
Read the user’s manual of Modbus communication type as listed in Table 1.1 for the detailed parameter setting via Modbus communication.

5.8.1 Connections with Modbus Configuration Tool

The Modbus configuration tool is connected to the transmitter instead of Modbus host.
RS-485 USB Adaptor is required to connect transmitter to PC.
See Figure 5.8.

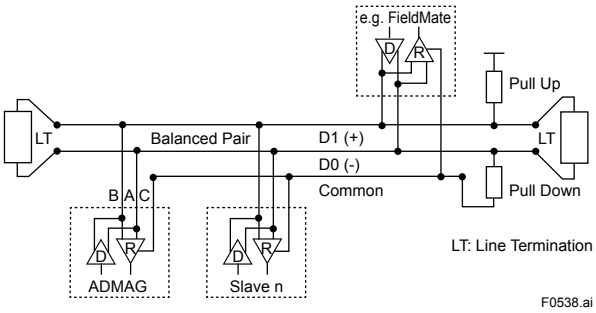

Figure 5.8 Connecting the Modbus Configuration tool

5.8.2 Modbus Configuration Tool and Device Revision

When configuring the parameters by FieldMate, use the DTM (Device Type Manager) of the following table.

DTM name	AXG4A Modbus DTM
DTM Revision	1.1.4.0 or later
Device type	AXG4A
Device Revision	1, 3

NOTE

The DTM revision can be confirmed by “DTM setup”.
Device Files is a Media included in FieldMate. The user registration site provides Device Files with the latest update programs.
(URL: https://partner.yokogawa.com/global/fieldmate/)
When updating the DTM, following operation by “DTM setup” is required.

- Update DTM catalog
- Assign corresponding DTM to the device.

For details, read the user’s manual of FieldMate.

5.9 FOUNDATION fieldbus Configuration Tool

The connection of the FOUNDATION fieldbus configuration tool is shown as below.
Read the user's manual of FOUNDATION fieldbus communication type as listed in Table 1.1 for the detailed parameter setting via FOUNDATION fieldbus communication.

5.9.1 Connection with FOUNDATION fieldbus Configuration Tool

Connect the devices as shown in Figure blow. Connect the terminators at both ends of the trunk, with a minimum length of the spur laid for connection.
The polarity of signal and power must be maintained.

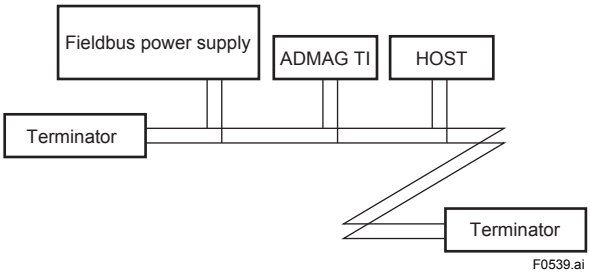

5.9.2 FOUNDATION fieldbus Configuration Tool and Device Revision

(1) Device Description (DD) and Device Revision

Before using the FOUNDATION fieldbus configuration tool, confirm that the DD (Device Description) of this device is installed in the configuration tool.
If correct DD is not installed to the configuration tool, install a correct DD from the FieldComm Group official site, otherwise, contact the respective vendors of the configuration tool for its upgrade information.

The device revision is as follows.

DD Revision	1 or later
Device Type	AXG4A (0x0016)
Device Revision	1

Read 5.7.2 HART Configuration Tool and Device Revision. for the confirmation of DD revision.

(2) Device Type Manager (DTM) and Device Revision

When configuring the parameters by FieldMate, use the DTM (Device Type Manager) of the following table.

DTM Name	AXG4A FF DTM
DTM Revision	3.9.2.1 or later
Device Type	AXG4A(0x0016)
Device Revision	1

* : The DTM is included in Yokogawa DTM Library 7.8 or later.

NOTE

The DTM revision can be confirmed by "DTM setup".
Device Files is a Media included in FieldMate. The user registration site provides Device Files with the latest update programs.
(URL: https://partner.yokogawa.com/global/fieldmate/)
When updating the DTM, following operation by "DTM setup" is required.

- Update DTM catalog
- Assign corresponding DTM to the device.

For details, read the user's manual of FieldMate.

5.10 PROFIBUS PA Configuration Tool

The connection of the PROFIBUS PA configuration tool is shown as below.
Read the user's manual of PROFIBUS PA communication type as listed in Table 1.1 for the detailed parameter setting via PROFIBUS PA communication.

5.10.1 Connection with PROFIBUS PA Configuration Tool

Connect the devices as shown in Figure blow.
Connect the terminators at both ends of the trunk, with a minimum length of the spurlaid for connection.
The polarity of signal and power must be maintained.

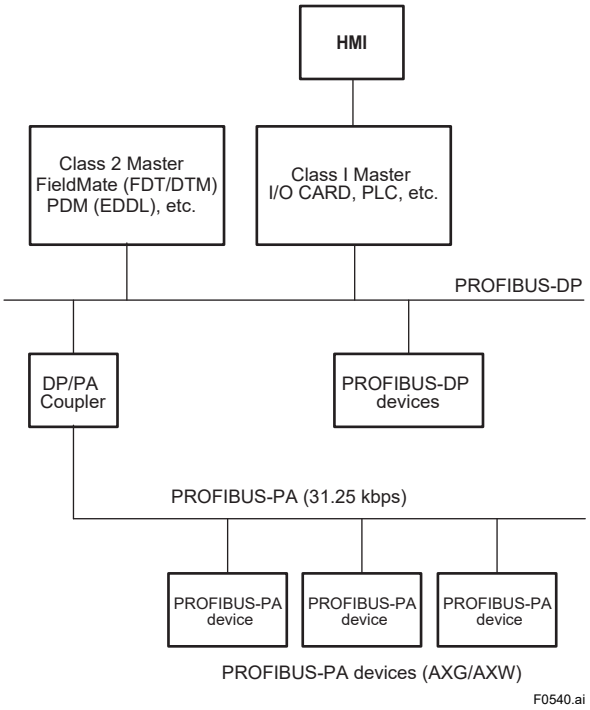

5.10.2 PROFIBUS PA Configuration Tool and Device Revision

(1) Device Type Manager (DTM) and Device Revision

When configuring the parameters by FieldMate, use the DTM (Device Type Manager) of the following table.

DTM Name	ADMAG TI AXG4A PA
DTM Revision	1.0.0 or later
Device Type	AXG (0x4591)
Device Revision	1

(2) SIMATIC PDM for EDDL

Electronic Device Description Language (EDDL) defines field device information, and can be used independently of vendors.
EDDL files can be read by engineering tools, and the software is used to conduct adjustment, configuration, calibration and tests of devices.
For information on AXG/AXW configuration using SIMATIC PDM, refer to the SIMATIC PDM user's manual.

NOTE

The DTM revision can be confirmed by "DTM setup".
Device Files is a Media included in FieldMate. The user registration site provides Device Files with the latest update programs.
(URL: https://partner.yokogawa.com/global/fieldmate/)
When updating the DTM, following operation by "DTM setup" is required.

- Update DTM catalog
- Assign corresponding DTM to the device.

For details, read the user's manual of FieldMate.

5.11 EtherNet/IP Configuration Tool

The Ethernet configuration can connect with this product from any connection point of RJ-45.
Port 1 and/or Port 2 can be used for plant operation and maintenance of Ethernet communication.

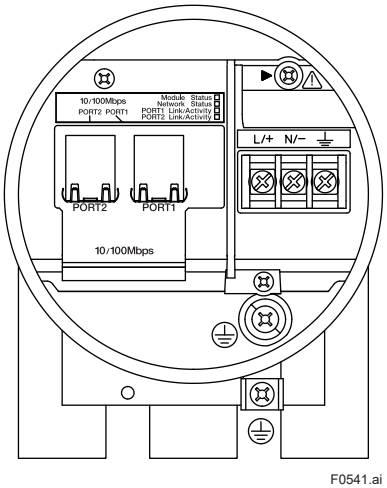

Terminal Configuration

NOTE

For maintenance (temporary connection) purpose, connect RJ-45 Ethernet cable without passing though the cable hole of device.

Web page can be used for configuration of EtherNet/IP device. See IM 01E21A02-06EN for details.

Supported software

Operation systems	Microsoft Windows 7 or higher
Web browser	Internet explorer 8 or higher Google chrome Microsoft Edge

Product code/name and EDS file for EtherNet/IP

EDS file is required to connect host application tool for EtherNet/IP (e.g. PLC). If EDS is not installed in the host tool, download the correct EDS file from ODVA official web site and install it, or contact respective vendor of the host tool.
EDS file is separated by the Product code/name. Confirm the following table to install the correct EDS file.

AXG4A

Vendor ID	250
Vendor Name	Yokogawa Electric Corporation
Product Code	201
Product Name	AXG4A Magnetic Flowmeter

6. Operation

After the installation of sensor into process piping, the wiring of input/output terminals, the configuration of required parameters, and the zero adjustment prior to peration, the flowmeter outputs a flow signal from its terminals as soon as the fluid is sent in the pipe.

CAUTION

If any damages, such as cracks, breakage or destruction on the glass of the display occurs, stop using it and replace the cover. If it is used with damaged glass, it may cause injury, electric shock, malfunction, and specified protection performance of the housing is not provided.

6.1 Pre-operation Zero Adjustment

Zero adjustment is carried out to ensure that the output for zero flow is 0% (i.e., 4 mA). Although adjustment to zero is performed at the manufacturing plant prior to shipment, this procedure must be carried out once again following the installation of piping in order to match the magnetic flowmeter to its operating conditions.
This section describes the zero adjustment procedure using the display unit. For AXFA11, read the applicable user's manual as listed in Table 1.1.

IMPORTANT

- Zero adjustment should be carried out before actual operation. Note that parameter setting or change cannot be carried out during execution of zero adjustment (i.e., for approximately 30 seconds).
- Zero adjustment should only be carried out when the sensor has been filled with measurement fluid and the fluid velocity is completely zero by closing the valve.
- Each time that the fluid being measured is changed, be sure to carry out zero adjustment with the new fluid.

6.2 Zero Adjustment from Display Unit

A procedure of executing zero adjustment is as follows;

Display Menu Path:
Device setup ► Diag/Service ► Autozero ► Execute
Device setup ► Diag/Service ► Autozero ► Result ► Zero value

Enter the Setting Mode. (Read Section 5.3)
For FOUNDATION fieldbus or PROFIBUS PA type, set mode of all transducer blocks to "O/S" (Out of Service) before the adjustment. After the adjustment, set mode of all transducer blocks to "Auto".

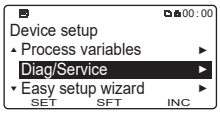

F0601.ai

Select "Diag/Service" accoriding to the menu path above.

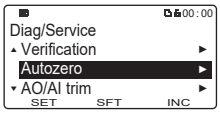

F0602.ai

Select "Autozero".

*: Fieldbus communication type does not have AO/AI trim.

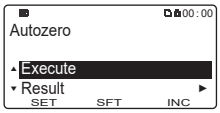

F0603.ai

Select "Execute".

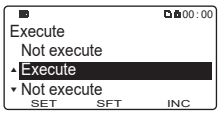

F0604.ai

Select "Execute".

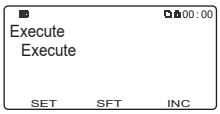

F0605.ai

When "Execute" blinks, touch [SET] to execute.

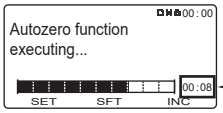

F0606.ai

Autozero starts, and the progress is desplayed with a remaining time and a bar graph. Wait for the completion.

The time remaining until the end.

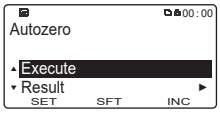

F0607.ai

After Autozero finished, the display returns to "Autozero" menu.

• Confirmation of zero adjustment result

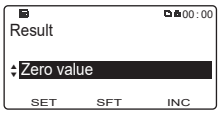

F0608.ai

For the result of Autozero, select "Result" and then "Zero value".

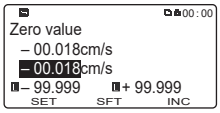

F0609.ai

Result of Autozero is indicated as on the left.

NOTE

When the zero adjustment result exceeds defined value, the warning [092: AZ wam] is indicated.

Zero adjustment can be executed with the following parameter.

BRAIN Communication:
B50:AUTOZERO EXE
HART Communication Menu Path:
Device root menu ▶ Basic setup ▶ Autozero ▶ Autozero Exe
Modbus Communication:
Register Address: 40361
FOUNDATION fieldbus Communication:
Device Configuration ▶ STB ▶ Device Configuration ▶ Maintenance ▶ Autozero ▶ Autozero Execute
PROFIBUS PA Communication:
Device ▶ Calibration ▶ Autozero Exe

6.3 Hardware Switch Setting

NOTE

The integral type is explained as an example. Pay same attention to the AXG4A remote transmitter.

6.3.1 Integral Type and AXG4A Remote Transmitter

IMPORTANT

- Removing and installing the cover are necessary for hardware switches. Perform removing and installing the cover as described in Section 3.6. When opening the cover, wait for more than 20 minutes after turning off the power. This work must be carried out by the trained personnel having knowledge of safety standard.
- To preserve the safety, do not touch the electrical circuit and the cables except the setting switches.
- When installing the cover, in order to contact the housing and the cover, be sure to screw it firmly into the housing without any space between them.

(1) Remove the cover.
(2) While holding the display by hand, loosen the two mounting screws.
(3) While holding the display by hand (careful for connecting cable), set the switches. Never remove connector in this case.

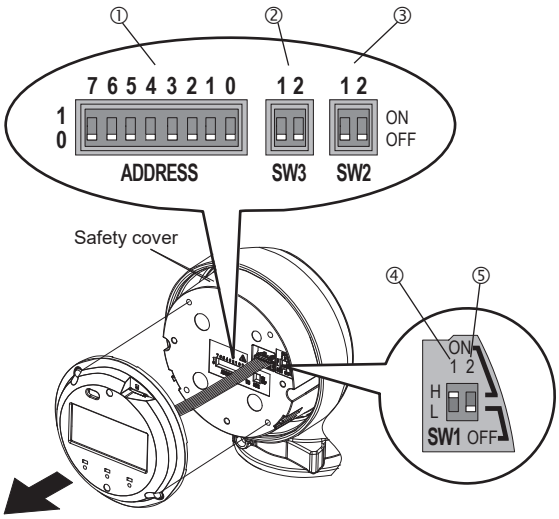

① Address switch (ADDRESS)
② Pull up and Pull down switch (SW3)
*For EtherNet/IP communication: Enable hardware address switch (SW3-1)
*For EtherNet/IP communication: DHCP switch (SW3-2)
③ Line termination switch (SW2)
④ Burnout switch (SW1-1)
*For fieldbus communication: Simulation switch
⑤ Write protect switch (SW1-2)
*For fieldbus communication: Write lock switch

F0610.ai

Figure 6.3.1 Hardware switches

(4) Taking care not to entangle the cables, tighten the two screws on the display.
(5) Install the cover.

WARNING

To prevent electric shock and maintain performance, do not remove the safety cover.

NOTE

The hardware switches are adjacent. Special care should be taken when making switch settings.

- **Setting of Burnout Switch (Except FOUNDATION fieldbus, PROFIBUS PA, EtherNet/IP)**

The burnout function sets the direction of current output in situations where the CPU has become damaged.
Upon shipment from the manufacturing plant, the burnout direction is set to High (i.e., > 21.6 mA); however, in cases where the optional codes C1 or C2 have been specified, the output direction will be set to Low (i.e., < 2.4 mA).
Modification of the burnout direction must be carried out using the burnout switch (SW1-1) (See Figure 6.3.1).

Table 6.3.1 Burnout switch (SW1-1)

Position of Switch	Burnout Direction	Burnout Output	Description
	High	> 21.6 mA	When optional code C1 or C2 is not specified, the setting is “High”.
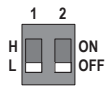	Low	< 2.4 mA	When optional code C1 or C2 is specified, the setting is “Low”.

- **Setting of Write Protect Switch (Except FOUNDATION fieldbus, PROFIBUS PA)**

The write protect function is to prevent the overwriting of parameters.
Write protection can be carried out using either the write protection switch (SW1-2) (See Figure 6.3.1) or software function with parameter setting. If either of these items is activated, the overwriting of parameters will be prohibited.

Table 6.3.2 Write protect switch (SW1-2)

Position of Switch	Write Protect Function
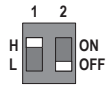	OFF (Factory setting) Parameter can be overwritten.
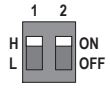	ON Parameter can not be overwritten.

- **Setting of Simulation Switch (Only for FOUNDATION fieldbus, PROFIBUS PA)**

The simulation function simulates the input of a function block and lets it operate as if the data was received from the transducer block. It is possible to conduct testing for the downstream function blocks or alarm processes.
A SIMULATE_ENABLE switch is mounted in the transmitter amplifier. This is to prevent the accidental operation of this function. When this is switched on, simulation is enabled. (See table below)
For FOUNDATION fieldbus type, if REMOTE LOOP TEST SWITCH is written to the SIM_ENABLE_MSG parameter (index 2922) of the maintenance transducer block, it activates the same operation as when the above switch is turned ON. Note that this parameter value is lost when the power is turned OFF.
In simulation enabled status, an alarm is generated from the resource block, and other device alarms will be masked. The simulation must be disabled immediately after using this function.

Table 6.3.3 Simulation Switch (SW1-1)

Position of Switch	Simulation Function
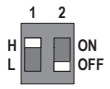	ON: Simulation function enabled.
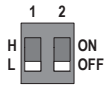	OFF: Simulation function disabled.

- **Setting of Write Lock Function Switch (Only for FOUNDATION fieldbus, PROFIBUS PA)**

The transmitter is provided with a write lock function to restrict write operations to blocks and prevent inadvertent writing of parameter data.
For FOUNDATION fieldbus:
To enable this function, use the write lock switch (Hard W Lock) or the WRITE_LOCK (index 1034) (Soft W Lock). To enable write lock function, set parameter in Feature Selection of Resource Block. For parameter in details, read section 5.12 of the user’s manual for FOUNDATION Fieldbus communication type as listed in Table 1.1.
For PROFIBUS PA:
To enable this function, use the write lock switch (Hard W Lock) or the WRITE_LOCKING (Physical Block Relative index 18). For parameter in details, read section 5.12 of the user’s manual for PROFIBUS PA communication type as listed in Table 1.1.

Table 6.3.4 Write Lock Switch (SW1-2)

Position of Switch	Write Lock Function
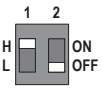	OFF: Write Lock function disabled. (It depends on the setting in Feature Selection.)
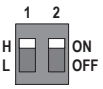	ON: Write Lock function enabled. (It depends on the setting in Feature Selection.)

NOTE

- If the hardware switch is set to “ON”, the condition of preventing parameter overwriting kept until the switch is set to “OFF”.
- For the software write protect, read the user’s manual of applicable communication type as listed in Table 1.1.

● Setting of Address Switch (ADDRESS)

This switch is only available for the product with Modbus, PROFIBUS PA or EtherNet/IP communication.
For the product with Modbus or PROFIBUS PA communication, it is necessary to set the device address. The device address can be set using either the address switch (ADDRESS) (See Figure 6.3.1) or software function with parameter setting.

- Address Switch (Position 7)
  By using the address switch (Position 7), select the device address to be used from the device address specified by either the hardware switch or the parameter setting.

Table 6.3.5 Address switch (Position 7)

Position of Switch	Description
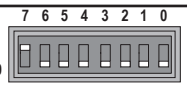	The device address set by Address Switch (Position 0 to 6) is used.
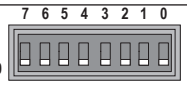	The device address set by parameter setting is used. Factory setting.

- Address Switch (Position 0 to 6)
  By using the address switch (Position 0 to 6), the device address is set.
  For Modbus;
  Setting range: 1 to 127
  If the address switch is set to 0, the device address is automatically converted to 1.
  For PROFIBUS PA;
  Setting range: 0 to 126
  Setting example:
  If only the address switch “position 6” is set to 1, the resulting the device address is 64.
  $(1 * 2^6 + 0 * 2^5 + 0 * 2^4 + 0 * 2^3 + 0 * 2^2 + 0 * 2^1 + 0 * 2^0)$

For the product with EtherNet/IP communication, the device IP address can be set using either the address switch (ADDRESS) (See Figure 6.3.1) or software parameters.
The Address Switch (ADDRESS) is used to set the 4th octet (8 bits) of the IP address. The 1st, 2nd and 3rd octets of the IP address are set by software parameters. The 4th octet of the address which is set by this switch (ADDRESS) is enabled when the Enable hardware switch (SW3-1) is set to ON. When the Enable hardware switch (SW3-1) is set to OFF, the 4th octet of the IP address set by this switch (ADDRESS) is disabled, and the 4th octet of the address set by software parameter is enabled.

Table 6.3.6 Address switch

Position of Switch	Description
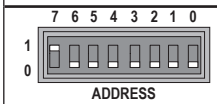	Setting range: 1 to 244 If all switches are set to “OFF“ or “ON“, the device IP address (4th octet) is automatically converted to 210.

Setting example:
If only the address switch “position 7” is set to 1, the device IP address (4th octet) is 128.
$(1 * 2^7 + 0 * 2^6 + 0 * 2^5 + 0 * 2^4 + 0 * 2^3 + 0 * 2^2 + 0 * 2^1 + 0 * 2^0)$

● Setting of Line Termination Switch (SW2)

This switch is only available for the product with Modbus communication.
Line terminations of two ends on the bus are required to communicate Modbus.
One termination mode can be set using the line termination switch (SW2) (See Figure 6.3.1).

Table 6.3.7 Line termination switch (SW2)

Position of Switch	Termination mode	Description
	Bus end	Available when both SW2-1 and SW2-2 are“ON”. (Resistance is 150 Ω)
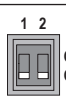	Not bus end	Available when both SW2-1 and SW2-2 are“OFF”. Factory setting.

Both SW2-1 and SW2-2 must be set at the same position.

● Setting of Pull up and Pull down Switch (SW3)

This switch is only available for the product with Modbus communication.
When the bus is in an idling state, it becomes unstable potentially without setting D1 for “pull up” and D0 for “pull down”.
Pull up and pull down mode can be set using the pull up and pull down switch (SW3) (See Figure 6.3.1).

Table 6.3.8 Pull up and pull down switch (SW3)

Position of Switch	Pull up and Pull down mode	Description
1 2 ON OFF	Used	Available when both SW3-1 and SW3-2 are“ON”. (Resistance : 600 Ω, Pull-up voltage: +5 V)
1 2 ON OFF	Not used	Available when both SW3-1 and SW3-2 are“OFF”. Factory setting.

Both SW3-1 and SW3-2 must be set at the same position.

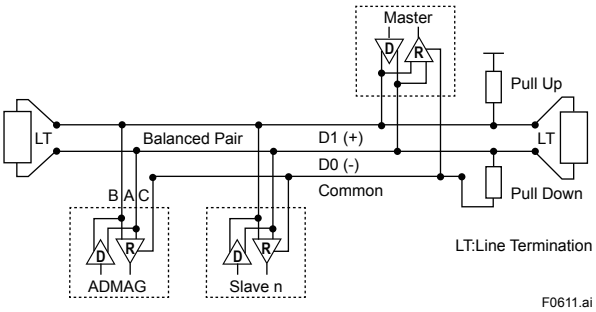

Figure 6.3.2 Modbus connection

● Setting Enable Hardware Address Switch (SW3-1) (Only for EtherNet/IP communication)

This switch is used to enable or disable the Address Switch (ADDRESS) and DHCP Switch (SW3-2).

Table 6.3.9 Enable hardware address switch (SW3-1)

Position of Switch	Description
1 2 ON OFF SW3	Hardware address switch: ON Device IP address is set by Address switch.
1 2 ON OFF SW3	Hardware address switch: OFF Device IP address is set by software parameters.

● Setting DHCP Switch (SW3-2) (Only for EtherNet/IP communication)

The DHCP switch (See Figure 6.3.1) is used to enable or disable DHCP function. The DHCP function is enabled or disabled by this switch when Enable hardware switch (SW3-1) is set to ON. When the Enable hardware switch (SW3-1) is set to OFF, the setting by this switch is disabled and DHCP function is enabled or disabled by software parameter.

Table 6.3.10 DHCP switch (SW3-2)

Position of Switch	Description
1 2 ON OFF SW3	DHCP function is disabled. The fixed IP address set by the address switch or software parameter is used as the device address.
1 2 ON OFF SW3	DHCP function is enabled. The device IP address is set by DHCP.

6.3.2 AXG1A Remote Transmitter

IMPORTANT

- Removing and installing the cover are necessary for hardware the switches. Perform removing and installing the cover as described in Subsection 4.4.5. When opening the cover, wait for more than 20 minutes after turning off the power. This work must be carried out by the trained personnel having knowledge of safety standard.
- To preserve the safety, do not touch the electrical circuit and the cables except the setting switches.

(1) Remove the cover (See Figure 6.3.3).

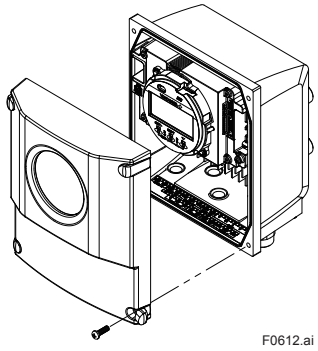

Figure 6.3.3 Removing the cover

(2) Set the switches.

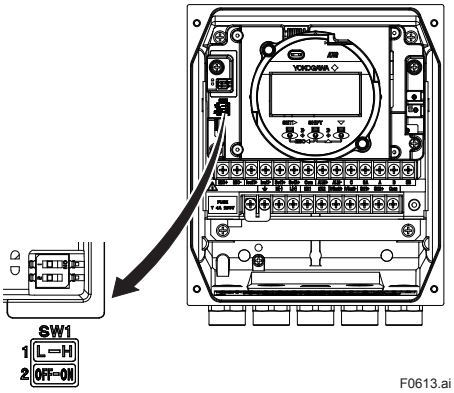

Figure 6.3.4 Hardware switches

(3) Install the cover.

NOTE

On the front of the amplifier's, the burnout switch (i.e., Switch 1-1) and the write protect switch (i.e., Switch 1-2) are located adjacent to each other. Accordingly, special care should be taken when making switch settings.

(1) Setting of Burnout Switch

The burnout function sets the direction of current output in situations where the CPU has become damaged. Upon shipment from the manufacturing plant, the burnout direction is set to High (i.e., >21.6 mA); however, in cases where the optional codes C1 or C2 have been specified, the output direction will be set to Low (i.e., <2.4 mA). Modification of the burnout direction must be carried out using the burnout switch (i.e., Switch 1-1) (See Figure 6.3.4).

Table 6.3.11 Burnout switch (Switch 1-1)

Position of Switch	Burnout Direction	Burnout Output	Description
L H 1 2 OFF ON	High	>21.6 mA	When optional code C1 or C2 is not specified, the setting is "High".
L H 1 2 OFF ON	Low	<2.4 mA	When optional code C1 or C2 is specified, the setting is "Low".

(2) Setting of Write Protect Switch

The write protect function is to prevent the overwriting of parameters.
Write protection can be carried out using either the write protect switch (Switch 1-2) (See Figure 6.3.4) or software function with parameter setting. If either of these items is activated, the overwriting of parameters will be prohibited.

Table 6.3.12 Write protect switch (Switch 1-2)

Position of Switch	Write Protect Function
L H 1 2 OFF ON	OFF (Factory setting) Parameter can be overwritten.
L H 1 2 OFF ON	ON Parameter can not be overwritten.

NOTE

- If the hardware switch is set to "ON", the condition of preventing parameter overwriting kept until the switch is set to "OFF".
- For write protect by parameter (software), read the user's manual of applicable communication type as listed in Table 1.1.

6.3.3 AXFA11 Remote Transmitter

IMPORTANT

- Removing and installing the cover are necessary for hardware the switches. Perform removing and installing the cover as described in Subsection 4.4.5. When opening the cover, wait for more than 20 minutes after turning off the power. This work must be carried out by the trained personnel having knowledge of safety standard.
- To preserve the safety, do not touch the electrical circuit and the cables except the setting switches.

(1) Loosen the two display unit mounting screws while supporting it with your hand (See Figure 6.3.5).

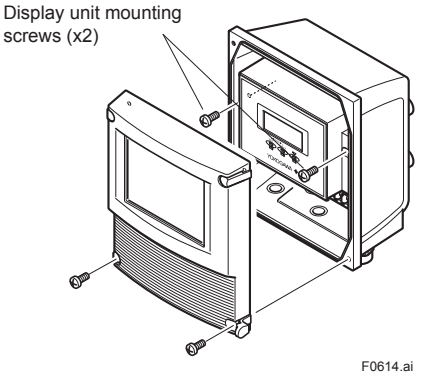

Figure 6.3.5 Removing Mounting Screws of Display Unit

(2) Taking care of the connector and cable connecting to the display unit, move the display unit as shown in Figure 6.3.6, and set the switches. Never remove connector in this case.

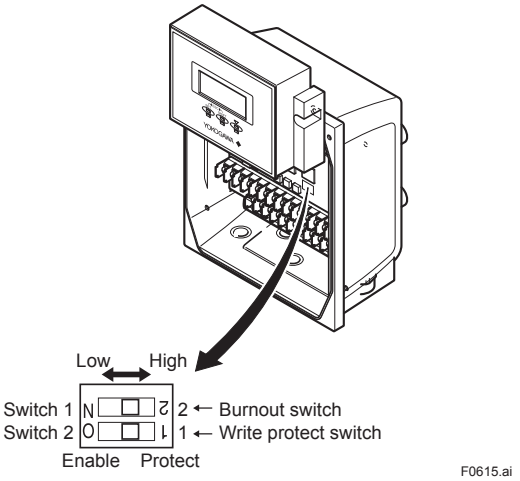

Figure 6.3.6 Hardware switches

(3) After setting the switches, taking care not to entangle the cables, install the display unit with two mounting screws.

(4) Install the cover.

NOTE

On the front of the amplifier's, the burnout switch (i.e., Switch 1) and the write protect switch (i.e., Switch 2) are located adjacent to each other. Accordingly, special care should be taken when making switch settings.

(1) Setting of Burnout Switch

The burnout function sets the direction of current output in situations where the CPU has become damaged. Upon shipment from the manufacturing plant, the burnout direction is set to High (i.e., 25 mA); however, in cases where the optional codes C1 have been specified, the output direction will be set to Low (i.e., 0 mA). Modification of the burnout direction must be carried out using the burnout switch (i.e., Switch 1) (See Figure 6.3.6).

Table 6.3.13 Burnout switch (Switch 1)

Position of Switch	Burnout Direction	Burnout Output	Description
Low High	High	25 mA	When optional code C1 is not specified, the setting is "High".
Low High	Low	0 mA	When optional code C1 is specified, the setting is "Low".

(2) Setting of Write Protect Switch

The write protect function is to prevent the overwriting of parameters.
Write protection can be carried out using either the write protect switch (Switch 2) (See Figure 6.3.6) or software function with parameter setting. If either of these items is activated, the overwriting of parameters will be prohibited.

Table 6.3.14 Write protect switch (Switch 2)

Position of Switch	Write Protect Function
Enable Protect	Enable (Factory setting) Parameter can be overwritten.
Enable Protect	Protect Parameter can not be overwritten.

NOTE

- If the hardware switch is set to "Protect", the condition of preventing parameter overwriting kept until the switch is set to "Enable".
- For AXFA11, read the user's manual of applicable communication type as listed in Table 1.1.

6.4 Setting the correction factor

When applying the correction in 3.1 (10), set the correction factors indicated on the nameplate in Figure 6.4.2 to the flowmeter. Refer to Table 6.4.2 for the parameters that you can enter for correction factors. For the setting method, refer to Sections 5.3, 5.4 and the respective communication type manuals.
As shown in Table 6.4.1, for products manufactured by November 2024, the correction factors are not written on the nameplate or only the correction factors for “both sides flange carbon steel” are indicated. If the nameplate does not have the correction factors indicated, please also check our website.
URL: https://flowmeter.yokogawa.com/csn2303/cf-search
For the location of the manufacturing date, refer to Figure 6.4.3.

6.4.1 Both sides flange carbon steel

If the material of the user-side flanges connecting the flowmeter is carbon steel for both the upstream and downstream (see Figure 6.4.1), set the correction factors to CFL and CFH. For the Enhanced Dual Frequency Excitation, set the correction factors to CFEL and CFEH.

6.4.2 One side flange carbon steel

If the material of the user-side flange on either the upstream or downstream side to which the flowmeter is connected is carbon steel (see Figure 6.4.1), set the correction factors to CF1L and CF1H. For the Enhanced Dual Frequency Excitation, set the correction factors to CFE1L and CFE1H.

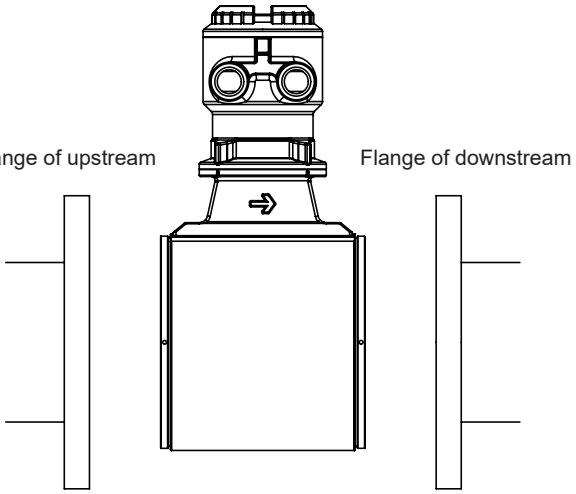

F0616.ai

Figure 6.4.1 Flange connection

Both sides flange carbon steel:
When both the upstream and downstream flanges are carbon steel
One side flange carbon steel:
When either the upstream or downstream flange is carbon steel

IMPORTANT

- Setting the correction factor should be carried out before actual operation.

NOTE

- To cancel correction, set the meter factor in the parameters in Table 6.4.2. The meter factor is written in the METER FACTOR column on the nameplate.

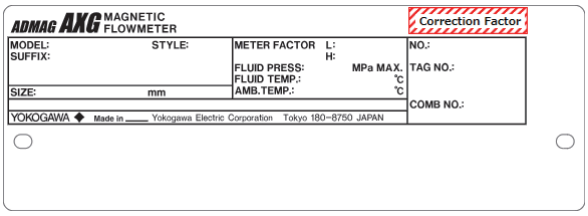

F0617.ai

* For the Enhanced Dual Frequency Excitation, the correction factor is written at the bottom of the nameplate.

Figure 6.4.2 Correction Factor

Table 6.4.1 Correction factor written on name plate

Correction factor written on name plate	Manufacturing date	Correction factor description
No description	Until December, 2023	Both sides flange carbon steel: Web page One side flange carbon steel: Web page
CFL : x.xxxx CFH : x.xxxx	From January, 2024 to November, 2024	Both sides flange carbon steel: Name plate, Web page One side flange carbon steel: Web page
CFL : x.xxxx CF1L : x.xxxx CFH : x.xxxx CF1H : x.xxxx	From November, 2024	Both sides flange carbon steel: Name plate One side flange carbon steel: Name plate

* The manufacturing date and the correction factors written on name plate may vary slightly.
* The appropriate number is written in place of x
* For the Enhanced Dual Frequency Excitation, CFEL, CFEH, CFE1L and CFE1H are added.

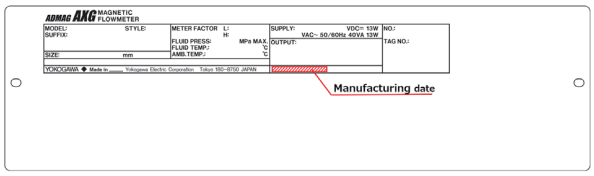

Integral Flowmeter

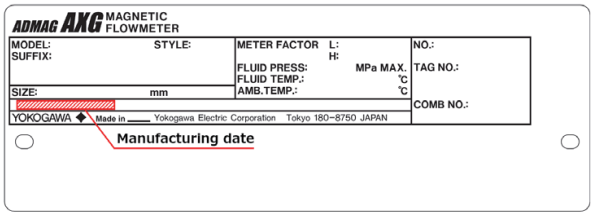

Remote Sensor

F0618.ai

Figure 6.4.3 Manufacturing date

Table 6.4.2 Method for correction setting

Display/ Communication	Parameter Manu Path	Except Enhanced Dual Frequency Excitation			Enhanced Dual Frequency Excitation		
		Parameter Name	Correction factor		Parameter Name	Correction factor	
			Both sides flange carbon steel	One side flange carbon steel		Both sides flange carbon steel	One side flange carbon steel
Display	Device settings ▶ Detailed setting ▶ sensors ▶	Low MF	CFL	CF1L	Low MF EDF	CFEL	CFE1L
		High MF	CFH	CF1H	High MF EDF	CFEH	CFE1H
BRAIN	C:BASIC SETUP ▶	C20:LOW MF	CFL	CF1L	C22:LOW MF(EDF)	CFEL	CFE1L
		C21:HIGH MF	CFH	CF1H	C23:HIGH MF(EDF)	CFEH	CFE1H
HART	Device root menu ▶ Basic setup ▶ Sensor ▶	Low MF	CFL	CF1L	Low MF EDF	CFEL	CFE1L
		High MF	CFH	CF1H	High MF EDF	CFEH	CFE1H
Modbus (Note 1)	Device root menu ▶ Detailed setup ▶ Sensor ▶	Low MF	CFL	CF1L	Low MF EDF	CFEL	CFE1L
		High MF	CFH	CF1H	High MF EDF	CFEH	CFE1H
FOUNDATION Fieldbus (Note 2)	Device Configuration ▶ STB ▶ Device Configuration ▶ Configuration ▶ Sensor ▶	Low MF	CFL	CF1L	Low MF EDF	CFEL	CFE1L
		High MF	CFH	CF1H	High MF EDF	CFEH	CFE1H
PROFIBUS PA (Note 2)	Device ▶ Input ▶ Flow Transducer Block ▶ Flow Tube ▶	CALIBR_FACTOR	CFL	CF1L	Low MF EDF	CFEL	CFE1L
		High MF	CFH	CF1H	High MF EDF	CFEH	CFE1H
EtherNet/IP	Device root menu ▶ Detailed setup ▶ Sensor ▶	Low MF	CFL	CF1L	Low MF EDF	CFEL	CFE1L
		High MF	CFH	CF1H	High MF EDF	CFEH	CFE1H

(Note 1) Modbus Address:

Modbus				
Parameter	**Rel.add**	**Reg.add**	**Type**	**Size**
Low MF	320	40321	Float	2
High MF	322	40323	Float	2
Low MF EDF	324	40325	Float	2
High MF EDF	326	40327	Float	2

(Note 2) FOUNDATION Fieldbus, PROFIBUS PA communication specification devices: Set the mode to “O/S” before changing Parameter settings. After setting, please return to the previous mode.

7. Errors and Countermeasures (Display unit)

The error messages are described in the following tables.
For AXFA11, read the applicable user's manual as listed in Table 1.1.

Explanation of NE107 status:

NE107 status		Status of the device
F	Failure	Device malfunction, Parts malfunction
C	Function Check	The output signal is temporarily invalid for the local operation or manual operation.
S	Out of Specification	The device works in out of specification. The output signal is uncertain for the process or the ambience.
M	Maintenance Required	The maintenance is required in the near future.
N	No Effect	Other issue

■ System Alarm

Device breaks down and causes abnormal measurement.
Device replacement is needed.

NE107 Status	Error Message Display	Error Description	Countermeasure
F	010:Main CPU FAIL	CPU (Main board) failure was detected.	Contact Yokogawa service center.
F	011:Rev calc FAIL	Failure of reverse calculation was detected.	Contact Yokogawa service center.
F	012:Main EEP FAIL	Failure of EEPROM (Main board) was detected.	Turn on the power again within the temperature range. If the problem does not improve, contact Yokogawa service center.
F	013:Main EEP dflt	EEPROM (Main board) was reseted to default values.	Contact Yokogawa service center.
F	014:Snsr bd FAIL	Failure of sensor board was detected.	Contact Yokogawa service center.
F	015:Snsr comm ERR	Communication error of sensor was detected.	Contact Yokogawa service center.
F	016:AD 1 FAIL[Sig]	Failure of A/D transumitter 1 [flow velocity signal] wasdetected.	Contact Yokogawa service center.
F	017:AD 2 FAIL[Excit]	Failure of A/D transmitter 2 [Exciting current] was detected.	Contact Yokogawa service center.
F	018:Coil open	Coil of sensor was disconnected.	Turn off the power, check coil of sensor and excitation cable.
F	019:Coil short	Coil of sensor was shorted.	Contact Yokogawa service center.
F	020:Exciter FAIL	Failure of excitation circuit was detected.	Contact Yokogawa service center.
F	021:PWM 1 stop	Error of pulse width modulation 1 was detected.	Contact Yokogawa service center.
F	022:PWM 2 stop	Error of pulse width modulation 2 was detected.	Contact Yokogawa service center.
F	023:Opt bd mismatch	Mismatch of option board was detected.	Contact Yokogawa service center.
F	024:Opt bd EEP FAIL	Failure of EEPROM (option board) was detected.	Contact Yokogawa service center.
F	025:Opt bd A/D FAIL	Failure of A/D (option board) was detected.	Contact Yokogawa service center.
F	026:Opt bd SPI FAIL	Failure of SPI (option board) was detected.	Contact Yokogawa service center.
F	027:Restore FAIL	Restore of parameters was failed.	Retry parameter restoration.
F	028:Ind bd FAIL	Failure of indicator board was detected.	Check the ambient temperature of display is within the range. If the problem does not improve, contact Yokogawa service center.
F	029:Ind bd EEP FAIL	Failure of EEPROM (indicator board) was detected.	Turn on the power again within the temperature range. If the problem does not improve, contact Yokogawa service center.
F	030:LCD drv FAIL	Failure of LCD driver was detected.	Contact Yokogawa service center.
F	031:Ind bd mismatch	Mismatch of Indicator board was detected.	Contact Yokogawa service center.
F	032:Ind comm ERR	Communication error of indicator board was detected.	Check connection of Indicator & main board.
F	033:microSD FAIL	Failure of microSD card was detected.	Change microSD card.
F	200:Opt bd comm ERR1	Communication error of EtherNet/IP board was detected.	Contact Yokogawa service center.
F	201:Opt bd comm ERR2	Communication error of EtherNet/IP board was detected.	Contact Yokogawa service center.
F	244:Amp EEP FAIL	Amplifier EEPROM failed.	Replace electrical parts such as the amplifier. Or replace the device.
C	249:SoftDL Incmplt	Software download is incomplete.	Check the cables, power supply and MTB SoftDL Error (MTB.SOFTDL_ERROR)
C	250:SoftDL FAIL	Software download has failed.	Check the download file and MTB SoftDL Error (MTB.SOFTDL_ERROR)
F	251:Abnml Boot PRS	Abnormal boot processing was detected at the startingtime.	Check the cables, power and MTB SoftDL Error (MTB.SOFTDL_ERROR)
F	335:IT1 ttl bkup ERR	IT1 Total Backup has failed. Last IT1 Output.Value (IT1.LAST.VALUE) is not saved.	Contact the nearest sales office or service center.
F	339:IT2 ttl bkup ERR	IT2 Total Backup has failed. Last IT2 Output.Value (IT2.LAST.VALUE) is not saved.	Contact the nearest sales office or service center.

■ Process Alarm

The device works normally and some issue of process causes abnormal measurement.
Maintenance work is needed.

NE107 Status	Error Message Display	Error Description	Countermeasure
S	050:Signal overflow	Failure of input signal was detected.	Check signal cable and grounding.
S	051:Empty detect	Empty inside of sensor was detected. (Empty pipe detection)	Fill flow tube with fluid.
N	052:H/L HH/LL alm	Flow rate exceeded upper limit or lower limit.	Check flow rate and setting value.
S	053:Adh over lv 4	The resistance value of the electrodes exceeded Level 4. (Adhesion detection of insulation to electrode)	Clean electrodes.
N	364:AI1 HH Alarm	High High Alarm has occurred.	Check the AI1 Output.Value (AI1.OUT.VALUE) and configuration of AI1 Hi Hi Lim (AI1.HI_HI_LIM), AI1 Hi Hi Pri (AI1.HI_HI_PRI).
N	365:AI1 LL Alarm	Low Low Alarm has occurred.	Check the AI1 Output.Value (AI1.OUT.VALUE) and configuration of AI1 Lo Lo Lim (AI1.LO_LO_LIM), AI1 Lo Lo Pri (AI1.LO_LO_PRI).
N	366:AI1 Hi Alarm	High Alarm has occurred.	Check the AI1 Output.Value (AI1.OUT.VALUE) and configuration of AI1 Hi Lim (AI1.HI_LIM), AI1 Hi Pri (AI1.HI_PRI).
N	367:AI1 Lo Alarm	Low Alarm has occurred.	Check the AI1 Output.Value (AI1.OUT.VALUE) and configuration of AI1 Lo Lim (AI1.LO_LIM), AI1 Lo Pri (AI1. LO_PRI).
N	368:AI2 HH Alarm	High High Alarm has occurred.	Check the AI2 Output.Value (AI2.OUT.VALUE) and configuration of AI2 Hi Hi Lim (AI2.HI_HI_LIM), AI2 Hi Hi Pri (AI2.HI_HI_PRI).
N	369:AI2 LL Alarm	Low Low Alarm has occurred.	Check the AI2 Output.Value (AI2.OUT.VALUE) and configuration of AI2 Lo Lo Lim (AI2.LO_LO_LIM), AI2 Lo Lo Pri (AI2.LO_LO_PRI).
N	370:AI2 Hi Alarm	High Alarm has occurred.	Check the AI2 Output.Value (AI2.OUT.VALUE) and configuration of AI2 Hi Lim (AI2.HI_LIM), AI2 Hi Pri (AI2.HI_PRI).
N	371:AI2 Lo Alarm	Low Alarm has occurred.	Check the AI2 Output.Value (AI2.OUT.VALUE) and configuration of AI2 Lo Lim (AI2.LO_LIM), AI2 Lo Pri (AI2. LO_PRI).
N	372:AI3 HH Alarm	High High Alarm has occurred.	Check the AI3 Output.Value (AI3.OUT.VALUE) and configuration of AI3 Hi Hi Lim (AI3.HI_HI_LIM), AI3 Hi Hi Pri (AI3.HI_HI_PRI).
N	373:AI3 LL Alarm	Low Low Alarm has occurred.	Check the AI3 Output.Value (AI3.OUT.VALUE) and configuration of AI3 Lo Lo Lim (AI3.LO_LO_LIM), AI3 Lo Lo Pri (AI3.LO_LO_PRI).
N	374:AI3 Hi Alarm	High Alarm has occurred.	Check the AI3 Output.Value (AI3.OUT.VALUE) and configuration of AI3 Hi Lim (AI3.HI_LIM), AI3 Hi Pri (AI3.HI_PRI).
N	375:AI3 Lo Alarm	Low Alarm has occurred.	Check the AI3 Output.Value (AI3.OUT.VALUE) and configuration of AI3 Lo Lim (AI3.LO_LIM), AI3 Lo Pri (AI3. LO_PRI).
N	376:AI4 HH Alarm	High High Alarm has occurred.	Check the AI4 Output.Value (AI4.OUT.VALUE) and configuration of AI4 Hi Hi Lim (AI4.HI_HI_LIM), AI4 Hi Hi Pri (AI4.HI_HI_PRI).
N	377:AI4 LL Alarm	Low Low Alarm has occurred.	Check the AI4 Output.Value (AI4.OUT.VALUE) and configuration of AI4 Lo Lo Lim (AI4.LO_LO_LIM), AI4 Lo Lo Pri (AI4.LO_LO_PRI).
N	378:AI4 Hi Alarm	High Alarm has occurred.	Check the AI4 Output.Value (AI4.OUT.VALUE) and configuration of AI4 Hi Lim (AI4.HI_LIM), AI4 Hi Pri (AI4.HI_PRI).
N	379:AI4 Lo Alarm	Low Alarm has occurred.	Check the AI4 Output.Value (AI4.OUT.VALUE) and configuration of AI4 Lo Lim (AI4.LO_LIM), AI4 Lo Pri (AI4. LO_PRI).
N	392:PID HH Alarm	High High Alarm has occurred.	Check the PID Output.Value (PID.OUT.VALUE) and configuration of PID Hi Hi Lim (PID.HI_HI_LIM), PID Hi Hi Pri (PID.HI_HI_PRI).
N	393:PID LL Alarm	Low Low Alarm has occurred.	Check the PID Output.Value (PID.OUT.VALUE) and configuration of PID Lo Lo Lim (PID.LO_LO_LIM), PID Lo Lo Pri (PID.LO_LO_PRI).
N	394:PID Hi Alarm	High Alarm has occurred.	Check the PID Output.Value (PID.OUT.VALUE) and configuration of PID Hi Lim (PID.HI_LIM), PID Hi Pri (PID.HI_PRI).
N	395:PID Lo Alarm	Low Alarm has occurred.	Check the PID Output.Value (PID.OUT.VALUE) and configuration of PID Lo Lim (PID.LO_LIM), PID Lo Pri (PID.LO_PRI).
N	500:AI1 LL Alarm	Flow rate is above AI1 Lo Lo alarm threshold.	Check output value or parameter setting.
N	501:AI1 HH Alarm	Flow rate is above AI1 Hi Hi alarm threshold.	Check output value or parameter setting.
N	502:AI2 LL Alarm	Flow rate is above AI2 Lo Lo alarm threshold.	Check output value or parameter setting.
N	503:AI2 HH Alarm	Flow rate is above AI2 Hi Hi alarm threshold.	Check output value or parameter setting.

■ Setting Alarm

The device works normally but parameter setting error occurs.
Parameter setting is needed.

NE107 Status	Error Message Display	Error Description	Countermeasure
S	060:Span cfg ERR	Setting error of flow span was detected. (fulfill "0.05 m/s < Span < 16 m/s")	Check or change span parameter setting.
S	061:PV F cfg ERR	PV was set to flow noise.	Check or change PV FLOW SEL parameter setting.
S	062:AO 1 4-20 lmt	Setting error of Current output 1 was detected. (fulfill "LRV < HRV")	Check or change Analog output 1 parameter setting.
S	063:AO 2 4-20 lmt	Setting error of Current output 2 was detected. (fulfill "LRV < HRV")	Check or change Analog output 2 parameter setting.
N	065:H/L cfg ERR	Setting error of ararm high/low limit function was detected. (fulfill "Hi Alarm - Lo Alarm > H/L Hys" and "HH Alarm - LL Alarm > HH/LL Hys")	Check and change H/L, HH/LL parameter setting.
S	066:Density cfg ERR	Setting error of density value was detected when PV was set to mass flow rate.	Check and change Density parameter setting.
S	067:Pls 1 cfg ERR	Setting error of Pulse output 1 was detected.	Change Pulse output 1 parameter setting.
S	068:Pls 2 cfg ERR	Setting error of Pulse output 2 was detected.	Check and change Pulse output 2 parameter setting.
C	069:Nomi size cfg	Configuration error of nominal size was detected. (fulfill "0.99 mm < nominal size < 3000.10 mm (0.01 inch < nominal size < 120.10 inch)")	Check and change nominal paramter setting.
C	070:Adh cfg ERR	Setting error of electrode adhesion detection function was detected. (fulfill "Level1 < Level2 < Level3 < Level4")	Check and change adhesion parameter setting.
C	071:FLN cfg ERR	Setting error of flow noise verification function was detected. (fulfill "Level1 < Level2 < Level3 < Level4")	Change flow noise paramter setting.
C	072:Log not start	Data logging failed to start.	Insert microSD card.
C	247:RB O/S Mode	Resource Block is in O/S mode.	Change the RB Block Mode.Target (RB.MODE_BLK.Target) to Automode.
C	300:AI1 O/S Mode	AI1 Block is in O/S mode.	Change the AI1 Block Mode.Target (AI1.MODE_BLK.Target) to Auto or other mode.
C	301:AI1 Man Mode	AI1 Block is in Man mode.	Change the AI1 Block Mode.Target (AI1.MODE_BLK.Target) to Auto or other mode.
C	302:AI1 Not Schedule	AI1 Block is not scheduled.	ScheduleAI1 Block.
C	303:AI1 Simulate Act	AI1 block is in simulation mode.	Change the AI1 Simulation En/Disable (AI1.SIMULATE.SIMULATE_ENABLE) to Disabled.
C	304:AI2 O/S Mode	AI2 Block is in O/S mode.	Change the AI2 Block Mode.Target (AI2.MODE_BLK.Target) to Auto or other mode.
C	305:AI2 Man Mode	AI2 Block is in Man mode.	Change the AI2 Block Mode.Target (AI2.MODE_BLK.Target) to Auto or other mode.
C	306:AI2 Not Schedule	AI2 Block is not scheduled.	ScheduleAI2 Block.
C	307:AI2 Simulate Act	AI2 block is in simulation mode.	Change the AI2 Simulation En/Disable (AI2.SIMULATE.SIMULATE_ENABLE) to Disabled.
C	308:AI3 O/S Mode	AI3 Block is in O/S mode.	Change the AI3 Block Mode.Target (AI3.MODE_BLK.Target) to Auto or other mode.
C	309:AI3 Man Mode	AI3 Block is in Man mode.	Change the AI3 Block Mode.Target (AI3.MODE_BLK.Target) to Auto or other mode.
C	310:AI3 Not Schedule	AI3 Block is not scheduled.	ScheduleAI3 Block.
C	311:AI3 Simulate Act	AI3 block is in simulation mode.	Change the AI3 Simulation En/Disable (AI3.SIMULATE.SIMULATE_ENABLE) to Disabled.
C	312:AI4 O/S Mode	AI4 Block is in O/S mode.	Change the AI4 Block Mode.Target (AI4.MODE_BLK.Target) to Auto or other mode.
C	313:AI4 Man Mode	AI4 Block is in Man mode.	Change the AI4 Block Mode.Target (AI4.MODE_BLK.Target) to Auto or other mode.
C	314:AI4 Not Schedule	AI4 Block is not scheduled.	ScheduleAI4 Block.
C	315:AI4 Simulate Act	AI4 block is in simulation mode.	Change the AI4 Simulation En/Disable (AI4.SIMULATE.SIMULATE_ENABLE) to Disabled.
C	328:PID O/S Mode	PID Block is in O/S mode.	Change the PID Block Mode.Target (PID.MODE_BLK.Target) to Auto or other mode.
C	329:PID Man Mode	PID Block is in Man mode.	Change the PID Block Mode.Target (PID.MODE_BLK.Target) to Auto or other mode.
C	330:PID Not Schedule	PID Block is not scheduled.	Schedule PID Block.
C	331:PID Bypass Mode	PID Block is in Bypass mode.	Change the parameter of Bypass (PID.BYPASS) to OFF.
C	332:IT1 O/S mode	IT1 Block is in O/S mode.	Change the IT1 Block Mode.Target (IT1.MODE_BLK.Target) to Auto or other mode.

NE107 Status	Error Message Display	Error Description	Countermeasure
C	333:IT1 Man mode	IT1 Block is in Man mode.	Change the IT1 Block Mode.Target (IT1.MODE_BLK.Target) to Auto or other mode.
C	334:IT1 Not Schedule	IT1 Block is not scheduled.	Schedule IT1 Block.
C	336:IT2 O/S Mode	IT2 Block is in O/S mode.	Change the IT2 Block Mode.Target (IT2.MODE_BLK.Target) to Auto or other mode.
C	337:IT2 Man Mode	IT2 Block is in Man mode.	Change the IT2 Block Mode.Target (IT2.MODE_BLK.Target) to Auto or other mode.
C	338:IT2 Not Schedule	IT2 Block is not scheduled.	Schedule IT2 Block.
C	340:DI1 O/S Mode	DI1 Block is in O/S mode.	Change the DI1 Block Mode.Target (DI1.MODE_BLK.Target) to Auto or other mode.
C	341:DI1 Man Mode	DI1 Block is in Man mode.	Change the DI1 Block Mode.Target (DI1.MODE_BLK.Target) to Auto or other mode.
C	342:DI1 Not Schedule	DI1 Block is not scheduled.	ScheduleDI1 Block.
C	343:DI1 Simulate Act	DI1 block is in simulation mode.	Change the DI1 Simulation En/Disable (DI1.SIMULATE.SIMULATE_ENABLE) to Disabled.
C	344:DI2 O/S Mode	DI2 Block is in O/S mode.	Change the DI2 Block Mode.Target (DI2.MODE_BLK.Target) to Auto or other mode.
C	345:DI2 Man Mode	DI2 Block is in Man mode.	Change the DI2 Block Mode.Target (DI2.MODE_BLK.Target) to Auto or other mode.
C	346:DI2 Not Schedule	DI2 Block is not scheduled.	ScheduleDI2 Block.
C	347:DI2 Simulate Act	DI2 block is in simulation mode.	Change the DI2 Simulation En/Disable (DI2.SIMULATE.SIMULATE_ENABLE) to Disabled.
C	348:DI3 O/S Mode	DI3 Block is in O/S mode.	Change the DI3 Block Mode.Target (DI3.MODE_BLK.Target) to Auto or other mode.
C	349:DI3 Man Mode	DI3 Block is in Man mode.	Change the DI3 Block Mode.Target (DI3.MODE_BLK.Target) to Auto or other mode.
C	350:DI3 Not Schedule	DI3 Block is not scheduled.	ScheduleDI3 Block.
C	351:DI3 Simulate Act	DI3 block is in simulation mode.	Change the DI3 Simulation En/Disable (DI3.SIMULATE.SIMULATE_ENABLE) to Disabled.
C	352:AR O/S Mode	AR Block is in O/S mode.	Change the AR Block Mode.Target (AR.MODE_BLK.Target) to Auto or other mode.
C	353:AR Man Mode	AR Block is in Man mode.	Change the AR Block Mode.Target (AR.MODE_BLK.Target) to Auto or other mode.
C	354:AR Not Scheduled	AR Block is not scheduled.	Schedule AR Block.
C	356:MAO O/S Mode	MAO Block is in O/S mode.	Change the MAO Block Mode.Target (MAO.MODE_BLK.Target) to Auto or other mode.
C	357:MAO Not Schedule	MAO Block is not scheduled.	Schedule MAO Block.
C	359:No FB Scheduled	No Function Block is scheduled.	Schedule Function Block or check the LAS communication.
C	360:STB O/S Mode	Sensor Transducer Block is in O/S mode.	Change the STB Block Mode.Target (STB.MODE_BLK.Target) to Auto mode.
C	361:DTB O/S Mode	Diagnostic Transducer Block is in O/S mode.	Change the DTB Block Mode.Target (DTB.MODE_BLK.Target) to Auto mode.
C	362:MTB O/S Mode	Maintenance Transducer Block is in O/S mode.	Change the MTB Block Mode.Target (MTB.MODE_BLK.Target) to Auto mode.
C	363:LTB O/S Mode	LCD Transducer Block is in O/S mode.	Change the LTB Block Mode.Target (LTB.MODE_BLK.Target) to Auto mode.
C	504:TOT1 Unit ERR	The flow rate selected in CHANNEL and the unit selected in TOT1 unit are combined incorrectly.	Check unit parameter setting.
C	505:TOT2 Unit ERR	The flow rate selected in CHANNEL and the unit selected in TOT2 unit are combined incorrectly.	Check unit parameter setting.
C	506:TOT3 Unit ERR	The flow rate selected in CHANNEL and the unit selected in TOT3 unit are combined incorrectly.	Check unit parameter setting.
C	507:PB O/S Mode	The PB block is in the O/S mode.	Change the PB block mode.
C	508:AI1 O/S Mode	The AI1 block is in the O/S mode.	Change the AI1 block mode.
C	509:AI2 O/S Mode	The AI2 block is in the O/S mode.	Change the AI2 block mode.
C	510:TOT1 O/S Mode	The TOT1 block is in the O/S mode.	Change the TOT1 block mode.
C	511:TOT2 O/S Mode	The TOT2 block is in the O/S mode.	Change the TOT2 block mode.
C	512:TOT3 O/S Mode	The TOT3 block is in the O/S mode.	Change the TOT3 block mode.
C	513:DI1 O/S Mode	The DI1 block is in the O/S mode.	Change the DI1 block mode.
C	514:DI2 O/S Mode	The DI2 block is in the O/S mode.	Change the DI2 block mode.
C	515:AO O/S Mode	The AO1 block is in the O/S mode.	Change the AO1 block mode.
C	516:FTB O/S Mode	The FTB block is in the O/S mode.	Change the FTB block mode.

NE107 Status	Error Message Display	Error Description	Countermeasure
C	517:LTB O/S Mode	The LTB block is in the O/S mode.	Change the LTB block mode.
C	518:DTB O/S Mode	The DTB block is in the O/S mode.	Change the DTB block mode.
C	519:M1TB O/S Mode	The MTB1 block is in the O/S mode.	Change the MTB1 block mode.
C	520:M2TB O/S Mode	The MTB2 block is in the O/S mode.	Change the MTB2 block mode.
C	521:PB Simulate Act	PB simulations is running.	Disable SIMULATE. Simulate En/Disable of the PB block.
C	522:AI1 Simulate Act	AI1 simulations is running.	Disable SIMULATE. Simulate En/Disable of the AI1 block.
C	523:AI2 Simulate Act	AI2 simulations is running.	Disable SIMULATE. Simulate En/Disable of the AI2 block.
C	527:DI1 Simulate Act	DI1 simulations is running.	Disable SIMULATE. Simulate En/Disable of the DI1 block.
C	528:DI2 Simulate Act	DI2 simulations is running.	Disable SIMULATE. Simulate En/Disable of the DI2 block.
C	529:AO Simulate Act	AO1 simulations is running.	Disable SIMULATE. Simulate En/Disable of the AO1 block.
C	530:AI1 Man Mode	The AI1 block is in the MAN mode.	Change the AI1 block mode.
C	531:AI2 Man Mode	The AI2 block is in the MAN mode.	Change the AI2 block mode.
C	532:TOT1 Man Mode	The TOT1 block is in the MAN mode.	Change the TOT1 block mode.
C	533:TOT2 Man Mode	The TOT2 block is in the MAN mode.	Change the TOT2 block mode.
C	534:TOT3 Man Mode	The TOT3 block is in the MAN mode.	Change the TOT3 block mode.
C	535:DI1 Man Mode	The DI1 block is in the MAN mode.	Change the DI1 block mode.
C	536:DI2 Man Mode	The DI2 block is in the MAN mode.	Change the DI2 block mode.
C	537:AO Man Mode	The AO1 block is in the MAN mode.	Change the AO1 block mode.

■ Warning

The device works normally and measurement is also normal but warning occurs.

NE107 Status	Error Message Display	Error Description	Countermeasure
S	080:AO 1 saturate	Saturation of Analog output 1 was detected.	Check process value and current output 1 parameter setting.
S	081:AO 2 saturate	Saturation of Analog output 2 was detected.	Check process value and current output 2 parameter setting.
S	082:Pls 1 saturate	Saturation of Pulse output 1 was detected.	Check process value and pulse output 1 parameter setting.
S	083:Pls 2 saturate	Saturation of Pulse output 2 was detected.	Check process value and pulse output 2 parameter setting.
S	084:AI saturate	Saturation of Analog input was detected.	Check current input value and current input parameter setting.
C	085:Cable miscon	Misconnection of cable was detected.	Check the signal cable and excitation cable connection.
C	086:Coil insulation	Insulation deterioration of coil was detected.	Contact Yokogawa service center.
M	087:Adhesion lv 3	The resistance value of electrode exceeded Level 3. (Adhesion detection of insulation to electrode)	Recommend cleaning electrode.
N	088:LC warn	Decrease of conductivity was detected.	Check fluid conductivity.
M	089:Insu detect	Insulation deterioration of electrode was detected.	Contact Yokogawa service center.
N	090:FLN over lv 3	Flow noise exceeded Level 3. (Detection of flow noise)	Check fluid conductivity or bubble.
N	091:FLN over lv 4	Flow noise exceeded Level 4. (Detection of flow noise)	Check fluid conductivity or bubble.
C	092:AZ warn	Result of Autozero adjustment |Mag Flow Zero| exceeded 10 cm/s.	Check fluid is stopped when executing auto-zero adjustment.
C	093:Verif warn	Interruption of verification function was detected.	Execute Verification again.
C	094:Fact noise warn	Fluctuation of flow became larger.	Check the fluid.
C	095:Simulate active	Test mode was executed for any of Flow velocity, Volumetric flow rate, Mass flow rate, Calorie, Current output, Pulse output, Status input, Status output.	Release simulation or test mode.
S	096:AO 1 fix	It was detected that fixied value is set to Current output 1.	Check current output 1 is test mode or not.
S	097:AO 2 fix	It was detected that fixied value is set to Current output 2.	Check current output 2 is test mode or not.
S	098:Pls 1 fix	It was detected that fixied value is set to Pulse output 1.	Check pulse output 1 is test mode or not.
S	099:Pls 2 fix	It was detected that fixied value is set to Pulse output 2.	Check pulse output 2 is test mode or not.
S	100:AI fix	It was detected that fixied value is set to Current input.	Check current input is test mode or not.
C	101:Param restore run	Restore function of parameter is running.	—
N	102:Disp over	Number of digits available for display exceeded the limit.	Check Display format parameter.
N	103:SD size warn	Free space of microSD card decreased to less than 10%.	microSD card may run out of memory space.
M	104:Bkup incmplt	Parameter backup failed.	Retry parameter backup.
S	105:SD mismatch	Mismatch of microSD card was detected.	Change microSD card.
M	106:SD removal ERR	Removal of microSD card failed.	Remove microSD in appropriate rocedure.
N	131:Trans mismatch	Mismatch of sensor and transmitter was detected.	Contact Yokogawa service center.

■ Information

The device works normally and measurement is also normal. Just reference information.

NE107 Status	Error Message Display	Error Description	Countermeasure
N	120:Watchdog	Error of Watchdog timer was detected.	Contact Yokogawa service center.
N	121:Power off	Power-off was detected.	—
N	122:Inst power FAIL	Instantaneous power failure was detected.	—
N	123:Param bkup run	Parameter backup is running.	—
N	124:Data log run	Data log is running.	—
N	130:DevID not enter	No data entry of Device ID was detected.	Contact Yokogawa service center.
N	132:Modbus cfgupdate	The Modbus configuration has been changed, but the device is not operating according to its configuration.	Restart Modbus communication.
N	133:G/A mismatch	As a result of self-test, inconsistency of internal circuit was detected.	Contact Yokogawa service center.
N	246:Simulate SW OFF	Writing to parameters is locked.	Change the RB Write Lock (RB. WRITE_LOCK) to Not Locked or turn off the hardware write lock switch, depending on RB Feature Selection (RB.FEATURE_SEL).
N	248:Simulate SW ON	Software or hardware simulation switch is ON.	Delete the value of MTB Sim Enable Message (MTB.SIM_ENABLE_MSG) or turn off the hardware simulation switch.
N	560:Id Num Violation	Ident number is wrong.	Contact Yokogawa service center.

Revision Information

- Title : ADMAG TI Series AXG Magnetic Flowmeter Installation Manual
- Manual No. : IM 01E22A01-01EN

Edition	Date	Page	Revised Item
1st	June 2017	—	New publication
2nd	Sep. 2018	Front page 1 5 6 7 36 37 44 45 49 50 56 61 65	Small revisions and add notes for explosion protected type. Add new manual numbers and small revisions. Add (10) to 1.1. Add an item to IMPORTANT. Add small revisions. Revise Figure 3.6.3. Add an item to CAUTION. Add an item to CAUTION. Add CAUTION. Revise Figure 4.5.2, 4.5.3. Add an item to CAUTION. Add CAUTION. Revise figure of 5.2.1. Revise figure 5.5. Revise figure 6.3.1.
3rd	Oct. 2018	1 2 7 37, 39, 43, 49 39 47 57 63 64 65, 66 68 to 70	Add new manual number for Modbus communication type. Add trademark informations (HART, Modbus). Revise the table for blanking plug quantity. Add the WARNING for explosion protection type. Add the explanation of cable for Modbus communication. Add the table for connection terminal for Modbus communication type. Add the explanations for Modbus communication. Add the explanation of Modbus configuration tool. Add the information of parameter for Modbus communication. Add the explanation of hardware switch setting for Modbus communication type. Revise the table of error messages.
4th	June 2019	8 13 30 31 32	Add Name Plate for option code 3A on Fig. 2.3 Add warning for option code 3A Add explanation of 3-A in (2) Mounting Procedure Add caution for option code 3A Add torque for 3-A on Table 3.3.16.
5th	July 2019	Front page 1 2 3 7 32 39 48 59 61 62 66 67 68 69 73 to 77	Add AXG1A. Add AXG1A. Add Fieldbus to Trademarks. Add EN number to (1). Add Fieldbus to *2. Add 3A to Table 3.3.16. Add 4.2.4. Add Fieldbus. Add Fieldbus to (2), (3). Add Fieldbus to Parameter form. Add notes to 5.4.1, 5.4.3. Add 5.9.2 and revise (2) HART rev. Add a note of Fieldbus to 6.2. Revise Figure 6.3.1. Add Simulation Switch. Revise Section7.
6th	Oct. 2019	1 7 11 26 to 28 48 54 56 57	Add new manual number for FM (USA) Explosion Protection Type. Add new "communication and I/O code": DT and JT. Revise the explanation of IMPORTANT in "Mounting orientation". Revise the explanation of "Note". Add new "communication and I/O code": DP to DT and JP to JT. Revise the information of "External power supply" and "Load resistance" in "Passive current output". Add the information of "Passive Pulse output [P/Sout] NAMUR". Add the information of "Passive status output [P/Sout] NAMUR".
7th	Dec. 2019	1	Add new manual number for FM (Canada) Explosion Protection Type.
8th	Mar. 2020	3 62	1.1(1) Added description of altitude at installation site. 5.3 Change the procedure from Display Mode to Setting Mode and add a note of software rev.

Edition	Date	Page	Revised Item
9th	Nov. 2020	1 7 10 66 67	Revise Table 1.1 Document No. Minor correction (check visually) Minor correction (Straight Pipe Length) Revise 5.7.2(1) Devise revision Revise 5.7.2(2), 5.8.2 Devise revision
10th	May 2021	1 2 39 48 59 60, 63 69 71 to 73 77 to 81	Add new manual number for PROFIBUS PA Type. Add PROFIBUS PA to Trademarks. Add the explanation of cable for PROFIBUS PA type. Add the table of connection terminal for PROFIBUS PA type. Correction of errors. Add the explanations for PROFIBUS PA type. Add the explanation of PROFIBUS PA configuration tool. Add the explanation of hardware switch setting for PROFIBUS PA type. Revise the table of error messages.
11th	Sep. 2021	26 to 28	Add torque values for EN PN25 flange.
12th	Apr. 2022	— 6	Added note on EtherNet/IP communication Ambient temperature and ambient humidity added
13th	Nov. 2024	7 11 31 79, 80	Corrected product attached parts Added note on Counter Flange Material Deleted combination of J□□ and W2 Added note on Setting the correction factor
14th	Dec. 2024	19, 21, 22 79, 80	Revise the table of tightening torque values Add Enhanced Dual Frequency Excitaion
15th	May 2025	7, 15, 18	Add for 50 mm / 2 in, Submersible, JIS 20K Wafer stud bolts
16th	Sep. 2025	26, 27, 28	Revise the table of tightening torque values