# General Specifications

EJA130E
Differential Pressure Transmitter

DPharp EJA™

**GS 01C31B04-01EN** [Style: S2]

*The high performance differential pressure transmitter EJA130E features single crystal silicon resonant sensor and is suitable to measure liquid, gas, or steam flow as well as liquid level, density and pressure. EJA130E outputs a 4 to 20 mA DC signal corresponding to the measured differential pressure. Its accurate and stable sensor can also measure the static pressure which can be shown on the integral indicator or remotely monitored via BRAIN or HART communications. Other key features include quick response, remote set-up using communications and self-diagnostics. FOUNDATION Fieldbus, PROFIBUS PA and 1 to 5 V DC with HART (Low Power) protocol types are also available. EJA-E series models in their standard configuration, with the exception of the Fieldbus, PROFIBUS and Low Power types, are certified as complying with SIL 2 for safety requirement.*

## ■ STANDARD SPECIFICATIONS

Refer to GS 01C31T02-01EN for Fieldbus communication type and GS 01C31T04-01EN for PROFIBUS PA communication type for the items marked with "◊."

### □ SPAN AND RANGE LIMITS

| Measurement Span/Range | | kPa | $inH_2O$ (/D1) | mbar (/D3) | $mmH_2O$ (/D4) |
|---|---|---|---|---|---|
| M | Span | 1 to 100 | 4 to 400 | 10 to 1000 | 100 to 10000 |
| | Range | -100 to 100 | -400 to 400 | -1000 to 1000 | -10000 to 10000 |
| H | Span | 5 to 500 | 20 to 2000 | 50 to 5000 | 0.05 to 5 $kgf/cm^2$ |
| | Range | -500 to 500 | -2000 to 2000 | -5000 to 5000 | -5 to 5 $kgf/cm^2$ |

### □ PERFORMANCE SPECIFICATIONS

Zero-based calibrated span, linear output, wetted parts material code S and silicone oil, unless otherwise mentioned.
For Fieldbus and PROFIBUS PA communication types, use calibrated range instead of span in the following specifications.

**Specification Conformance**

EJA-E series ensures specification conformance to at least ±3σ.

**Reference Accuracy of Calibrated Span**

(includes terminal-based linearity, hysteresis, and repeatability)

| Measurement span | | H |
|---|---|---|
| Reference accuracy | X ≤ span | ±0.055% of Span |
| | X > span | ±(0.005+0.01 URL/span)% of Span |
| X | | 100 kPa (400 $inH_2O$) |
| URL (upper range limit) | | 500 kPa (2000 $inH_2O$) |

| Measurement span | | M |
|---|---|---|
| Reference accuracy | X ≤ span | ±0.055% of Span |
| | X > span | ±(0.005+0.005 URL/span)% of Span |
| X | | 10 kPa (40 $inH_2O$) |
| URL (upper range limit) | | 100 kPa (400 $inH_2O$) |

**Square Root Output Accuracy**

The square root accuracy is a percent of flow span.

| Output | Accuracy |
|---|---|
| 50% or Greater | Same as reference accuracy |
| 50% to Dropout point | $\frac{\text{Reference accuracy} \times 50}{\text{Square root output (\%)}}$ |

**Ambient Temperature Effects per 28°C (50°F) Change**

| Capsule | Effect |
|---|---|
| H | ±(0.07% Span + 0.015% URL) |
| M | ±(0.07% Span + 0.02% URL) |

YOKOGAWA ◆

Yokogawa Electric Corporation
2-9-32, Nakacho, Musashino-shi, Tokyo, 180-8750 Japan
Tel.: 81-422-52-5690 Fax.: 81-422-52-2018

GS 01C31B04-01EN
©Copyright June 2012
19th Edition Feb. 2022

**Static Pressure Effects per 6.9 MPa (1000 psi) Change**

**Span Effects**
M and H capsules
±0.1% of span

**Effect on Zero**

| Capsule | Effect |
|---|---|
| H, M | ±0.028% URL |

**Overpressure Effects**
Overpressure condition: up to maximum working pressure
M and H capsules, except for gold-plated diaphragm.
±0.03% of URL

**Stability (All normal operating condition, including overpressure effects)**
M and H capsules
±0.1% of URL per 10 years

**Power Supply Effects(Output signal code D and J)**
±0.005 % per Volt (from 21.6 to 32 V DC, 350Ω)

**Vibration Effects**
Amplifier housing code 1 and 3:
Less than 0.1% of URL when tested per the requirements of IEC60770-1 field or pipeline with high vibration level (10-60 Hz, 0.21 mm displacement/60-2000 Hz 3 g)
Amplifier housing code 2:
Less than ±0.1% of URL when tested per the requirements of IEC60770-1 field with general application or pipeline with low vibration level (10-60 Hz 0.15mm displacement /60-500 Hz 2g)

**Mounting Position Effects**
Rotation in diaphragm plane has no effect. Tilting up to 90 degree will cause zero shift up to 0.4 kPa (1.6 in$H_2O$) which can be corrected by the zero adjustment.

**Response Time (Differential pressure) "◊"**
M and H capsules: 150 ms
When amplifier damping is set to zero and including dead time of 45 ms (nominal)

**Static Pressure Signal Range and Accuracy (For monitoring via communication or on indicator. Includes terminal-based linearity, hysteresis, and repeatability)**

**Range**
Upper Range Value and Lower Range Value of the static pressure can be set in the range between 0 and Maximum Working Pressure(MWP). The upper range value must be greater than the lower range value. Minimum setting span is 0.5 MPa(73 psi). Measuring either the pressure of high pressure side or low pressure side is user-selectable.

**Accuracy**
Absolute Pressure
1 MPa or higher: ±0.5% of span
Less than 1 MPa: ±0.5%×(1 MPa/span) of span
Gauge Pressure Reference
Gauge pressure reference is 1013 hPa (1 atm)
Note: Gauge pressure variable is based on the above fixed reference and thus subject to be affected by the change of atomospheric pressure.

## □ FUNCTIONAL SPECIFICATIONS

**Output "◊"**

**For 4 to 20 mA HART / BRAIN (Output signal code D and J)**
Two wire 4 to 20 mA DC output with digital communications, linear or square root programmable. BRAIN or HART FSK protocol are superimposed on the 4 to 20 mA signal.
Output range: 3.6 mA to 21.6 mA
Output limits conforming to NAMUR NE43 can be pre-set by option code C2 or C3.

**For 1 to 5 V HART (Output signal code Q)**
Three or four wire low power 1 to 5 V DC output with HART, linear or square root programmable. HART protocol are superimposed on the 1 to 5 V DC signal.
Output range: 0.9 V to 5.4 V DC

**Failure Alarm**

**For 4 to 20 mA HART / BRAIN (Output signal code D and J)**
Analog output status at CPU failure and hardware error;
Up-scale: 110%, 21.6 mA DC or more (standard)
Down-scale: −5%, 3.2 mA DC or less

**For 1 to 5 V HART (Output signal code Q)**
Analog output status at CPU failure and hardware error;
Up-scale: 110%, 5.4 V DC or more (standard)
Down-scale: −5%, 0.8 V DC or less

**Damping Time Constant (1st order)**
Amplifier damping time constant is adjustable from 0.00 to 100.00 sec by software and added to response time.
Note: For BRAIN protocol type, when amplifier software damping is set to less than 0.5 sec, communication may occasionally be unavailble during the operation, especially while output changes dynamically. The default setting of damping ensures stable communication.

**Update Period "◊"**
Differential pressure: 45 ms
Static pressure: 360 ms

**Zero Adjustment Limits**
Zero can be fully elevated or suppressed, within the lower and upper range limits of the capsule.

**External Zero Adjustment**
External zero is continuously adjustable with 0.01% incremental resolution of span. Re-range can be done locally using the digital indicator with rangesetting switch.

**Integral Indicator (LCD display, optional) "◊"**
5-digit numerical display, 6-digit unit display and bar graph.
The indicator is configurable to display one or up to four of the following variables periodically.;
Measured differential pressure, differential pressure in %, scaled differential pressure, measured static pressure. See also "Factory Setting."

**Local Parameter Setting (Output signal code D, J and Q)**
Parameter configuration by the external zero adjustment screw and push button (Integral indicator code E) offers easy and quick setup for parameters of Loop test, Tag number, Unit, LRV, URV, Damping, Output mode (linear/square root), Display out 1, and Re-range by applying actual pressure (LRV/URV) and Device Information.

All Rights Reserved. Copyright © 2012, Yokogawa Electric Corporation

**Burst Pressure Limits**
132 MPa (19100 psi)

**Self Diagnostics**
CPU failure, hardware failure, configuration error, and over-range error for differential pressure, static pressure and capsule temperature.
User-configurable process high/low alarm for differential pressure and static pressure is also available.

**Signal Characterizer**
**(Output signal code D, J and Q)**
User-configurable 10-segment signal characterizer for 4 to 20 mA output.

**SIL Certification**
EJA-E series transmitters except Fieldbus, PROFIBUS PA and 1-5V DC with HART (Low Power) communication types are certified in compliance with the following standards;
IEC 61508: 2010;
Functional Safety of Electrical/electronic/ programmable electronic related systems; SIL 2 capability for single transmitter use, SIL 3 capability for dual transmitter use.
Reliability Data different depending on hardware and software revision.
For details, refer to Functional Safety Data Sheet. (Document number: TI 01C25A05-01EN or TI 01C25A05-21EN for option code SLT )
The document can be downloaded from the website of Yokogawa.
(Website address: https://www.yokogawa.com/ solutions/products-platforms/field-instruments/)

## □ NORMAL OPERATING CONDITION (Optional features or approval codes may affect limits.)

**Ambient Temperature Limits**
−40 to 85°C (−40 to 185°F)
−30 to 80°C (−22 to 176°F) with LCD display

**Process Temperature Limits**
−40 to 120°C (−40 to 248°F)

**Ambient Humidity Limits**
0 to 100% RH

**Working Pressure Limits (Silicone oil)**

**Maximum Pressure Limits (MWP)**

| | |
|---|---|
| M and H capsule | 32 MPa (4500 psi) |

**Minimum Pressure Limit**
See graph below

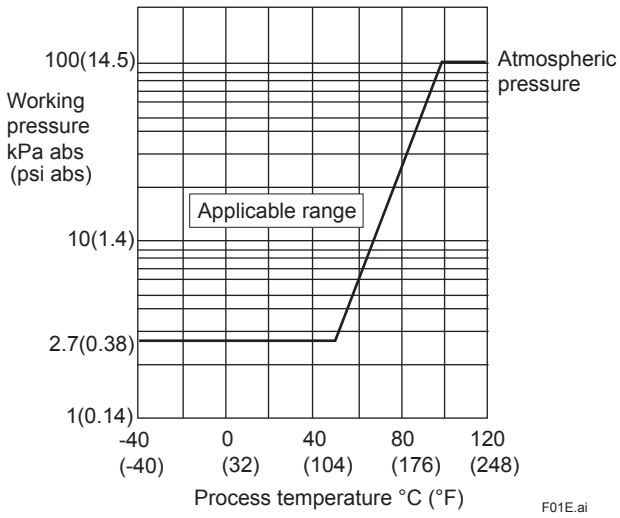


**Figure 1. Working Pressure and Process Temperature**

**Supply & Load Requirements**
**(Output signal code D and J. Optional features or approval codes may affect electrical requirements.)**
With 24 V DC supply, up to a 550Ω load can be used. See graph below.

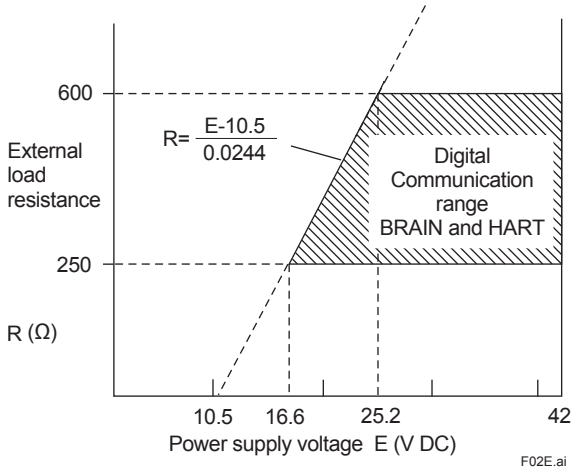


**Figure 2. Relationship Between Power Supply Voltage and External Load Resistance (Output signal code D and J)**

All Rights Reserved. Copyright © 2012, Yokogawa Electric Corporation

**Supply Voltage "◊"**

**For 4 to 20 mA HART / BRAIN (Output signal code D and J)**

10.5 to 42 V DC for general use and flameproof type.
10.5 to 32 V DC for lightning protector (option code /A.)
10.5 to 30 V DC for intrinsically safe, type n, or non-incendive.
Minimum voltage limited at 16.6 V DC for digital communications, BRAIN and HART

**For 1 to 5 V HART (Output signal code Q)**

Power supply :
9 to 28 V DC for general use and flame proof type.
Power Consumption :
0.96 mA to 3 mA, 27 mW

**Load for 4 to 20 mA HART / BRAIN (Output signal code D and J)**

0 to 1290Ω for operation
250 to 600Ω for digital communication

**Output Load for 1 to 5 V HART (Output signal code Q)**

1 MΩ or greater (meter input impedance)
Note that with three-wire connection, the cable length may affect the measurement accuracy of the output signal.

**Communication Requirements "◊"**

(Approval codes may affect electrical requirements.)

**BRAIN**

**Communication Distance**

Up to 2 km (1.25 miles) when using CEV polyethylene-insulated PVC-sheathed cables.
Communication distance varies depending on type of cable used.

**Load Capacitance**

0.22 μF or less

**Load inductance**

3.3 mH or less

**Input impedance of communicating device**

10 kΩ or more at 2.4 kHz.

**EMC Conformity Standards**

EN 61326-1 Class A, Table2
EN 61326-2-3
EN 61326-2-5 (for fieldbus)

**European Pressure Equipment Directive 2014/68/EU**

Sound Engineering Practice

With option code /PE3

Category III, Module H, Type of Equipment: Pressure Accessory-Vessel, Type of Fluid: Liquid and Gas, Group of Fluid: 1 and 2

**EU RoHS Directive**

EN IEC 63000

**Safety Requirement Standards**

EN 61010-1, C22.2 No.61010-1

- Installation category: I (Anticipated transient overvoltage 330 V)
- Pollution degree: 2
- Indoor/Outdoor use

## □ PHYSICAL SPECIFICATIONS

**Wetted Parts Materials**

**Diaphragm, cover flange, process connector, capsule gasket, and vent/drain plug**

Refer to "MODEL AND SUFFIX CODES."

**Process connector O-ring**

Fluorinated rubber

**Non-wetted Parts Materials**

**Bolting**

B7 carbon steel, 316L SST or 660 SST

**Housing**

- Low copper cast aluminum alloy
- Low copper cast aluminum alloy with corrosion resistance properties (copper content ≤ 0.03%, iron content ≤ 0.15%) (optional)
- ASTM CF-8M Stainless steel (optional)

**Coating of housing**

[for aluminum housing]
Polyester resin powder coating
Mint-green paint (Munsell 5.6BG 3.3/2.9 or its equivalent)
[for option code /P□ or /X2]
Epoxy and polyurethane resin solvent coating

**Degrees of protection**

IP66/IP67, Type 4X

**Cover O-rings**

Buna-N, fluoro-rubber (optional)

**Name plate and tag**

316 SST

**Fill fluid**

Silicone, fluorinated oil (optional)

**Weight**

[Installation code 7, 8 and 9]
6.8 kg (14.3 lb) without integral indicator, mounting bracket, and process connector.
Add 1.5 kg (3.3 lb) for amplifier housing code 2.

**Connections**

Refer to "MODEL AND SUFFIX CODES."
Process Connection of Cover Flange: IEC61518

**< Related Instruments>**

FieldMate Versatile Device Management Wizard: Refer to GS 01R01A01-01E.
BRAIN TERMINAL: Refer to GS 01C00A11-00E
Power Distributor: Refer to GS 01B04T01-02E or GS 01B04T02-02E

**< Reference >**

- DPharp EJA ; Registered trademark of Yokogawa Electric Corporation.
- FieldMate; Registered trademark of Yokogawa Electric Corporation.
- Teflon; Trademark of E.I. DuPont de Nemours & Co.
- Hastelloy; Trademark of Haynes International Inc.
- HART®: Registered trademark of FieldComm Group.
- FOUNDATION Fieldbus; Trademark of FieldComm Group.
- PROFIBUS; Registered trademark of Profibus Nutzerorganisation e.v., Karlsruhe, Germany.

Other company names and product names used in this material are registered trademarks or trademarks of their respective owners.

All Rights Reserved. Copyright © 2012, Yokogawa Electric Corporation

## ■ MODEL AND SUFFIX CODES

| Model | Suffix Codes | Description |
|---|---|---|
| **EJA130E** | ..... | Differential pressure transmitter |
| Output signal | **-D** .....<br>**-J** .....<br>**-F** .....<br>**-G** .....<br>**-Q** ..... | 4 to 20 mA DC with digital communication (BRAIN protocol)<br>4 to 20 mA DC with digital communication (HART 5/HART 7 protocol)*1<br>Digital communication (FOUNDATION Fieldbus protocol, refer to GS 01C31T02-01EN)<br>Digital communication (PROFIBUS PA protocol, refer to GS 01C31T04-01EN)<br>Low Power, 1 to 5 V DC with digital communication (HART 7 protocol) |
| Measurement span (capsule) | **M** .....<br>**H**..... | 1 to 100 kPa (4 to 400 inH$_2$O)<br>5 to 500 kPa (20 to 2000 inH$_2$O) |
| Wetted parts material *2 | **S**..... | Refer to "Wetted Parts Material" Table below. |
| Process connections | **3** .....<br>**4** .....<br>▶ **5** ..... | with 1/4 NPT female process connector*3<br>with 1/2 NPT female process connector*3<br>without process connector (1/4 NPT female on the cover flanges) |
| Bolts and nuts material | **J** .....<br>**G**.....<br>**C**..... | B7 carbon steel<br>316L SST<br>660 SST |
| Installation | **-7** .....<br>**-8** .....<br>▶ **-9** .....<br>**-U** ..... | Vertical piping, left side high pressure, and process connection downside<br>Horizontal piping and right side high pressure<br>Horizontal piping and left side high pressure<br>Universal flange |
| Amplifier housing | **1** .....<br>**3** .....<br>**2** ..... | Cast aluminum alloy<br>Cast aluminum alloy with corrosion resistance properties*4<br>ASTM CF-8M stainless steel*5 |
| Electrical connection | **0** .....<br>▶ **2** .....<br>**4** .....<br>**5** .....<br>**7** .....<br>**9** .....<br>**A**.....<br>**C**.....<br>**D**..... | G1/2 female, one electrical connection without blind plugs<br>1/2 NPT female, two electrical connections without blind plugs<br>M20 female, two electrical connections without blind plugs<br>G1/2 female, two electrical connections and a blind plug*6<br>1/2 NPT female, two electrical connections and a blind plug*6<br>M20 female, two electrical connections and a blind plug*6<br>G1/2 female, two electrical connections and a SUS316 blind plug<br>1/2 NPT female, two electrical connections and a SUS316 blind plug<br>M20 female, two electrical connections and a SUS316 blind plug |
| Integral indicator | **D**.....<br>**E**.....<br>▶ **N**..... | Digital indicator*7<br>Digital indicator with the range setting switch (push button)*8<br>None |
| Mounting bracket | ▶ **B**.....<br>**D**.....<br>**J**.....<br>**K**.....<br>**N**..... | 304 SST 2-inch pipe mounting, flat type (for horizontal piping)<br>304 SST or SCS13A 2-inch pipe mounting, L type (for vertical piping)<br>316 SST 2-inch pipe mounting, flat type (for horizontal piping)<br>316 SST or SCS14A 2-inch pipe mounting, L type (for vertical piping)<br>None |
| Optional Codes | | ☐/ Optional specification |

The "▶" marks indicate the most typical selection for each specification.
*1: HART 5 or HART 7 is selectable. Specify upon ordering.
*2: ⚠ Users must consider the characteristics of selected wetted parts material and influence of process fluids. Specifying inappropriate materials has the potential to cause serious damage to human body and plant facilities resulted from an unexpected leak of the corrosive process fluids.
*3: Lower limit of ambient and process temperature is -15°C.
*4: Not applicable for electrical connection code 0, 5, 7, 9 and A.
*5: Not applicable for electrical connection code 0, 5, 7 and 9.
*6: Material of a blind plug; aluminum alloy for code 5 and 9, and SUS304 for code 7.
*7: Not applicable for output signal code G.
*8: Not applicable for output signal code F.

**Table. Wetted Parts Materials**

| Wetted parts material code | Cover flange | Process connector | Capsule | Capsule gasket | Vent/Drain plug |
|---|---|---|---|---|---|
| **S #** | F316 SST *3 | ASTM CF-8M *1*3 | Hastelloy C-276 *2 (Diaphragm)<br>F316L SST, 316L SST (Others) | Teflon-coated 316L SST | 316 SST |

*1: Cast version of 316 SST. Equivalent to SCS14A.
*2: Hastelloy C-276 or ASTM N10276.
*3: Intergranular corrosion test passed according to ASTM A262 Practice E.
The '#'marks indicate the construction materials conform to NACE material recommendations per MR0175/ISO15156.
Please refer to the latest standards for details. Selected materials also conform to NACE MR0103.

All Rights Reserved. Copyright © 2012, Yokogawa Electric Corporation

## ■ OPTIONAL SPECIFICATIONS (For Explosion Protected type) "◊"

For other agency approvals and marine approvals, please refer to GS 01C25A20-01EN.

Please select appropriate equipment in accordance with the laws and regulations of the relevant country/region, when it is used in a location where explosive atmospheres may be present.

| Item | Description | Code |
|---|---|---|
| Factory Mutual (FM) | FM Explosionproof Approval *1<br>Applicable Standard: FM3600, FM3615, FM3810, NEMA 250, ANSI/UL 61010-1, ANSI/UL 61010-2-30<br>Explosionproof for Class I, Division 1, Groups B, C and D, Dust-ignitionproof for Class II/III, Division 1, Groups E, F and G, in Hazardous locations, indoors and outdoors (Enclosure: Type 4X)<br>"FACTORY SEALED, CONDUIT SEAL NOT REQUIRED."<br>Temperature class: T6, Amb. Temp.: –40 to 60°C (–40 to 140°F) | **FF1** |
| | FM Intrinsically safe Approval *1*3<br>Applicable Standard: FM 3600, FM 3610, FM 3611, FM 3810, ANSI/ISA-60079-0, ANSI/ISA-60079-11, ANSI/ISA-61010-1, NEMA 250<br>Intrinsically Safe for Class I, Division 1, Groups A, B, C & D, Class II, Division 1, Groups E, F & G and Class III, Division 1, Class I, Zone 0, in Hazardous Locations, AEx ia IIC<br>Nonincendive for Class I, Division 2, Groups A, B, C & D, Class II, Division. 2, Groups F & G, Class I, Zone 2, Group IIC, in Hazardous Locations<br>Enclosure: Type 4X, Temp. Class: T4, Amb. Temp.: –60 to 60°C (–75 to 140°F)<br>Intrinsically Safe Apparatus Parameters<br>[Groups A, B, C, D, E, F and G] Vmax=30 V, Imax=200 mA, Pmax=1 W, Ci=6 nF, Li=0 μH<br>[Groups C, D, E, F and G] Vmax=30 V, Imax=225 mA, Pmax=1 W, Ci=6 nF, Li=0 μH | **FS1** |
| | Combined FF1 and FS1 *1*3 | **FU1** |
| ATEX | ATEX Flameproof Approval *1<br>Applicable Standard: EN IEC 60079-0, EN 60079-1, EN 60079-31<br>Certificate: KEMA 07ATEX0109 X<br>II 2 G Ex db IIC T6...T4 Gb, II 2 D Ex tb IIIC T85°C Db<br>Degree of protection: IP66/IP67<br>Amb. Temp. (Tamb) for gas-proof :<br>T4; –50 to 75°C (–58 to 167°F), T5; –50 to 80°C (–58 to 176°F), T6; –50 to 75°C (–58 to 167°F)<br>Process Temp. for gas-proof (Tp):<br>T4; –50 to 120°C (–58 to 248°F), T5; –50 to 100°C (–58 to 212°F), T6; –50 to 85°C (–58 to 185°F)<br>Max. surface Temp. for dust-proof: T85°C (Tamb: –30 to 75°C, Tp: –30 to 85°C) *2 | **KF22** |
| | ATEX Intrinsically safe Approval *1*3<br>Applicable Standard: EN IEC 60079-0, EN 60079-11<br>Certificate: DEKRA 11ATEX0228 X<br>II 1 G Ex ia IIC T4 Ga, II 2 D Ex ia IIIC T85°C T100°C T120°C Db<br>Degree of protection: IP66/IP67<br>Amb. Temp. (Tamb) for EPL Ga: –50 to 60°C (–58 to 140°F)<br>Maximum Process Temp. (Tp) for EPL Ga:120°C<br>Electrical data: Ui=30 V, Ii=200 mA, Pi=0.9 W, Ci=27.6 nF, Li=0 μH<br>Amb. Temp. for EPL Db: –30 to 60°C *2<br>Max. surface Temp. for EPL Db: T85°C (Tp: 80°C), T100°C (Tp: 100°C), T120°C (Tp: 120°C) | **KS21** |
| | Multiple types of protection (KF22, KS21 or Intrinsically safe Ex ic) *1*3<br>Applicable Standard: EN IEC 60079-0, EN 60079-11<br>II 3 G Ex ic IIC T4 Gc, Amb. Temp.: –30 to 60°C (–22 to 140°F) *2<br>Ui=30 V, Ci=27.6 nF, Li=0 μH | **KU22** |

All Rights Reserved. Copyright © 2012, Yokogawa Electric Corporation

| Item | Description | Code |
|---|---|---|
| Canadian Standards Association (CSA) | CSA Explosionproof Approval *1<br>Certificate: 2014354<br>Applicable Standard: C22.2 No. 25, C22.2 No. 30, CAN/CSA-C22.2 No. 94, CAN/CSA-C22.2 No. 61010-1, CAN/CSA-C22.2 No. 61010-2-030, CAN/CSA-C22.2 No. 60079-0, CAN/CSA-C22.2 No. 60079-1, CAN/CSA-C22.2 No. 60529<br>Explosion-proof for Class I, Groups B, C and D.<br>Dustignition-proof for Class II/III, Groups E, F and G.<br>When installed in Division 2, “SEAL NOT REQUIRED” Enclosure: Type 4X,<br>Temp. Code: T6...T4<br>Ex d IIC T6...T4 Enclosure: IP66/IP67<br>Max.Process Temp.: T4;120°C(248°F), T5;100°C(212°F), T6; 85°C(185°F)<br>Amb.Temp.: –50 to 75°C(–58 to 167°F) for T4, –50 to 80°C(–58 to 176°F) for T5, –50 to 75°C(–58 to 167°F) for T6 *2<br>Process Sealing Certification<br>Dual Seal Certified by CSA to the requirement of ANSI/ISA-12.27.01<br>No additional sealing required<br>Primary seal failure annunciation: at the zero adjustment screw | **CF1** |
| | CSA Intrinsically safe Approval *1*3<br>Certificate: 1606623<br>[For Division System]<br>Applicable Standard: C22.2 No.0, C22.2 No.94, C22.2 No.157, C22.2 No.213, C22.2 No.61010-1, C22.2 No.61010-2-030<br>Intrinsically Safe for Class I, Division 1, Groups A, B, C & D, Class II, Division 1, Groups E, F & G, Class III, Division 1, Nonincendive for Class I, Division 2, Groups A, B, C & D, Class II, Division 2, Groups F & G, Class III, Division 1<br>Enclosure: Type 4X, Temp. Code: T4 Amb. Temp.: –50 to 60°C(–58 to 140°F) *2<br>Electrical Parameters: [Intrinsically Safe] Vmax=30V, Imax=200mA, Pmax=0.9W, Ci=10nF, Li=0 μH<br>[Nonincendive] Vmax=30V, Ci=10nF, Li=0 μH<br>[For Zone System]<br>Applicable Standard: CAN/CSA-C22.2 60079-0, CAN/CSA-E60079-11, CAN/CSA-E60079-15, CAN/CSA-C22.2 No.60529<br>Ex ia IIC T4, Ex nL IIC T4 Enclosure: IP66/IP67<br>Amb. Temp.: –50 to 60°C(–58 to 140°F) *2, Max. Process Temp.: 120°C(248°F)<br>Electrical Parameters: [Ex ia] Ui=30V, Ii=200mA, Pi=0.9W, Ci=10nF, Li=0 μH<br>[Ex nL] Ui=30V, Ci=10nF, Li=0 μH<br>Process Sealing Certification<br>Dual Seal Certified by CSA to the requirement of ANSI/ISA-12.27.01<br>No additional sealing required<br>Primary seal failure annunciation: at the zero adjustment screw | **CS1** |
| | Combined CF1 and CS1 *1*3 | **CU1** |
| IECEx | IECEx Flameproof Approval *1<br>Applicable Standard: IEC 60079-0, IEC60079-1<br>Certificate: IECEx CSA 07.0008<br>Flameproof for Zone 1, Ex d IIC T6...T4 Gb Enclosure: IP66/IP67<br>Max.Process Temp.: T4;120°C(248°F), T5;100°C(212°F), T6; 85°C(185°F)<br>Amb.Temp.: –50 to 75°C(–58 to 167°F) for T4, –50 to 80°C(–58 to 176°F) for T5, –50 to 75°C(–58 to 167°F) for T6 | **SF2** |
| | IECEx Intrinsically safe and Flameproof Approval *1*3<br>Intrinsically safe Ex ia<br>Certificate: IECEx DEK 11.0081X<br>Applicable Standard: IEC 60079-0, IEC 60079-11<br>Ex ia IIC T4 Ga Enclosure: IP66/IP67<br>Amb. Temp.: –50 to 60 °C(–58 to 140 °F), Max. Process Temp.: 120 °C(248 °F)<br>Electrical Parameters: Ui=30 V, Ii=200 mA, Pi=0.9 W, Ci=27.6 nF, Li=0 μH<br>Intrinsically safe Ex ic<br>Certificate: IECEx DEK 13.0061X<br>Applicable Standard: IEC 60079-0, IEC 60079-11<br>Ex ic IIC T4 Gc IP code: IP66<br>Amb. Temp.: –30 to 60°C(–22 to 140°F) *2, Max. Process Temp.: 120°C(248°F)<br>Electrical Parameters: Ui=30V,Ci=27.6 nF, Li=0 μH<br>Flameproof<br>Certificate: IECEx CSA 07.0008<br>Applicable Standard: IEC 60079-0, IEC60079-1<br>Flameproof for Zone 1, Ex d IIC T6...T4 Gb Enclosure: IP66/IP67<br>Max.Process Temp.: T4;120°C(248°F), T5;100°C(212°F), T6; 85°C(185°F)<br>Amb.Temp.: –50 to 75°C(–58 to 167°F) for T4, –50 to 80°C(–58 to 176°F) for T5, –50 to 75°C(–58 to 167°F) for T6 | **SU21** |

All Rights Reserved. Copyright © 2012, Yokogawa Electric Corporation

| Item | Description | Code |
|---|---|---|
| IECEx | IECEx Flameproof Approval *1<br>Applicable Standard: IEC 60079-0, IEC 60079-1, IEC 60079-31<br>Certificate: IECEx DEK 14.0046X<br>Enclosure: IP66/IP67<br>Ex db IIC T6...T4 Gb, Ex tb IIIC T85°C Db<br>Amb. Temp. (Tamb) for gas-proof :<br>T4; –50 to 75°C (–58 to 167°F), T5; –50 to 80°C (–58 to 176°F), T6; –50 to 75°C (–58 to 167°F)<br>Process Temp. for gas-proof (Tp):<br>T4; –50 to 120°C (–58 to 248°F), T5; –50 to 100°C (–58 to 212°F),<br>T6; –50 to 85°C (–58 to 185°F)<br>Max. surface Temp. for dust-proof: T85°C (Tamb: –30 to 75°C, Tp: –30 to 85°C) *2 | **SF22** |
| | IECEx Intrinsically safe and SF22 *1*3<br>Intrinsically safe Ex ia<br>Certificate: IECEx DEK 11.0081X<br>Applicable Standard: IEC 60079-0, IEC 60079-11<br>Ex ia IIC T4 Ga Enclosure: IP66/IP67<br>Amb. Temp.: –50 to 60°C (–58 to 140°F), Max. Process Temp.: 120°C (248°F)<br>Electrical Parameters: Ui=30V, Ii=200mA, Pi=0.9W, Ci=27.6nF, Li=0 μH<br>Intrinsically safe Ex ic<br>Certificate: IECEx DEK 13.0061X<br>Applicable Standard: IEC 60079-0, IEC 60079-11<br>Ex ic IIC T4 Gc IP code: IP66<br>Amb. Temp.: –30 to 60°C (–22 to 140°F) *2, Max. Process Temp.: 120°C (248°F)<br>Electrical Parameters: Ui=30V,Ci=27.6 nF, Li=0 μH<br>Flameproof<br>Refer to SF22 | **SU22** |

*1: Applicable for Electrical connection code 2, 4, 7, 9, C and D.
*2: Lower limit of ambient temperature is –15°C (5°F) when /HE is specified.
*3: Not applicable for output signal code Q.

All Rights Reserved. Copyright © 2012, Yokogawa Electric Corporation

## ■ OPTIONAL SPECIFICATIONS

| Item | | Description | | Code |
|---|---|---|---|---|
| Painting | Color change | Amplifier cover only*2 | | P□ |
| | | Amplifier cover and terminal cover, Munsell 7.5 R4/14 | | PR |
| | Coating change | Anti-corrosion coating*1 | | X2 |
| 316 SST exterior parts | | 316 SST zero-adjustment screw and setscrews*3 | | HC |
| Fluoro-rubber O-ring | | All O-rings of amplifier housing. Lower limit of ambient temperature: –15°C (5°F) | | HE |
| Lightning protector | | Transmitter power supply voltage: 10.5 to 32 V DC (10.5 to 30 V DC for intrinsically safe type.)<br>Allowable current: Max. 6000 A (1×40 μs), Repeating 1000 A (1×40 μs) 100 times<br>Applicable Standards: IEC 61000-4-4, IEC 61000-4-5 | | A |
| Oil-prohibited use*4 | | Degrease cleansing treatment | | K1 |
| | | Degrease cleansing treatment with fluorinated oilfilled capsule.<br>Operating temperature −20 to 80°C (−4 to 176°F) | | K2 |
| Oil-prohibited use with dehydrating treatment*4 | | Degrease cleansing and dehydrating treatment | | K5 |
| | | Degrease cleansing and dehydrating treatment with fluorinated oilfilled capsule.<br>Operating temperature −20 to 80°C ( −4 to 176°F) | | K6 |
| Capsule fill fluid | | Fluorinated oil filled in capsule<br>Operating temperature −20 to 80°C (−4 to 176°F) | | K3 |
| Calibration units*5 | | P calibration (psi unit) | (See Table for Span and Range Limits.) | D1 |
| | | bar calibration (bar unit) | | D3 |
| | | M calibration (kgf/cm$^2$ unit) | | D4 |
| Plug option*20*21 | | Long vent*6: Total length: 119 mm (standard: 34 mm); Total length when combining with option code K1, K2, K5, and K6: 130 mm. Material: 316 SST | | U1 |
| | | Without vent and drain plugs | | UN |
| Gold-plated capsule gasket *7 | | Gold-plated 316L SST capsule gasket. Without drain and vent plugs. | | GS |
| Gold-plated diaphragm *18 | | Surface of isolating diaphragms are gold plated, effective for hydrogen permeation. | Gold plate thickness: 3 μm | A1 |
| | | | Gold plate thickness: 10 μm | A2 |
| Output limits and failure operation*8 | | Failure alarm down-scale : Output status at CPU failure and hardware error is −5%, 3.2mA DC or less for 4 to 20 mA output type, and −5%, 0.8V DC or less for 1 to 5 V output type. | | C1 |
| | | NAMUR NE43 Compliant<br>Output signal limits:<br>3.8 mA to 20.5 mA *17 | Failure alarm down-scale: Output status at CPU failure and hardware error is −5%, 3.2 mA DC or less. | C2 |
| | | | Failure alarm up-scale: Output status at CPU failure and hardware error is 110%, 21.6 mA or more. | C3 |
| Body option*9<br> 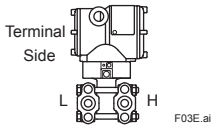 <br> | | Right side high pressure, without drain and vent plugs | | N1 |
| | | N1 and Process connection, based on IEC61518 with female thread on both sides of cover flange, with blind kidney flanges on back. | | N2 |
| | | N2, and Material certificate for cover flange, diaphragm, capsule body, and blind kidney flange | | N3 |
| Wired tag plate | | 316 SST tag plate wired onto transmitter (Tag No.: Maximum. 16 characters.) | | N4 |
| Data configuration at factory*10 | | Data configuration for HART communication type | Software damping, Descriptor, Message | CA |
| | | Data configuration for BRAIN communication type | Software damping | CB |
| European Pressure Equipment Directive*11 | | PED 2014/68/EU<br>Category: III, Module: H, Type of Equipment: Pressure Accessory-Vessel,<br>Type of Fluid: Liquid and Gas, Group of Fluid: 1 and 2 | | PE3 |
| Material certificate*12 | | Cover flange *13 | | M01 |
| | | Cover flange, Process connector *14 | | M11 |
| | | Cover flange, Diaphragm, Capsule body*13*25 | | MA1 |
| | | Cover flange, Process connector, Diaphragm, Capsule body*14*22 | | MC1 |
| | | Cover flange, Bolt and Nut for cover flange, Diaphragm, Capsule body, Vent and Drain plug, Vent screw, Capsule gasket*13*19*21 | | MG1 |
| | | Cover flange, Process connector, Bolt and nut for cover flange, Bolt for process connector, Diaphragm, Capsule body, Vent and Drain plug, Vent screw, Capsule gasket*14*19*21 | | MH1 |
| Pressure test/<br>Leak test certificate*15 | | Test Pressure: 32 MPa(4500 psi) | Nitrogen Gas or Water*16<br>Retention time: one minute | T09 |
| Parameter list*23 | | List of setting and adjustment parameters | | YP |
| Functional safety(SIL)*24 | | Low temperature expansion of functional safety Amb.Temp.: −55 to 85°C | | SLT |

All Rights Reserved. Copyright © 2012, Yokogawa Electric Corporation

*1: Not applicable with color change option. Not applicable for amplifier housing code 2.
*2: Not applicable for amplifier housing code 2 and 3.
*3: The specification is included in amplifier code 2.
*4: Applicable for Wetted parts material code S.
*5: The unit of MWP (Max. working pressure) on the name plate of a housing is the same unit as specified by option codes D1, D3, and D4.
*6: Applicable for vertical impulse piping type (Installation code 7) and Wetted parts material code S.
*7: Applicable for wetted parts material code S; process connection code 5; and installation code 8 and 9. Not applicable for option code U1, N2, N3 and M11. No PTFE is used for wetted parts.
*8: Applicable for output signal codes D and J. The hardware error indicates faulty amplifier or capsule.
*9: Applicable for wetted parts material code S; process connection codes 3, 4, and 5; installation code 9; and mounting bracket code N. Process connection faces on the other side of zero adjustment screw.
*10: Also see 'Ordering Information'.
*11: If compliance with category III is needed, specify this option code.
*12: Material traceability certification, per EN 10204 3.1B.
*13: Applicable for process connections codes 5.
*14: Applicable for process connections codes 3 and 4.
*15: The unit on the certificate is always Pa unit regardless of selection of option code D1, D3 or D4.
*16: Dry nitrogen gas or pure water is used for oil-prohibited use (option codes K1, K2, K5, and K6).
*17: The 1 to 5 V voltage output corresponding to 4 to 20 mA current output is applied to output signal code Q which is non-compliant to NAMUR NE43.
*18: /A2 is not applicable with FM approval.
*19: Not applicable with plug option code UN.
*20: Not applicable for installation code -U.
*21: Not applicable with option code N1, N2, N3 and GS.
*22: Applicable for option code UN and N1.
*23: Applicable for output signal code D and J.
*24: Not applicable for output signal code F, G, and Q.
*25: Applicable for option code UN, N1 and GS.

All Rights Reserved. Copyright © 2012, Yokogawa Electric Corporation

## ■ DIMENSIONS

Unit: mm (approx.inch)

### ● Vertical Impulse Piping Type

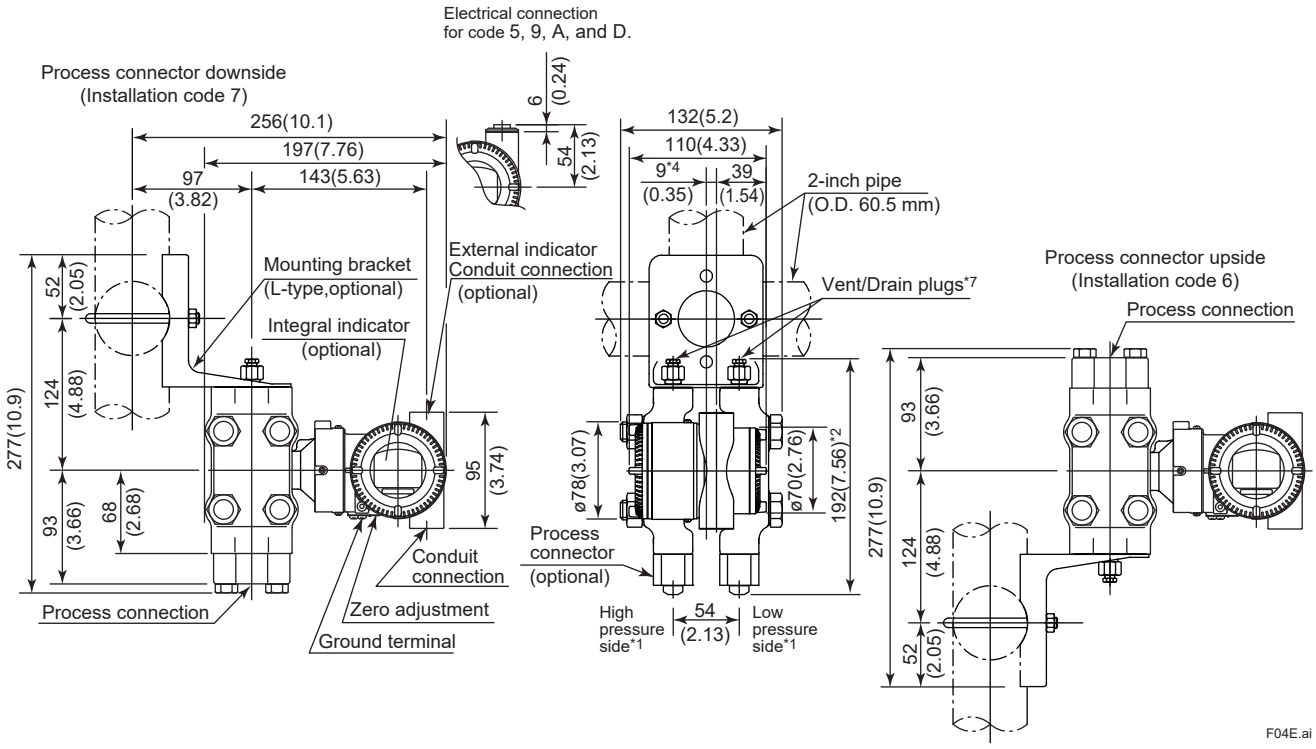


### ● Horizontal Impulse Piping Type (Installation code 9)

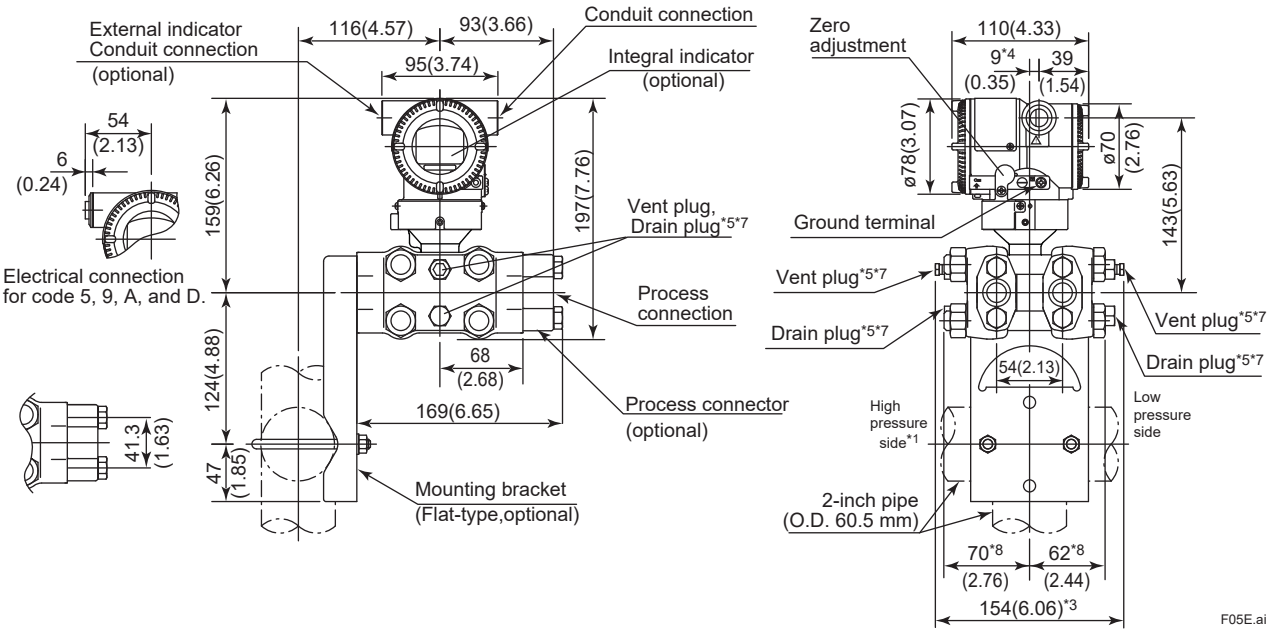


*1: When Installation code 2, 3, or 8 is selected, high and low pressure side on the above figure are reversed. (i.e. High pressure side is on the right side.)
*2: When Option code K1, K2, K5, or K6 is selected, add 15 mm (0.59 inch) to the value in the figure.
*3: When Option code K1, K2, K5, or K6 is selected, add 30 mm (1.18 inch) to the value in the figure.
*4: 15 mm(0.59 inch) for right side high pressure.
*5: Not available when Option code GS is specified.
*6: When electrical connection code 7 or C is selected, a blind plug is protruded up to 8 mm (0.31 inch) from the conduit connection.
*7: When option code UN is specified, Vent/Drain holes and plugs are not applicable.
*8: Those two values are swapped for right side high pressure.

All Rights Reserved. Copyright © 2012, Yokogawa Electric Corporation

Unit: mm (approx.inch)

## ● Universal Flange (INSTALLATION CODE 'U')

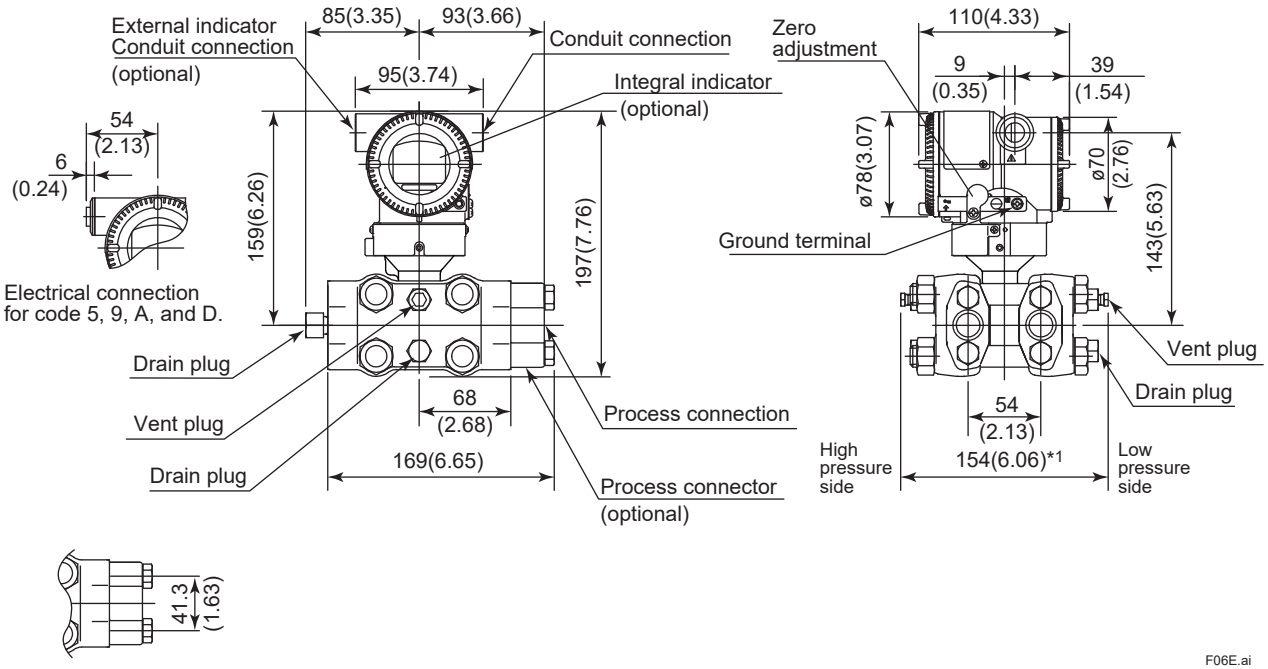


*1: When Option code K1, K2, K5, or K6 is selected, add 30 mm (1.18 inch) to the value.
*2: When electrical connection code 7 or C is selected, a blind plug is protruded up to 8 mm (0.31 inch) from the conduit connection.

## ● Terminal Configuration

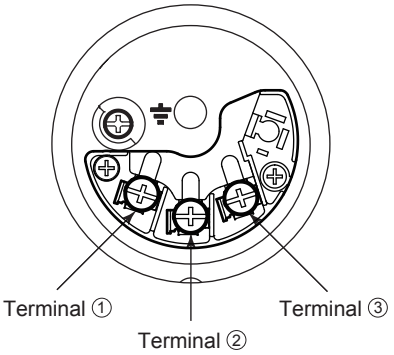


## ● Terminal Wiring for 4 to 20 mA output, FOUNDATION Fieldbus and PROFIBUS PA communication types

| | | |
|---|---|---|
| SUPPLY | + ① – ② | Power supply and output terminals |
| CHECK | + ③ – ② | External indicator (ammeter) terminals*1*2 |
| | ⏚ | Ground terminal |

*1: When using an external indicator or check meter, the internal resistance must be 10 Ω or less.
*2: Not available for FOUNDATION Fieldbus and PROFIBUS PA communication types.

## ● Terminal Wiring for 1 to 5 V output

| | | |
|---|---|---|
| SUPPLY | + ① – ② | Power supply terminals |
| VOUT | + ③ – ② | 1 to 5 V DC with HART communication terminals |
| | ⏚ | Ground terminal |

Three or four wire connection. For four wire connection, both supply and signal lines use SUPPLY - terminal.

F07E.ai

All Rights Reserved. Copyright © 2012, Yokogawa Electric Corporation

**< Ordering Information > "◊"**

Specify the following when ordering

1. Model, suffix codes, and option codes
2. Calibration range and units
   1) Calibration range can be specified with range value specifications up to 5 digits (excluding any decimal point) for low or high range limits within the range of -32000 to 32000. When reverse range is designated, specify Lower Range Value(LRV) as greater than Upper Range Value(URV). When square root output mode is specified, LRV must be "0 (zero) ".
   2) Specify only one unit from the table, 'Factory setting.'
3. Select linear or square root for output mode and display mode.
   Note: If not specified, the instrument is shipped set for linear mode.
4. Display scale and units (for transmitters equipped with the integral indicator only)
   Specify either 0 to 100 % or 'Range and Unit' for engineering units scale:
   Scale range can be specified with range limit specifications up to 5 digits (excluding any decimal point) for low or high range limits within the range of -32000 to 32000. Unit display consists of 6-digit, therefore, if the specified scaling unit excluding '/' is longer than 6-characters , the first 6 characters will be displayed on the unit display.
5. HART PROTOCOL
   When output signal code is "J", specify the HART protocol revision "5" or "7".
6. TAG NO (if required)
   Specified characters (up to 16 characters for BRAIN, 22 characters for HART, or 16 characters for /N4 tag) are engraved on the stainless steel tag plate fixed on the housing.
7. SOFTWARE TAG (for HART only. if required)
   Specified characters (up to 32 characters) are set as "Tag" (the first 8 characters) and "Long tag"*1 (32 characters) in the amplifier memory. Use alphanumeric capital letters.
   When the "SOFTWARE TAG" is not specified, specified "TAG NO" is set as "Tag" (the first 8 characters) and "Long tag"*1 (22 characters) in the amplifier memory.
   *1: applicable only when HART 7 is selected.
8. Other factory configurations (if required)
   Specifying option code **CA** or **CB** will allow further configuration at factory. Following are configurable items and setting range.
   [/CA : For HART communication type]
   1) Descriptor (up to 16 characters)
   2) Message (up to 30 characters)
   3) Software damping in second (0.00 to 100.00)
   [/CB : For BRAIN communication type]
   1) Software damping in second (0.00 to 100.00)

**< Factory Setting > "◊"**

| | |
|---|---|
| Tag number | As specified in order |
| Software damping *1 | '2.00 s' or as specified in order |
| Output mode | 'Linear' unless otherwise specified in order |
| Calibration range lower range value | As specified in order |
| Calibration range upper range value | As specified in order |
| Calibration range unit | Selected from $mmH_2O$, $mmH_2O$(68°F), mmAq*2, mmWG*2, mmHg, Pa, hPa*2, kPa, MPa, mbar, bar, $gf/cm^2$, $kgf/cm^2$, $inH_2O$, $inH_2O$(68°F), inHg, $ftH_2O$, $ftH_2O$(68°F) or psi. (Only one unit can be specified.) |
| Display setting | Designated differential pressure value specified in order. (% or user scaled value.) Display mode 'Linear' or 'Square root' is also as specified in order. |
| Static pressure display range | '0 to 32 MPa' for M and H capsule, absolute value. Measuring high pressure side. |

*1: To specify these items at factory, option code **CA** or **CB** is required.
*2: Not available for HART protocol type.

**< Material Cross Reference >**

| ASTM | JIS |
|---|---|
| 316 | SUS316 |
| F316 | SUSF316 |
| 316L | SUS316L |
| F316L | SUSF316L |
| 304 | SUS304 |
| F304 | SUSF304 |
| 660 | SUH660 |
| B7 | SNB7 |
| CF-8M | SCS14A |

**<Information on EU WEEE Directive>**

EU WEEE (Waste Electrical and Electronic Equipment) Directive is only valid in the EU.

This instrument is intended to be sold and used only as a part of equipment which is excluded from WEEE Directive, such as large-scale stationary industrial tools, a large-scale fixed installation and so on, and, therefore, subjected to the exclusion from the scope of the WEEE Directive. The instrument should be disposed of in accordance with local and national legislation/regulations.

All Rights Reserved. Copyright © 2012, Yokogawa Electric Corporation
Subject to change without notice.