SIEMENS

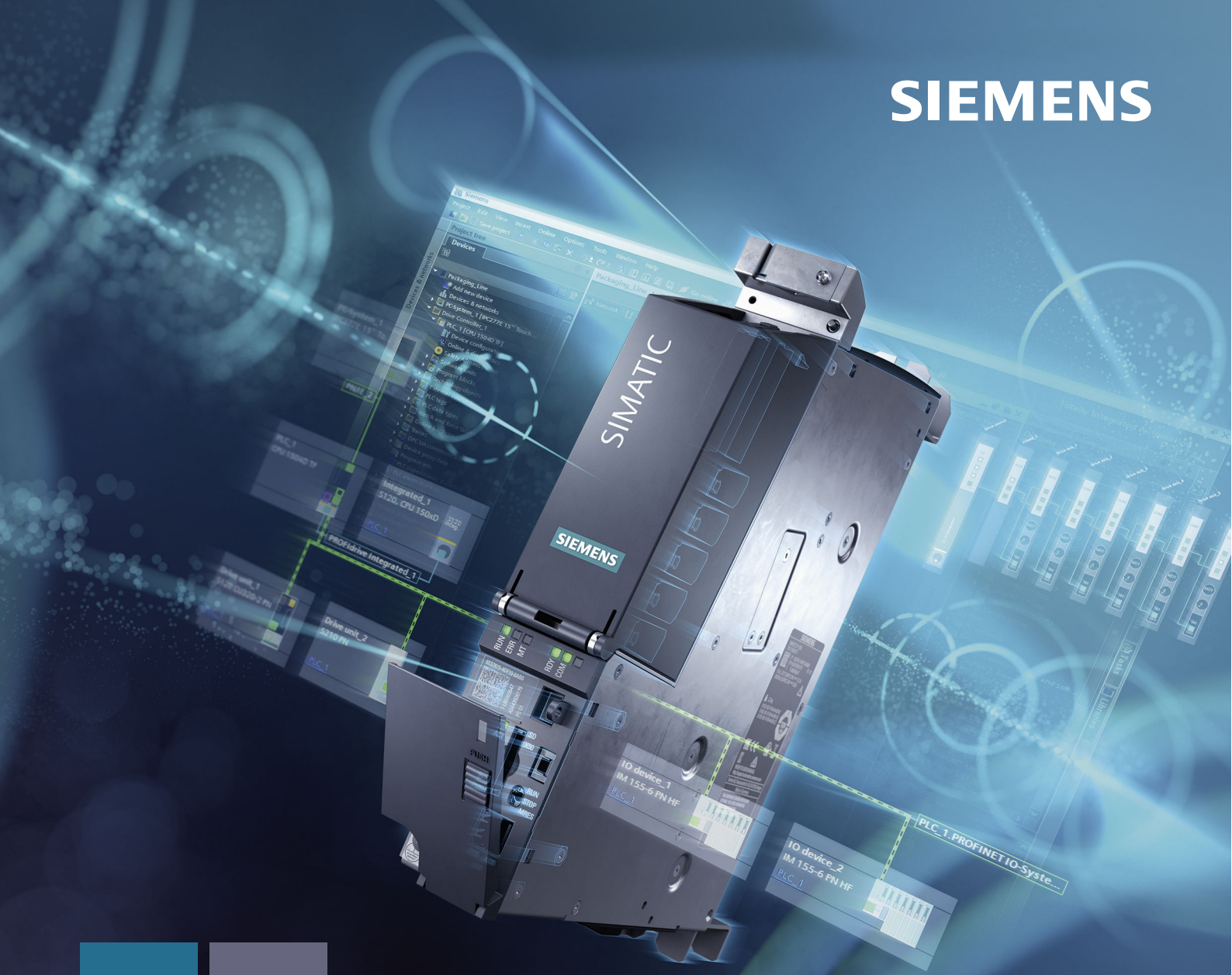

Edition 11/2023

EQUIPMENT MANUAL

SIMATIC

S7-1500

SIMATIC Drive Controller

support.industry.siemens.com

SIEMENS

SIMATIC

SIMATIC Drive Controller

Equipment Manual

Introduction 1

Industrial cybersecurity 2

Product overview 3

Connecting 4

Interrupts, diagnostics alarms, error messages and system alarms 5

Technical specifications 6

Dimension drawing A

11/2023

A5E46600370-AD

Legal information

Warning notice system

This manual contains notices you have to observe in order to ensure your personal safety, as well as to prevent damage to property. The notices referring to your personal safety are highlighted in the manual by a safety alert symbol, notices referring only to property damage have no safety alert symbol. These notices shown below are graded according to the degree of danger.

⚠ DANGER
indicates that death or severe personal injury **will** result if proper precautions are not taken.

⚠ WARNING
indicates that death or severe personal injury **may** result if proper precautions are not taken.

⚠ CAUTION
indicates that minor personal injury can result if proper precautions are not taken.

NOTICE
indicates that property damage can result if proper precautions are not taken.

If more than one degree of danger is present, the warning notice representing the highest degree of danger will be used. A notice warning of injury to persons with a safety alert symbol may also include a warning relating to property damage.

Qualified Personnel

The product/system described in this documentation may be operated only by **personnel qualified** for the specific task in accordance with the relevant documentation, in particular its warning notices and safety instructions. Qualified personnel are those who, based on their training and experience, are capable of identifying risks and avoiding potential hazards when working with these products/systems.

Proper use of Siemens products

Note the following:

⚠ WARNING
Siemens products may only be used for the applications described in the catalog and in the relevant technical documentation. If products and components from other manufacturers are used, these must be recommended or approved by Siemens. Proper transport, storage, installation, assembly, commissioning, operation and maintenance are required to ensure that the products operate safely and without any problems. The permissible ambient conditions must be complied with. The information in the relevant documentation must be observed.

Trademarks

All names identified by ® are registered trademarks of Siemens AG. The remaining trademarks in this publication may be trademarks whose use by third parties for their own purposes could violate the rights of the owner.

Disclaimer of Liability

We have reviewed the contents of this publication to ensure consistency with the hardware and software described. Since variance cannot be precluded entirely, we cannot guarantee full consistency. However, the information in this publication is reviewed regularly and any necessary corrections are included in subsequent editions.

Siemens AG
Digital Industries
Postfach 48 48
90026 NÜRNBERG
GERMANY

A5E46600370-AD
Ⓟ 10/2023 Subject to change

Copyright © Siemens AG 2019 - 2023.
All rights reserved

Table of contents

1 Introduction 6

1.1 SIMATIC Drive Controller documentation guide 8
1.1.1 Information classes SIMATIC Drive Controller 8
1.1.2 SIMATIC Technical Documentation 10

2 Industrial cybersecurity 13

2.1 Cybersecurity information 13

2.2 Cybersecurity-relevant information 14

3 Product overview 16

3.1 New functions 16

3.2 Application range 19
3.2.1 SIMATIC Drive Controller 19

3.3 Components and functionality 23

3.4 Hardware properties 26

3.6 Firmware functions of SINAMICS Integrated 33

3.7 Operator controls, displays and connection elements 36
3.7.1 View of SIMATIC Drive Controller with covers 36
3.7.2 View of SIMATIC Drive Controller without covers 37
3.7.3 Top view of SIMATIC Drive Controller 38
3.7.4 View of the SIMATIC Drive Controller from below 39
3.7.5 Covers 39
3.7.6 Nameplates 42

3.8 Mode selector 46

3.9 FUNCT button 47

4 Connecting 48

4.1 Supply voltage X124 48

4.2 PROFINET X150, X160 and X130 50

4.3 PROFIBUS X126 52

4.4 Digital inputs and outputs of X122, X132 and X142 54

4.5 DRIVE-CLiQ interfaces X100 to X103 58

4.6 Wiring and block diagrams 59
4.6.1 SIMATIC Drive Controller block diagram 59
4.6.2 Onboard digital inputs/digital outputs of X122, X132 and X142 60
4.6.3 DRIVE-CLiQ interfaces X100 to X103 61

5 Interrupts, diagnostics alarms, error messages and system alarms 63

5.1 Status and error displays 63
5.1.1 Overview 63
5.1.2 Status and error display of the CPU 64
5.1.3 Status and error display of SINAMICS Integrated 65
5.1.4 ACT LED and interface LEDs 67
5.1.5 7-segment display 68

5.2 Interrupts, diagnostics and system messages 70
5.2.1 Interrupts, diagnostics and system messages 70

6 Technical specifications 71

A Dimension drawing 90

Introduction 1

Purpose of the documentation

This equipment manual supplements the system manual of the SIMATIC Drive Controller family of controllers. It contains a concise description of the SIMATIC Drive Controller hardware and, in addition to the product overview, includes information on:

- Interfaces
- Wiring diagrams
- Display and operator controls
- Technical specifications

In the SIMATIC Drive Controller system manual, you will find information on configuring, installing, wiring and commissioning the SIMATIC Drive Controller, among other things.

All cross-system functions, such as motion control and communication functions, are described in the function manuals.

The information provided in this manual and the system manual enables you to commission the SIMATIC Drive Controller.

Conventions

STEP 7: In this documentation, "STEP 7" is used as a synonym for all versions of the configuration and programming software "STEP 7 (TIA Portal)".

Also take note of information labeled as follows:

NOTE

A note contains important information on the product described in the documentation, on the handling of the product or on the section of the documentation to which particular attention should be paid.

Special information

NOTE

Important note for maintaining the operational safety of your plant

Plants with safety-related features are subject to special operational safety requirements on the part of the operator. The supplier is also obliged to comply with special product monitoring measures. For this reason, we inform you in personal notifications about product developments and features that are (or could be) relevant to the operation of plants from a safety perspective.

By subscribing to the corresponding notifications, you will ensure that you are always up-to-date and able to make changes to your system when necessary.

Log onto Industry Online Support. Follow the links below, and right-click on "email on update":

SIMATIC S7-1500/SIMATIC S7-1500F (https://support.industry.siemens.com/cs/ww/en/ps/13716)

Distributed I/O (https://support.industry.siemens.com/cs/ww/en/ps/14029)

STEP 7 (TIA Portal) (https://support.industry.siemens.com/cs/ww/en/ps/14667)

SINAMICS S120 (https://support.industry.siemens.com/cs/ww/en/ps/13231)

SINAMICS Startdrive (https://support.industry.siemens.com/cs/ww/en/ps/13438)

Operator control and monitoring systems (https://support.industry.siemens.com/cs/ww/en/ps/14729)

Industrial communication (https://support.industry.siemens.com/cs/ww/en/ps/15247)

Safety systems – Safety Integrated (https://support.industry.siemens.com/cs/ww/en/ps/19902)

NOTE

When using F-CPUs in safety mode and fail-safe modules, note the description of the fail-safe system in the Programming and Operating Manual SIMATIC Safety - Configuring and Programming (https://support.industry.siemens.com/cs/ww/en/view/54110126).

Recycling and disposal

For environmentally friendly recycling and disposal of your old equipment, contact a certified electronic waste disposal company and dispose of the equipment according to the applicable regulations in your country.

Industry Mall

The Industry Mall is the catalog and order system of Siemens AG for automation and drive solutions on the basis of Totally Integrated Automation (TIA) and Totally Integrated Power (TIP).

You can find catalogs for all automation and drive products on the Internet (https://mall.industry.siemens.com).

Open-source software

Open-source software is used in the firmware of the SIMATIC Drive Controllers. The Open Source Software is provided free of charge. Siemens AG is liable for the product described, including the Open Source Software contained in it, pursuant to the conditions applicable to the product. Any and all liability is excluded:

- for use of the Open Source Software beyond the program sequence intended for the product by Siemens
- for defects caused by changes to the software

For legal reasons, Siemens AG is obliged to publish the original text of the license conditions and copyright notices. You can find it on the Internet in the FW downloads (https://support.industry.siemens.com/cs/de/en/view/109773914) and in the scope of supply of the SIMATIC Drive Controller for the firmware version that has been supplied (see the note on the type plate at the side).
In the case of SIMATIC Drive Controllers with HW function level FS 11 or higher, this information can be found on the device in readable form.
Instructions on how to read the information can be obtained from the lower, large QR code on the side of the SIMATIC Drive Controller and in the "Reading Open Source Software Information" section of the SIMATIC Drive Controller system manual (https://support.industry.siemens.com/cs/ww/en/view/109766665).

NOTE

Management of the license conditions and copyright notices of firmware updates

The license conditions and copyright notices in the scope of delivery can change as a result of firmware updates. In order to avoid license violations by the reseller and the buyer, if there are firmware updates, you must pass on the license conditions and copyright notices of the firmware update to the buyer (for example, by saving them to the SIMATIC Memory Card).

1.1 SIMATIC Drive Controller documentation guide

1.1.1 Information classes SIMATIC Drive Controller

The documentation for the SIMATIC Drive Controller is divided into three areas.
This arrangement enables you to access the specific content you require.
You can download the documentation free of charge from the Internet (https://support.industry.siemens.com/cs/ww/en/view/109742691).

Basic information

The System Manual describes in detail the configuration, installation, wiring and commissioning of the SIMATIC Drive Controllers.
The STEP 7 online help supports you in the configuration and programming.
Examples:

- SIMATIC Drive Controller System Manual
- Online help TIA Portal

Device information

Equipment manuals contain a compact description of the module-specific information, such as properties, wiring diagrams, characteristics and technical specifications.
Examples:

- SIMATIC Drive Controller CPU 1504D TF
- SIMATIC Drive Controller CPU 1507D TF

General information

The function manuals contain detailed descriptions on general topics relating to the SIMATIC Drive Controller and the S7-1500 automation system.
Examples:

- Function Manual Diagnostics
- Function Manual Communication
- Function Manual Motion Control
- Function Manual Web Server
- Function Manual Cycle and Response Times
- PROFINET Function Manual
- PROFIBUS Function Manual

Product Information on the SIMATIC Drive Controller

The Product Information contains changes and supplements to the SIMATIC Drive Controllers documentation. The Product Information takes precedence over the device and system manuals. You can find the latest Product Information on the SIMATIC Drive Controller on the Internet (https://support.industry.siemens.com/cs/ww/en/view/109772684).

Manual Collection S7-1500/ET 200MP

The Manual Collection contains the complete documentation on the SIMATIC S7-1500 automation system and the SIMATIC Drive Controller distributed I/O system ET 200MP gathered together in one file.
You can find the Manual Collection on the Internet.
(https://support.industry.siemens.com/cs/ww/en/view/86140384)

SIMATIC S7-1500 comparison list for programming languages

The comparison list contains an overview of which instructions and functions you can use for which controller families.
You can find the comparison list on the Internet.
(https://support.industry.siemens.com/cs/ww/en/view/86630375)

SINAMICS documentation

The SINAMICS documentation contains detailed descriptions of the SINAMICS S120 drive control and SINAMICS S210 servo drive systems.
You can find the documentation by entering the manual title in the search box on the Internet (https://support.industry.siemens.com/cs/ww/en/ps/13229/man).
The SINAMICS Technical Documentation (https://support.industry.siemens.com/cs/ww/en/view/108993276) web page provides information on the following topics:

- Documentation overview
- Additional links for downloading documents
- Using documentation online (find and browse manual/information)

1.1.2 SIMATIC Technical Documentation

Additional SIMATIC documents will complete your information. You can find these documents and their use at the following links and QR codes.
The Industry Online Support gives you the option to get information on all topics. Application examples support you in solving your automation tasks.

Overview of the SIMATIC Technical Documentation

Here you will find an overview of the SIMATIC documentation available in Siemens Industry Online Support:

Industry Online Support International (https://support.industry.siemens.com/cs/ww/en/view/109742705)

Watch this short video to find out where you can find the overview directly in Siemens Industry Online Support and how to use Siemens Industry Online Support on your mobile device:

Quick introduction to the technical documentation of automation products per video (https://support.industry.siemens.com/cs/us/en/view/109780491)

YouTube video: Siemens Automation Products - Technical Documentation at a Glance (https://youtu.be/TwLSxxRQQsA)

Retention of the documentation

Retain the documentation for later use.
For documentation provided in digital form:

1. Download the associated documentation after receiving your product and before initial installation/commissioning. Use the following download options:
   - Industry Online Support International: (https://support.industry.siemens.com)
     The article number is used to assign the documentation to the product. The article number is specified on the product and on the packaging label. Products with new, non-compatible functions are provided with a new article number and documentation.
   - ID link:
     Your product may have an ID link. The ID link is a QR code with a frame and a black frame corner at the bottom right. The ID link takes you to the digital nameplate of your product. Scan the QR code on the product or on the packaging label with a smartphone camera, barcode scanner, or reader app. Call up the ID link.
2. Retain this version of the documentation.

Updating the documentation

The documentation of the product is updated in digital form. In particular in the case of function extensions, the new performance features are provided in an updated version.

1. Download the current version as described above via the Industry Online Support or the ID link.
2. Also retain this version of the documentation.

mySupport

With "mySupport" you can get the most out of your Industry Online Support.

Registration	You must register once to use the full functionality of "mySupport". After registration, you can create filters, favorites and tabs in your personal workspace.
Support requests	Your data is already filled out in support requests, and you can get an overview of your current requests at any time.
Documentation	In the Documentation area you can build your personal library.
Favorites	You can use the "Add to mySupport favorites" to flag especially interesting or frequently needed content. Under "Favorites", you will find a list of your flagged entries.
Recently viewed articles	The most recently viewed pages in mySupport are available under "Recently viewed articles".
CAx data	The CAx data area gives you access to the latest product data for your CAx or CAe system. You configure your own download package with a few clicks: • Product images, 2D dimension drawings, 3D models, internal circuit diagrams, EPLAN macro files • Manuals, characteristics, operating manuals, certificates • Product master data

You can find "mySupport" on the Internet. (https://support.industry.siemens.com/My/ww/en)

Application examples

The application examples support you with various tools and examples for solving your automation tasks. Solutions are shown in interplay with multiple components in the system - separated from the focus on individual products.
You can find the application examples on the Internet.
(https://support.industry.siemens.com/cs/ww/en/ps/ae)

Industrial cybersecurity 2

Due to the digitalization and increasing networking of machines and industrial plants, the risk of cyber attacks is also growing. Appropriate protective measures are therefore mandatory, particularly in the case of critical infrastructure facilities.

Refer to the SIMATIC Drive Controller System Manual (https://support.industry.siemens.com/cs/ww/en/view/109766665) for general information and measures regarding industrial cybersecurity.

This section provides an overview of security-related information pertaining to your SIEMENS device.

NOTE

Security-relevant changes to software or devices are documented in the section New functions (Page 16).

2.1 Cybersecurity information

Siemens provides products and solutions with industrial cybersecurity functions that support the secure operation of plants, systems, machines, and networks.

In order to protect plants, systems, machines, and networks against cyber threats, it is necessary to implement – and continuously maintain – a holistic, state-of-the-art industrial cybersecurity concept. Siemens' products and solutions constitute one element of such a concept.

Customers are responsible for preventing unauthorized access to their plants, systems, machines and networks. Such systems, machines and components should only be connected to an enterprise network or the internet if and to the extent such a connection is necessary and only when appropriate security measures (e.g. firewalls and/or network segmentation) are in place.

For more information on protective industrial cybersecurity measures for implementation, please visit (https://www.siemens.com/global/en/products/automation/topic-areas/industrial-cybersecurity.html).

Siemens' products and solutions undergo continuous development to make them more secure. Siemens strongly recommends that product updates are applied as soon as they are available and that the latest product versions are used. Use of product versions that are no longer supported, and failure to apply the latest updates may increase customers' exposure to cyber threats.

To stay informed about product updates at all times, subscribe to the Siemens Industrial Cybersecurity RSS Feed under (https://new.siemens.com/global/en/products/services/cert.html).

2.2 Cybersecurity-relevant information

Observe all cybersecurity-relevant information.

Topics with cybersecurity-relevant information	Reference
Operational environment and security assumptions	
Requirements for the operational application environment of the system and security assumptions	You can find this section in the SIMATIC Drive Controller System Manual (https://support.industry.siemens.com/cs/ww/en/view/109766665).
Area of application	You can find the section Application range (Page 19) in this equipment manual.
Security properties of the product	
Access protection Physical protection: • You can protect the CPU from unauthorized access by locking the cover. You can also protect the CPU with a password. Password categories • Password to protect confidential configuration data • Passwords in the context of user management (UMAC)	You can find information on implementing access control by locking the CPU and using password protection in the SIMATIC Drive Controller System Manual (https://support.industry.siemens.com/cs/ww/en/view/109766665), sections: • Requirements for the operational environment and security assumptions • Protection
Integrated protection functions • The CPUs have integrated protection functions.	You can find information on the protection functions in the SIMATIC Drive Controller System Manual (https://support.industry.siemens.com/cs/ww/en/view/109766665), section Overview of the protection functions.
PROFINET Security Class 1 • The CPU supports PROFINET Security Class 1. • With the introduction of PROFINET Security Class 1, additional security settings have been integrated into the PROFINET communication.	You can find detailed information on PROFINET Security Class 1 and the additional security settings in the PROFINET with STEP 7 Function Manual (https://support.industry.siemens.com/cs/ww/en/view/49948856).
Reading out and verifying signatures	You can find detailed information on reading and verifying signatures in the STEP 7 online help (TIA Portal).
Supported Ethernet services	You can find information on supported services in the section Technical specifications (Page 71). You can find detailed information on supported Ethernet services in the Communication Function Manual (https://support.industry.siemens.com/cs/ww/en/view/59192925).
Interfaces, ports, protocols and services	
Information on the following is relevant for security: • Communication layer and communication role • Default states • Enabling/disabling of ports and services	You can find detailed information on these topics in the Communication Function Manual (https://support.industry.siemens.com/cs/ww/en/view/59192925).
Secure operation	
Corrective measures for known risks	Corrective measures for known risks are announced on the Siemens ProductCERT web page (https://siemens.com/productcert). You can find more information on Siemens ProductCERT in the SIMATIC Drive Controller System Manual (https://support.industry.siemens.

Topics with cybersecurity-relevant information	Reference
	com/cs/ww/en/view/109766665), section Notifications of vulnerabilities (SIEMENS Security Advisories)
Security checks	You can find application-related security measures such as cyclic checking of the configuration using a checksum in the SIMATIC Drive Controller System Manual (https://support.industry.siemens.com/cs/ww/en/view/109766665), section Security checks.
Collecting of security events	Information on the collecting of security events can be found in the SIMATIC Drive Controller System Manual (https://support.industry.siemens.com/cs/ww/en/view/109766665), section Collecting of security events.
Secure operation of SINAMICS Integrated with the important security-relevant topics: • Write and know-how protection • Using the memory card • Backing up and restoring data • Communication services and used port numbers	You can find information on secure operation of SINAMICS Integrated in the SIMATIC Drive Controller System Manual (https://support.industry.siemens.com/cs/ww/en/view/109766665), section Secure operation of SINAMICS Integrated.
Secure decommissioning Products that contain security-relevant data must be securely decommissioned before disposal or resale.	You can find information on secure decommissioning of the SIMATIC Drive Controller in the SIMATIC Drive Controller System Manual (https://support.industry.siemens.com/cs/ww/en/view/109766665), section Secure decommissioning.

Product overview 3

3.1 New functions

New functions of the SIMATIC Drive Controller in the firmware version V3.1

The following table provides an overview of the important new functions of the SIMATIC Drive Controller with CPU firmware V3.1 and SINAMICS Integrated firmware V5.2 SP3.

New functions	Applications	Customer benefits
Integrated safety		
Syslog messages	The CPU stores syslog messages in a local cache (temporary storage). The messages can be forwarded to a syslog server.	The syslog server saves all syslog messages from its connected devices. The messages can be displayed on the interface of the server and possible security risks can be identified.
Local user management	As of TIA Portal version V19 and FW version V3.1, the CPUs feature improved management of users, roles and CPU function rights (User Management & Access Control, UMAC). As of the above-named version, you manage all project users along with their rights (e.g. access rights) for all CPUs in the project. You do this in the editor for users and roles in the TIA Portal.	Project users can be managed via the TIA Portal with their rights (for example, access rights) for all CPUs in the project in the editor for users and roles.
Communication of the CPU		
Implementation of PROFINET Security Class 1	As of V19, STEP 7 offers extended configuration options for the SNMP and DCP protocols in order to meet the requirements for PROFINET Security Class 1.	Additional protection of communication within your PROFINET network.
Project-internal shared device/shared I-device	As of STEP 7 V19, you can create a shared device/shared I-device together with a maximum of two IO controllers in a project. Previously, the second IO controller required a separate project.	Simple configuration
Maintain PROFINET IO communication (AR) during data record communication when network loads are high	When network loads are high, timeouts may occur in PROFINET IO devices during data record communication. Previously, the PROFINET IO communication was reduced by the CPU in this case. As of STEP 7 V19 and FW version V3.1, you can configure the behavior of the respective PROFINET interface.	PROFINET IO communication is maintained even when the network load is high.
Web server of the CPU		
New Web API methods	Many new API methods expand your access options to the CPU via the Web API.	Additional applications for the Web server
Technology functions of the CPU		

New functions	Applications	Customer benefits
Axis functions	Measuring gearbox for positioning axis/synchronous axis	Extended configuration options
	Torque precontrol for positioning/synchronous axis: The torque precontrol of the CPU controls the required torque for acceleration of the axis while taking the motion profile into account.	Complex motion sequences can be executed more quickly and precisely; this leads to reduction of the following error in acceleration phases
	Three stop modes of the drive can be configured for the alarm response "Remove enable".	You have the option to select between a deceleration ramp, coasting down and quick stop.
	Dynamic filter with moving average	The new mode "Moving average filter" is available for the dynamic filter.
	Standstill signal on external encoder	The standstill signal is also available for external encoders. The standstill signal is output when the encoder values are within the defined standstill window.
	Virtual axis	The axis is operated in virtual mode with improved runtime behavior. The new mode replaces the existing behavior of the virtual axis.
Measuring input functions	Listening measuring inputs	Using the measuring input type "Measuring via monitoring", the measuring input can capture the measured signal of another configured measuring input.
	Cyclic measuring for central measuring input	Cyclic measuring possible without additional technology module
Interpreter functions	The following technology objects are provided with the SIMATIC Motion Interpreter: • Interpreter • Interpreter program • Interpreter mapping Motion Control Language (MCL) is supported.	• Sequential programming of technology and motion tasks takes place separately and independently of the cyclic user program of the CPU • Integrated extensions for technological tasks, e.g. path-synchronous actions • Simple and fast programming through configuration dialogs
Synchronous operation functions	Cyclic readout of the following value in camming	Extended range of functions
Kinematics functions	Improved blending behavior during conveyor tracking	Blending is possible in further motion phases.
Trace functionality of the CPU	With live monitoring for the long-term trace you can: • Display and analyze values directly in the chart during recording • Use superimposed measurements for the long-term trace • Synchronize time bases	Improved display and analysis of long-term traces

New functions	Applications	Customer benefits
Trace functionality of the CPU	With the long-term project trace, you record signals of different CPUs S7-1500 at the same time. The CPUs must be configured in a network. The recording is stored on a drive that you have configured.	Extended range of functions
SIMATIC Drive Controller		
Digital nameplate (introduced earlier with HW function version FS 11)	Nameplates with QR code and ID Link	• Simplified access to product data, manuals, declarations of conformity, certificates and other helpful information about your product. • Environmentally sustainable solution by eliminating product inserts (e.g. CD and product information in paper form)
Open source software information (introduced earlier with HW functional state FS 11)	You can read out open source software information from the CPU using a memory card	• Environmentally sustainable solution by eliminating product inserts (e.g. CD and product information in paper form)
SINAMICS licenses for SINAMICS Integrated	The following SINAMICS functions are supported in addition for SINAMICS Integrated: • SINAMICS Technology Extension POLYGON (Polygonal Line) • SINAMICS Technology Extension SETPGEN (Setpoint Generator) Additional technology extensions are under development	Extended areas of application: • Setpoint specification or adaptation (e.g. speed, torque) via a user-defined polygon function • Signal generator with predefined waveforms (sine, square, sawtooth)
New SINAMICS Integrated firmware	A new hotfix based on V5.2 SP3 is available for the SINAMICS Integrated.	Optimizations and extended module spectrum (for example, SINAMICS S220 Motor Modules)

3.2 Application range

3.2.1 SIMATIC Drive Controller

Overview

The SIMATIC Drive Controller is a drive-based controller in the SIMATIC S7-1500 range.

A SIMATIC Drive Controller combines the following functionalities in a SINAMICS S120 Booksize Compact enclosure:

- Fail-safe SIMATIC S7-1500 technology CPU with integrated technology I/Os
- SINAMICS S120 drive control

The two components are referred to as "CPU" and "SINAMICS Integrated" in this documentation.

The integrated SINAMICS S120 drive control is based on a CU320-2 Control Unit. It can control

- a maximum of 6 servo drives,
- a maximum of 6 drives with vector control, or
- a maximum of 12 drives with U/f control

Fail-safe technology CPUs are available in two performance classes. Safety Integrated on the CPU side and drive side allows use in fail-safe applications.

The SIMATIC Drive Controller supports PROFINET and PROFIBUS DP communication.

Properties

Important properties of the SIMATIC Drive Controller:

- Fail-safe technology CPU including drive control with safety functions integrated in the drive
- Extremely compact because the CPU is integrated in the drive system without taking up any additional space
- Central data management with one memory card for CPU and SINAMICS Integrated

Easy handling

- Less cabling and installation effort thanks to SINAMICS Integrated
- Easy configuring in the hardware configuration of STEP 7
- Central license handling in the TIA Portal
- Easy and efficient commissioning and optimization of drives using the SINAMICS Startdrive engineering tool in the TIA Portal
- Optimization function for determining the optimal precontrol and gain (Kv factor) for the closed loop position control of the axis

Optimized for production machinery

- Performance classes and memory size optimized for production machinery
- Wide range of interfaces, consistent across performance range

- Technology I/Os onboard
  - 12 digital inputs and 16 user-configurable digital inputs/outputs
  - Up to 8 outputs configurable as high-speed outputs for ultra-short output delays and maximum switching precision, e.g. can be configured for output cam applications.
  - Up to 16 inputs configurable as measurement sensing inputs for position detection
  - Additional technology functions such as oversampling and event/period duration measurement

Areas of application

SIMATIC Drive Controllers are used, for example, in applications in which the SINAMICS S120 drive family is being used because of the need for:

- A highly dynamic, flexible multi-axis drive system:
  - Broad performance range
  - Comprehensive range of motors (including external drives, etc.)
  - Comprehensive control modes (servo, vector, U/f)
  - SINAMICS Technology Extensions
- Controlled infeed/regenerative feedback
  - For prevention of undesired harmonics
  - For a high level of robustness against line fluctuations
  - For energy recovery in braking mode

SIMATIC Drive Controllers are also used where there is a need for:

- Safety solutions for machine and operator protection
- A compact, space-saving design
- High performance for motion control and high-speed I/O
- Modular machine concepts with fast isochronous mode

Typical areas of application are:

- Multi-axis machines (e.g. printing and paper machines)
- High-performance applications with short machine cycles (e.g. packaging machines and handling applications)
- Compact machines in which there is limited room for the controller and drive system (e.g. control cabinets in the machine base)
- Distributed control and drive concepts
- Synchronization of multiple SIMATIC Drive Controller s using cross-PLC synchronous operation
- Safe monitoring of motion

SIMATIC Drive Controller performance classes

The SIMATIC Drive Controller contains a failsafe CPU from the SIMATIC S7-1500 family and a SINAMICS S120 drive control. Two performance classes are available.

Table 3-1 Overview of performance classes

Performance class	SIMATIC Drive Controller	Article number
Small to mid-range applications	CPU 1504D TF	6ES7615-4DF10-0AB0
High-performance applications	CPU 1507D TF	6ES7615-7DF10-0AB0

Performance features of the CPUs

The SIMATIC Drive Controller s differ in terms of the integrated CPU. The CPUs can be used for lower and mid-range applications all the way to the high-end range of machine and plant automation. The following table shows key performance characteristics of the SIMATIC Drive Controllers.

Table 3-2 Overview of SIMATIC Drive Controller performance features

Feature	1504D TF	1507D TF
Code work memory, max.	4 MB	15 MB
Data work memory, max.	6 MB	40 MB
Retentive data area (including timers, counters, bit memories)	768 KB	768 KB
Load memory/mass storage, max.	32 GB (with SIMATIC Memory Card)	32 GB (with SIMATIC Memory Card)
I/O address area, max.	32/32 KB	32/32 KB
Integrated interfaces	1 x PROFINET IO IRT (3-port switch) 1 x PROFINET IO RT 1 x PROFINET basic services (1000 Mbps) 1 x PROFIBUS DP 2 x USB 3.0[1)] 4 x DRIVE-CLiQ	1 x PROFINET IO IRT (3-port switch) 1 x PROFINET IO RT 1 x PROFINET basic services (1000 Mbps) 1 x PROFIBUS DP 2 x USB 3.0[1)] 4 x DRIVE-CLiQ
SINAMICS Integrated	On basis of CU320-2	On basis of CU320-2
Integrated inputs and outputs (onboard I/O)	CPU: 8 DI/DQ SINAMICS Integrated: 12 DI, 8 DI/DQ	CPU: 8 DI/DQ SINAMICS Integrated: 12 DI, 8 DI/DQ
Configuration control	X	X
CPU Web server	X	X
Isochronous mode[3)]	PROFINET IO with IRT (X150) PROFIBUS DP (X126) SINAMICS Integrated Technology I/Os (X142)	PROFINET IO with IRT (X150) PROFIBUS DP (X126) SINAMICS Integrated Technology I/Os (X142)
Minimum cycle[5)]	500 µs	250 µs
Technology Integrated	CPU: • Motion control • PID control	CPU: • Motion control • PID control

Feature	1504D TF	1507D TF
	Onboard I/O: • Event/period duration measurement • Pulse width modulation (PWM) • Timer DI/DQ • Oversampling DI/DQ	Onboard I/O: • Event/period duration measurement • Pulse width modulation (PWM) • Timer DI/DQ • Oversampling DI/DQ
Number of positioning axes	Typical[2]: 12 Maximum: 40	Typical[2]: 55 Maximum: 160
Motion control resources[4]	3,200	12 800
Extended motion control resources[4]	160	420
Security Integrated	X	X
Integrated system diagnostics	X	X
Integrated safety functionality	X	X
Degree of protection	IP 20	IP 20

[1] Non-functional, no connection permitted

[2] With 4 ms servo/IPO cycle and 35% CPU load from motion control

[3] Besides the MC-Servo, only PROFINET interface X150 can also be operated isochronously with the clock system of SINAMICS Integrated and the X142 technology I/Os.
Isochronous coupling of PROFIBUS interface X126 with other clock systems is not possible. Additional drive systems must therefore be connected over the PROFINET interface (for details, see section Setting the clock system in the SIMATIC Drive Controller system manual (https://support.industry.siemens.com/cs/ww/en/view/109766665)).

[4] For information on the resources used by technology objects, see the S7-1500 Motion Control function manuals. (https://support.industry.siemens.com/cs/ww/en/view/109751049)

[5] Minimum supported cycle for PROFINET, SINAMICS Integrated, Technology I/Os (X142) and Servo/IPO. The use of clock cycles < 500 µs is only possible with CPU 1507D TF and is subject to restrictions (for details, see SIMATIC Drive Controller system manual (https://support.industry.siemens.com/cs/ww/en/view/109766665), section Configuring the clock system).

3.3 Components and functionality

Components of a SIMATIC Drive Controller system

A drive-based solution with the SIMATIC Drive Controller is made up of the following components:

- Power supply for SIMATIC Drive Controller and DRIVE-CLiQ components
- SIMATIC Drive Controller with fail-safe SIMATIC S7-1500 technology CPU and an integrated SINAMICS S120 drive control (based on CU320-2)
- SINAMICS S120 power units:
  - Line Modules
  - Motor Modules
- Sensor Modules (SMx)
- Terminal Modules (TM)
- Motors with/without DRIVE-CLiQ

NOTE

Use of SINAMICS S220 power units

From SINAMICS firmware V5.2 SP3 HF10 onwards, the use of SINAMICS S220 power units at the integrated SINAMICS S120 drive control of the SIMATIC Drive Controller is also possible. For more information on the currently available module range as well as compatibility information for use with SINAMICS S120 drive controls, see the publications on the SINAMICS S120/S220 drive system, for example (https://support.industry.siemens.com/cs/ww/en/view/109806050)

⚠ WARNING

Danger to life due to unsuitable firmware version

Operation of the SINAMICS S220 Booksize component with an unsuitable firmware version can lead to unsafe operational states, for example, overheating of converter components, unexpected acceleration of a motor or malfunctioning of the safety functions.
Use firmware V5.2 SP3 HF10 or later.

You can expand the drive configuration limits of a SIMATIC Drive Controller by connecting additional drive systems using PROFINET IO with IRT, e.g. SINAMICS S120 CU320-2 for control of multiple axes or the SINAMICS S210 single-axis servo converter system.

NOTE

The PROFIBUS interface cannot be connected to other clock systems. If you expand the drive configuration limits with distributed drive systems, those systems must be connected over the PROFINET IO interface X150. Besides the MC-Servo, only PROFINET interface X150 can also be coupled isochronously with the clock pulse system of SINAMICS Integrated and the X142 technology I/Os.

Configuration example

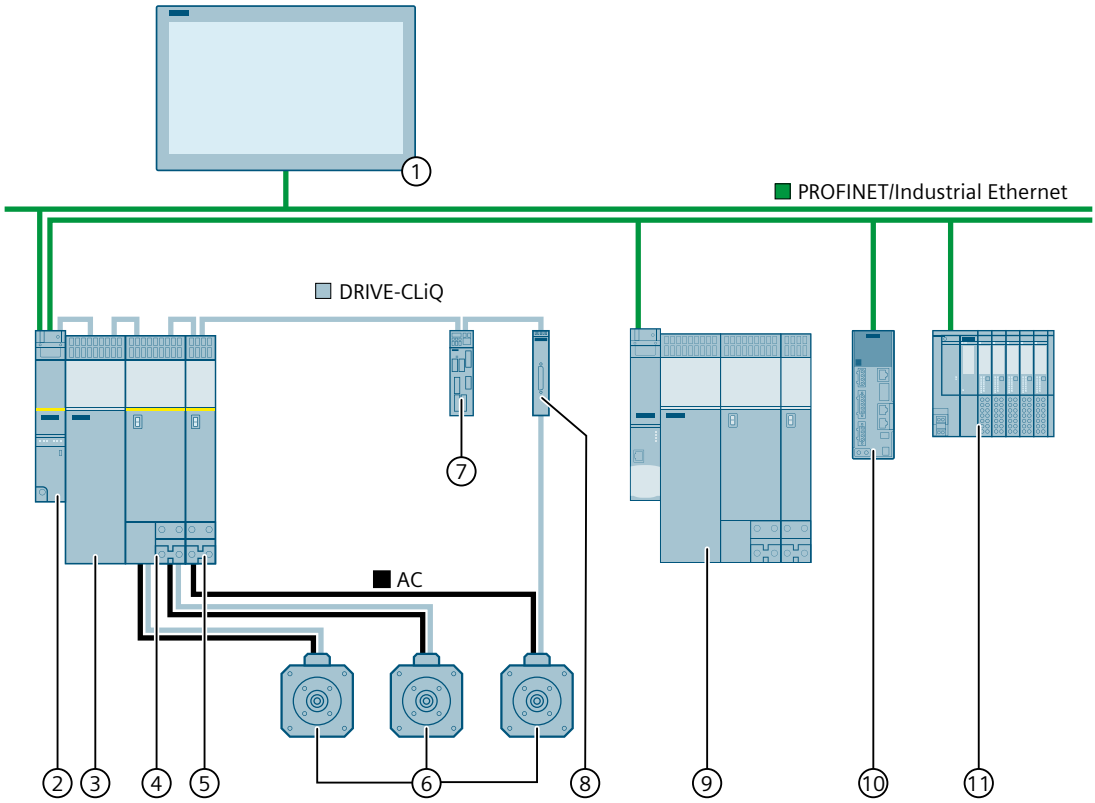

① HMI device
② SIMATIC Drive Controller
③ Line Module
④ SINAMICS S120 Double Motor Module
⑤ SINAMICS S120 Single Motor Module
⑥ SIMOTICS S servo motor
⑦ SINAMICS Terminal Module
⑧ SINAMICS Sensor Module SMC
⑨ SINAMICS S120 with CU320-2 for control of multiple axes
⑩ SINAMICS S210 single-axis servo converter system
⑪ ET 200SP I/O

Figure 3-1 Example: SIMATIC Drive Controller as a component in a system

Functionality

The SIMATIC Drive Controller combines the functionality of a SIMATIC S7-1500 TF-CPU and a SINAMICS S120 drive control based on CU320-2 in one compact device.

SIMATIC Drive Controllers are suitable for simple as well as complex motion control applications, including fail-safe applications when needed.

You can link and extend the SIMATIC Drive Controller , for example, with HMI and I/O systems using the wide range of communication interfaces. The drive control integrated in the SIMATIC Drive Controller (SINAMICS Integrated) supports the following control modes:

- Vector control
- Servo control
- U/f control

Vector control is recommended for drive solutions with continuous material webs, such as wire-drawing, film and paper machines. Servo control is suitable for clocked processes with precise yet highly dynamic position control with servo motors.

You interconnect all components of SINAMICS S120, including the motors and encoders, using DRIVE-CLiQ. You connect motors without a DRIVE-CLiQ interface, e.g. external motors or motors for retrofit applications, using Sensor Modules Cabinet-Mounted (SMC) or Sensor Modules External (SME).

Line Modules feed the power to the DC link. Optionally, Line Modules with controlled infeed/regenerative feedback ensure a constant DC-link voltage and high grid compatibility.

Motor Modules supply the motors with power from the DC link.

Terminal Modules are terminal extensions via DRIVE-CLiQ – for example, for drive-oriented digital or analog inputs/outputs.

NOTE

SINAMICS Integrated provides a functional subset of the SINAMICS S120 CU320-2 drive functions. The following functions/components are not supported by the integrated drive control of the SIMATIC Drive Controller, for example:

- Free function blocks (FBLOCKS)
- SINAMICS Web server
- Output frequencies > 550 Hz (High Output Frequency license)
- CU320-2 specific expansion modules, such as TB30

You can find additional information in the SIMATIC Drive Controller system manual (https://support.industry.siemens.com/cs/ww/en/view/109766665).

Additional information

You can find a description of the Control Units, power units and supplementary system components of SINAMICS S120 in the following manuals:

- SINAMICS S120 Control Units and Additional System Components (https://support.industry.siemens.com/cs/ww/en/view/109782370)
- SINAMICS S120 Booksize Power Units (https://support.industry.siemens.com/cs/en/en/view/109781351)
- SINAMICS S120 Booksize C/D-type Power Units (https://support.industry.siemens.com/cs/ww/en/view/109771801)
- SINAMICS S120 AC Drive (https://support.industry.siemens.com/cs/ww/en/view/109771795)

3.4 Hardware properties

Article numbers

SIMATIC Drive Controller with CPU 1504D TF: 6ES7615-4DF10-0AB0
SIMATIC Drive Controller with CPU 1507D TF: 6ES7615-7DF10-0AB0

Front and side views

The figure below shows the front view and side view of a SIMATIC Drive Controller.

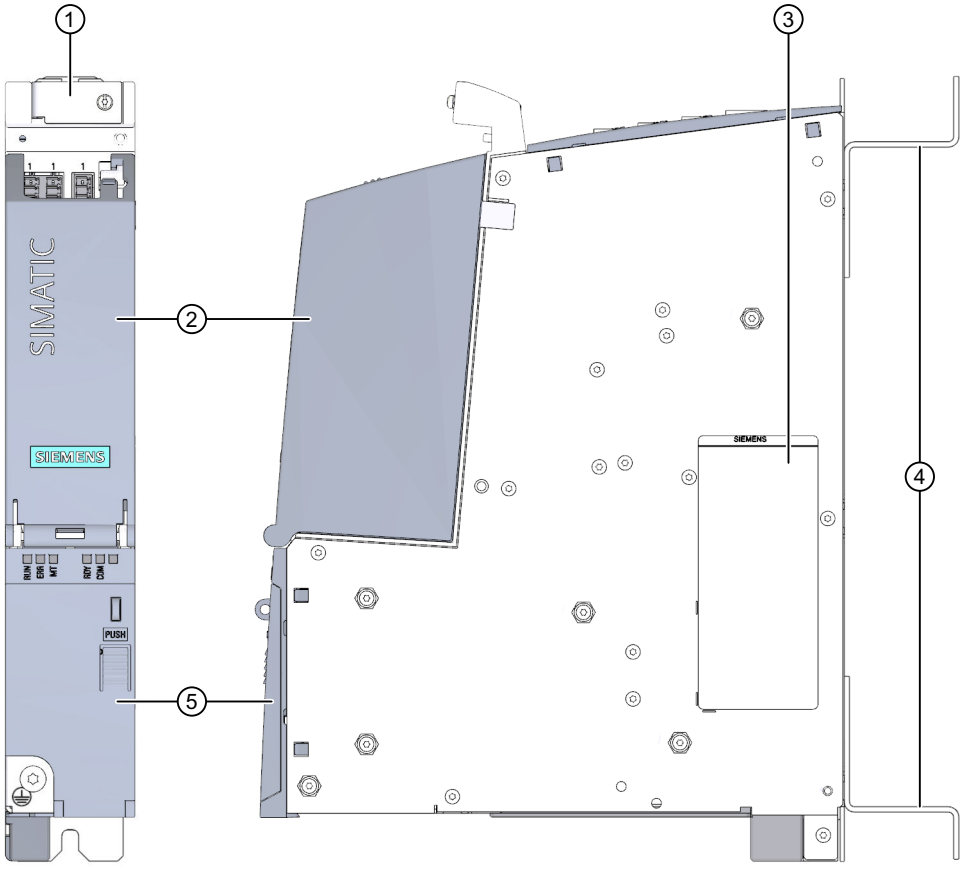

① Holding clamp of shield support
② Top cover
③ Side nameplate
④ Spacer
⑤ Bottom cover

Figure 3-2 SIMATIC Drive Controller front view and side view

Top view

The figure below shows the top view of a SIMATIC Drive Controller.

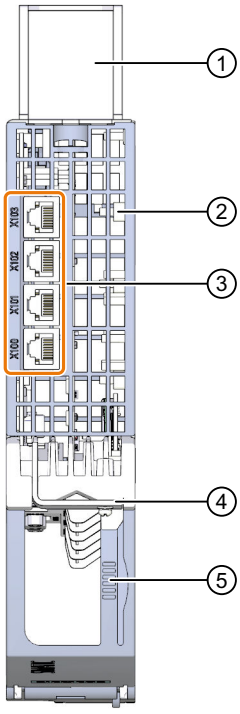

① Spacer
② Ventilation slots
③ DRIVE-CLiQ interfaces
④ Holding clamp of shield support
⑤ Release for top cover

Figure 3-3 SIMATIC Drive Controller top view

Properties

The SIMATIC Drive Controllers have the following properties:

Table 3-3 Hardware properties

Properties	Description	Additional information
Supply voltage (X124)	The 24 V DC supply voltage for the SIMATIC Drive Controller is fed via a 4-pin cable connector located on the front of the SIMATIC Drive Controller .	• Section Connecting (Page 48) • SIMATIC Drive Controller system manual (https://support.industry.siemens.com/cs/ww/en/view/109766665)
PROFINET IO		

Properties	Description	Additional information
PROFINET interface (X150 P1R, X150 P2R, X150 P3)	The interface has three ports. In addition to basic PROFINET functionality, it also supports PROFINET IO RT (Real-Time) and IRT (Isochronous Real-Time). The interface can be operated isochronously with the clock pulse system of SINAMICS Integrated and the X142 technology I/Os.	• Section Connecting (Page 48) • PROFINET function manual (https://support.industry.siemens.com/cs/ww/en/view/49948856)
PROFINET interface (X160 P1)	The interface has one port. In addition to basic PROFINET functionality, it also supports PROFINET IO RT (Real-Time).	
PROFINET interface (X130 P1)	The interface has one port. It supports basic PROFINET functionality.	
Operation of the CPU as • IO controller • I-device	• **IO controller:** As an IO controller the CPU controls the connected IO devices • **I-device:** As an I-device (intelligent IO device) the CPU is assigned to a higher-level IO controller and is thereby used as an intelligent pre-processing unit of sub-processes	
PROFIBUS DP		
PROFIBUS interface (X126)	The interface is used for connecting to a PROFIBUS network.	Section Connecting (Page 48) PROFIBUS function manual (https://support.industry.siemens.com/cs/ww/en/view/59193579)
Operation of the CPU as a DP master	As a DP master, the CPU addresses the connected DP slaves. The CPU cannot be a DP slave.	
Isochronous mode	The PROFIBUS interface can be operated isochronously. However, isochronous coupling with the clock pulse system of SINAMICS Integrated and the X142 technology I/Os is not possible.	
Additional interfaces		
USB 3.0 (X125, X135)	Non-functional, no connection permitted	-
DRIVE-CLiQ interfaces (X100 to X103)	The SIMATIC Drive Controller has four DRIVE-CLiQ interfaces. For each DRIVE-CLiQ interface, you have 24 V/450 mA available for connecting encoders and measuring systems.	Section Connecting (Page 48)
Integrated inputs and outputs		
12 DI (X122, X132)	The digital inputs are assigned to SINAMICS Integrated . You use the digital inputs, for example, for the control of Safety Integrated basic functions via a terminal. Alternatively, you assign the digital inputs to the CPU, by means of configuration with telegram 39x.	Section Connecting (Page 48)
8 DI/DQ (X122, X132)	The bidirectional digital inputs/outputs are assigned to SINAMICS Integrated . You use the digital inputs/outputs, for example, as measuring inputs via a PROFIdrive telegram. Alternatively, you assign the digital inputs/outputs to the CPU, by means of configuration with telegram 39x.	

Properties	Description	Additional information
8 DI/8 DQ (X142)	The bidirectional digital inputs/outputs are assigned to the CPU. You configure each of the digital inputs/outputs according to your task: • as a digital input or a digital output • as a timer input, e.g. for measurement sensing inputs • as a timer output, e.g. for output cam applications • as an oversampling input or an oversampling output • for event/period duration measurement • for pulse width modulation (PWM) • as a high-speed output	Section Connecting (Page 48)

Accessories/spare parts

The following accessories are included in the scope of delivery of the SIMATIC Drive Controller and can also be ordered as spare parts:

Table 3-4 Spare parts

Article	Article number
Bottom cover	6ES7615-0AC10-0AA0
Top cover	6ES7615-0AC10-1AA0
Spacer	6SL3064-1BB00-0AA0
Terminal kit • 3 x I/O connector for X122/X132/X142 • 1 x 24 V connector for X124 • 5 x DRIVE-CLiQ blanking cover	6SL3064-2CB00-0AA0

You can find additional information on accessories in the SIMATIC Drive Controller system manual (https://support.industry.siemens.com/cs/ww/en/view/109766665).

The integrated SIMATIC S7-1500 TF-CPU of the SIMATIC Drive Controller supports the following functions:

Functions

Function	Description	Additional information
Safety Integrated	The integrated F-CPU of the SIMATIC Drive Controller processes standard and safety programs on a single component. This allows fail-safe data to be evaluated in the standard user program. As a result of the integration, the system advantages and the extensive functionality of SIMATIC are also available for fail-safe applications. The F-CPU is certified for use in safety mode up to: • Safety class (Safety Integrity Level) SIL 3 according to IEC 61508:2010 • Performance Level (PL) e and Category 4 according to ISO 13849-1:2006 or according to EN ISO 13849-1:2008 An additional password protection for the F-configuration and safety program is set up for IT security.	SIMATIC Safety - Configuring and Programming programming and operating manual (https://support.industry.siemens.com/cs/ww/en/view/541101-26) Section Firmware functions of SINAMICS Integrated (Page 33)

Function	Description	Additional information
	Besides the F-CPU, SINAMICS Integrated also has integrated safety functions.	
CPU-integrated system diagnostics	The system automatically creates alarms for the system diagnostics of the CPU and outputs the alarms via a PG/PC, HMI device or Web server. System diagnostics information is also available when the CPU is in STOP mode.	Diagnostics function manual (https://support.industry.siemens.com/cs/ww/en/view/591929-26)
Integrated web server	The web server lets you access the CPU data over a network. Evaluations, diagnostics, and modifications are thus possible over long distances. Monitoring and evaluation is possible without STEP 7; all you need is a Web browser. Make sure that you take appropriate measures (e.g. limiting network access, using firewalls) to protect the CPU from being compromised.	• Web Server function manual (https://support.industry.siemens.com/cs/ww/en/view/591-93560) • Security with SIMATIC S7 Controller system manual (https://support.industry.siemens.com/cs/ww/en/view/908-85010)
Integrated trace functionality	Trace functionality supports you in troubleshooting and/or optimizing the user program. You record device tags and evaluate the recordings with the trace and logic analyzer function. Tags are, for example, drive parameters or system and user tags of a CPU. The device saves the recordings. You can read out and permanently save the recordings with the configuration system (ES), if required. The trace and logic analyzer function is therefore suitable for monitoring highly dynamic processes.	Using the Trace and Logic Analyzer Function function manual (https://support.industry.siemens.com/cs/ww/en/view/648971-28)
OPC UA	With OPC UA, you can exchange data via an open and manufacturer-neutral communication protocol. The CPU can act as an OPC UA DA server. The CPU acting as the OPC UA server can communicate with OPC UA clients. The OPC UA Companion Specification allows methods to be specified uniformly and independently of the manufacturer. Using these specified methods, you can easily integrate devices from various manufacturers into your plants and production processes.	Communication function manual (https://support.industry.siemens.com/cs/ww/en/view/591929-25)
Configuration control	You can use configuration control to operate different real hardware configurations with a configured maximum configuration of the hardware. This means especially in series machine manufacturing you have the option of operating/configuring different configuration variants of a machine with a single project.	SIMATIC Drive Controller system manual (https://support.industry.siemens.com/cs/ww/en/view/109766-665)

PROFINET IO

Function	Description	Additional information
RT (Real-Time)	RT prioritizes PROFINET IO telegrams over standard telegrams. This ensures the required determinism in the automation technology. In this process the data is transferred via prioritized Ethernet telegrams.	PROFINET function manual (https://support.industry.siemens.com/cs/ww/en/view/499488-56)
IRT (Isochronous Real-Time)	A reserved bandwidth within the send clock is available for IRT data. The reserved bandwidth ensures that the IRT data can be transmitted in time-synchronized intervals, unaffected by other high network loading (e.g. TCP/IP communication or additional real time communication). Update times with maximum determinism can be realized through IRT. Isochronous applications are possible with IRT.	
Isochronous mode	With isochronous mode, measured values and process data are acquired and processed in a fixed system clock. Isochronous mode thus contributes to high control quality and hence to greater manufacturing precision. Isochronous mode reduces possible fluctuations of the process response times to a minimum. Time-assured processing makes higher machine cycles possible. With SIMATIC Drive Controller, the clock pulse systems of SINAMICS Integrated, PROFINET (X150) and the technology I/Os (X142) can be coupled together isochronously.	
MRP (Media Redundancy Protocol)	It is possible to establish redundant networks via the Media Redundancy Protocol. Redundant transmission links (ring topology) ensure that an alternative communication path is made available if a transmission link fails. The PROFINET devices that are part of this redundant network form an MRP domain. RT operation is possible with the use of MRP.	
MRPD (Media Redundancy with Planned Duplication)	The advantage of the MRP extension MRPD is that, in the event of a failure of a device or a line in the ring, all other devices continue to be supplied with IO data without interruption and with short update times. MRPD is based on IRT and MRP. To realize media redundancy with short update times, the PROFINET devices participating in the ring send their data in both directions. The devices receive this data at both ring ports. This eliminates the reconfiguration time of the ring.	
Shared device	The "Shared device" function allows you to divide the modules or submodules of an IO device up among different IO controllers. Numerous IO controllers are often used in larger or widely distributed systems. Without the "Shared device" function, each I/O module of an IO device is assigned to the same IO controller. If sensors that are physically close to each other must provide data to different IO controllers, several IO devices are required. The "Shared device" function allows the modules or submodules of an IO device to be divided up among different IO controllers, thus allowing flexible automation concepts. You can, for example, combine I/O modules that are physically close to each other in one IO device.	
PROFIenergy	The vendor- and device-neutral profile defined by the PNO allows you to significantly reduce your energy demand and costs. With PROFIenergy you switch off unneeded loads. Thus, energy costs drop noticeably during production breaks. PROFIenergy provides an easy, automated way of switching technologically-related plant parts off and on. Most of the energy savings comes from the process. The PROFINET device itself contributes only a few watts to the savings potential.	

Integrated technology

Function	Description	Additional information
Motion control	The CPU of the SIMATIC Drive Controller supports the S7-1500 Motion Control functions via the technology objects: speed axis, positioning axis, synchronous axis, external encoder, cam, cam track and measuring input. • Speed-controlled axis for controlling a drive with speed specification • Positioning axis for position-controlled positioning of a drive • Synchronous axis for interconnecting with a leading value. The axis follows the position of the leading axis in synchronous operation. • External encoder for detecting the actual position of an encoder and its use as a leading value for synchronous operation • Cam, cam track for position-dependent generation of switching signals • Measuring input for fast, accurate and event-dependent sensing of actual positions You program the technology objects with Motion Control instructions according to PLCopen.	S7-1500(T) Motion Control function manuals (https://support.industry.siemens.com/cs/de/en/view/1097510-49)
Extended motion control functions	The SIMATIC Drive Controller contains a SIMATIC S7-1500 technology CPU. The technology CPU provides extended motion control functions: • Extended synchronous operation functions – Synchronization with specification of the synchronous position – Actual value coupling – Offset of leading value on following axis – Camming – Velocity gearing • Up to four encoders or measuring systems as actual position for position control • Control of kinematics, such as – Cartesian portals – Roller pickers – Delta pickers – SCARA • Cross-PLC synchronous operation: Coupling between leading axis or external encoder and following axis via PROFINET IO with IRT	
Integrated closed-loop control functionality	• PID Compact (continuous PID controller) • PID 3Step (step controller for integrating actuators) • PID Temp (temperature controller for heating and cooling with two separate actuators)	PID Control function manual (https://support.industry.siemens.com/cs/ww/en/view/108210-036)

Integrated safety

Function	Description	Additional information
Know-how protection	The know-how protection protects user blocks against unauthorized access and modifications.	SIMATIC Drive Controller system manual (https://support.industry.siemens.com/cs/ww/en/view/109766-665)
Copy protection	Copy protection links user blocks to the serial number of the SIMATIC Memory Card or to the serial number of the SIMATIC Drive Controller. User programs cannot run without the corresponding SIMATIC Memory Card or SIMATIC Drive Controller.	
Local user management (as of CPU FW version V3.1)	Improved management of users, roles, and CPU function rights (User Management & Access Control, UMAC). Via the local user management you manage all project users along with their rights (e.g. access rights) in the editor for users and roles of the project in the TIA Portal.	
Access protection (up to CPU FW version V3.0)	You can use authorization levels to assign separate rights to different users.	
Integrity protection	The CPUs come with an integrity protection function as standard. This helps to detect any manipulation of the engineering data on the SIMATIC Memory Card or during data transfer between the TIA Portal and the CPU, and to check communication from a SIMATIC HMI system to the CPU for possible manipulation of engineering data. The user receives a corresponding message about manipulation of engineering data detected by the integrity protection.	
Password provider	As an alternative to manual password input you can connect a password provider to STEP 7. A password provider offers the following advantages: • Convenient handling of passwords. STEP 7 reads the password automatically for the blocks. This saves you time. • Optimum block protection because the users themselves do not know the password.	

3.6 Firmware functions of SINAMICS Integrated

The automatic speed control integrated in SIMATIC Drive Controller is based on the automatic speed control of the SINAMICS S120 Control Unit CU320-2 (firmware version V5.x).

SINAMICS Integrated provides a functional subset of the SINAMICS S120 CU320-2 drive functions. You can find details at the end of the section under "Unsupported functions and components".

The integrated drive control supports the following:

- Servo control, for maximum dynamic response
- Vector control, for maximum torque accuracy
- U/f control

You can expand the drive configuration limits of the SIMATIC Drive Controller using PROFINET IO IRT, for example with SINAMICS S120 Control Unit CU320-2.

SINAMICS Integrated safety functionality

SINAMICS Integrated of the SIMATIC Drive Controller supports the same Safety Integrated functions as SINAMICS S120 CU320-2.

- Safety Integrated Basic Functions
- Safety Integrated Extended Functions
- Safety Integrated Advanced Functions

The safety functions correspond to the functions pursuant to EN 61800-5-2 (if and to the extent that they are defined therein).

Supported SINAMICS functions requiring a license

SINAMICS Integrated only supports the following licensed functions and Technology Extensions (TEC) of a SINAMICS S120 CU320-2:

- Safety Integrated Extended Functions
- Safety Integrated Advanced Functions
- Detent torque compensation
- Advanced Position Control (APC)
- DCB Extension Library
- Advanced Synchronous Reluctance Control
- Controller Parameter Adaption
- Dynamic network support
- Line droop control
- Technology Extension VIBX (Vibration Extinction)
- Technology Extension SERVCOUP (Servo Coupling)
- Technology Extension DCDCCONV (DC-DC converter)
- Technology Extension RAILCTRL (Rail Control, under development)
- Technology Extension POLYGON (Polygonal Line)
- Technology Extension SETPGEN (Setpoint Generator)

You can find more information in the SIMATIC Drive Controller system manual (https://support.industry.siemens.com/cs/ww/en/view/109766665), in the Runtime licensing section.

PROFIdrive Integrated

Cyclic communication between CPU and SINAMICS Integrated is based on PROFIdrive mechanisms.

The communications services used for this are based on PROFIBUS DP and are processed over an internal, high-performance interface.

Unsupported functions and components

SINAMICS Integrated provides a functional subset of the SINAMICS S120 CU320-2 drive functions. The following functions/components are not supported by the integrated drive control of the SIMATIC Drive Controller:

- Free function blocks (FBLOCKS)
- SINAMICS Web server
- SIMOTION-specific or SINUMERIK-specific DRIVE-CLiQ components (e.g. TM17 Terminal Modules, HLA Hydraulic Drive, CX32-2 Controller Extension, NX10.3/NX15.3 Numeric Control Extensions)
- Expansion boards, e.g. TB30, CBE20, CBE30-2
- Hardware and functions not supported by SINAMICS Startdrive, see (https://support.industry.siemens.com/cs/ww/en/view/109761180)

In addition, not all licensed functions and Technology Extensions (TEC) of a SINAMICS S120 CU320-2 are available to the SINAMICS Integrated. For example, the High Output Frequency function for high output frequencies > 550 Hz is not available.

NOTE

Use of SINAMICS S120 CU320-2 Control Units

Additional CU320-2 Control Units on the SIMATIC Drive Controller have the full range of functions compared with SINAMICS Integrated.

Additional information

The Runtime licensing section in the SIMATIC Drive Controller system manual (https://support.industry.siemens.com/cs/ww/en/view/109766665) describes which licensed functions are available for CPUs and SINAMICS Integrated.

You can find a detailed description of the functions of SINAMICS S120 CU320-2 in the SINAMICS S120 Drive Functions (https://support.industry.siemens.com/cs/us/en/view/109781535) function manual.

3.7 Operator controls, displays and connection elements

3.7.1 View of SIMATIC Drive Controller with covers

The following figure shows the front view of the SIMATIC Drive Controllers.

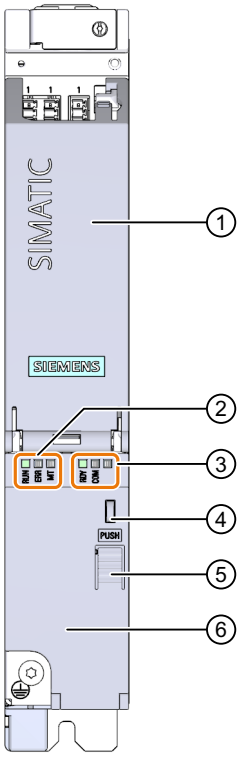

① Top cover
② 3 LEDs for CPU (RUN, ERR, MT)
③ 3 LEDs for SINAMICS Integrated (RDY, COM, third LED has no assigned function)
④ Rings for access security
⑤ Pushbutton for opening and closing the bottom cover
⑥ Bottom cover

Figure 3-4 SIMATIC Drive Controller front view

3.7.2 View of SIMATIC Drive Controller without covers

The figure below shows the operator controls and interfaces on the front of the SIMATIC Drive Controller.

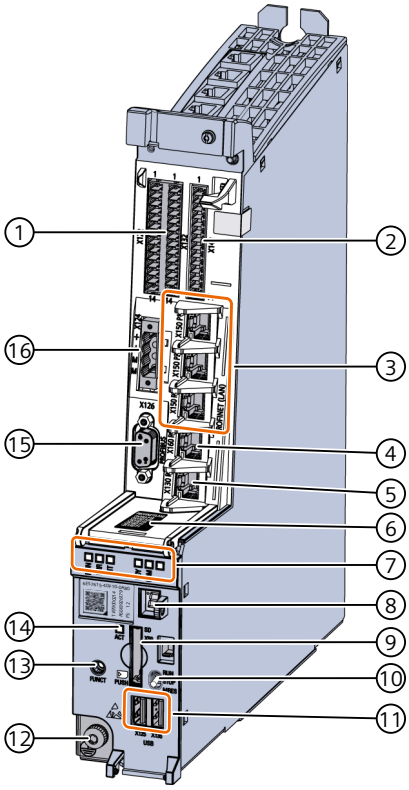

① X122, X132: 12 DI + 8 DI/DQ (assigned to SINAMICS Integrated)
② X142: 8 DI/DQ (assigned to CPU)
③ PROFINET IO IRT (X150), with 3 ports: P1R, P2R, P3
④ PROFINET IO RT (X160), with 1 port (P1)
⑤ Basic PROFINET services (X130), with 1 port (P1), 1000 Mbps
⑥ Interfaces board (X150, X160 and X130)
⑦ LED displays
⑧ 7-segment display, for service and diagnostics purposes
⑨ X50: Slot for SIMATIC Memory Card
⑩ Mode selector, see section Mode selector (Page 46)
⑪ X125, X135: 2 × USB 3.0 interface (no function, no connection permitted)
⑫ Protective conductor connection M5, Torx T25, tightening torque 3 Nm (26.6 lbf in)
⑬ FUNCT button for service and diagnostics purposes, see section FUNCT button (Page 47)
⑭ ACT LED: Display for access to SIMATIC Memory Card
⑮ X126: PROFIBUS DP interface
⑯ X124: Connection for the 24 V DC supply voltage

Figure 3-5 SIMATIC Drive Controller display and operator controls as well as interfaces

NOTE

Labeling of PROFINET interfaces X150, X160 and X130

Labeling of PROFINET interfaces X150, X160 and X130 (③, ④, ⑤) to the left next to the RJ45 sockets was replaced in 2021 by a label plate (⑥). During the transition phase, the SIMATIC Drive Controllers can also have both types of labeling.

NOTICE

Electrostatic discharge without grounding

If there is no grounding or incorrect grounding, electronic components in the device could be damaged by electrostatic discharges (ESD).

Open the cover only when you have grounded yourself using one of the following measures:

- Ground yourself on the cabinet or ground terminal.
- Wear an ESD wrist strap.
- Wear ESD shoes or ESD grounding strips in ESD areas with a conducting floor.

3.7.3 Top view of SIMATIC Drive Controller

The figure below shows the top of the SIMATIC Drive Controller with the four DRIVE-CLiQ interfaces X100 to X103.

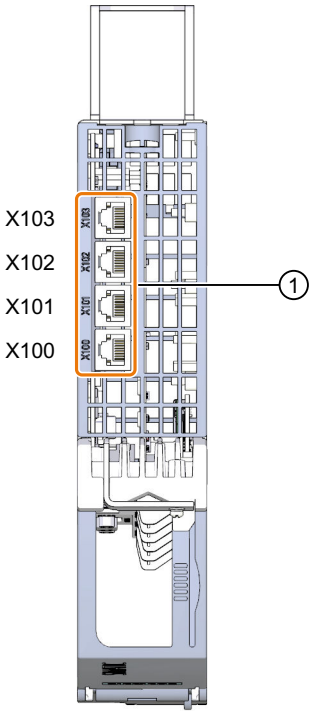

① X100 to X103: 4 × DRIVE-CLiQ interface

Figure 3-6 SIMATIC Drive Controller DRIVE-CLiQ interfaces

3.7.4 View of the SIMATIC Drive Controller from below

There is a DisplayPort interface (X140) and an X127 P1 interface sealed with a mechanical lock located on the underside of the SIMATIC Drive Controller.

- The X140 interface is used exclusively for service purposes by Siemens and cannot be used to connect a display.
- The X127 P1 interface is not available for the SIMATIC Drive Controller.

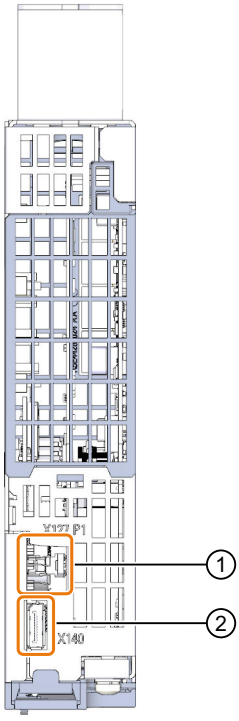

① X127 P1: Sealed interface

② X140: DisplayPort interface

Figure 3-7 SIMATIC Drive Controller view from below

3.7.5 Covers

The interfaces and operator controls on the front are concealed with covers. You must open the covers before you can connect cables to the interfaces or reach the operator controls of the Drive Controller.

NOTICE
Possible damage to electronic components (ESD) Electrostatic discharges can damage electronic components in the device. Open the cover only when you have grounded yourself using one of the following measures: • Ground yourself on the cabinet or ground terminal. • Wear an ESD wrist strap. • Wear ESD shoes or ESD grounding strips in ESD areas with a conducting floor.

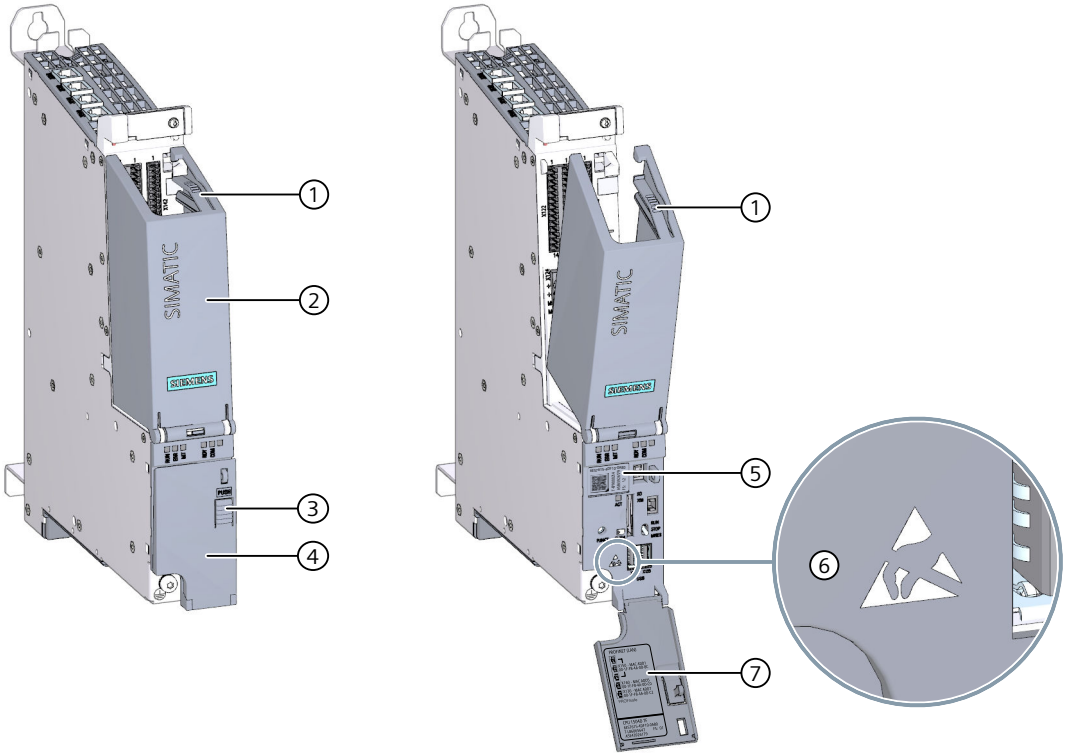

① Release catch for top cover
② Top cover
③ "PUSH" button to lock and unlock the bottom cover
④ Bottom cover
⑤ Front-facing nameplate with QR code with ID Link
⑥ ESD symbol: Designates electrostatic sensitive devices
⑦ Label with MAC addresses and other information

Figure 3-8 SIMATIC Drive Controller covers

Opening the top cover

To open the top cover, follow these steps:

1. Undo the release catch ① on the inside of the cover ② by gently pressing down on it.
2. Fold down the cover ②.

NOTE

The layout and labeling of the interfaces is shown on the inside of the top cover.

Removing the top cover

To remove the top cover, follow these steps:

1. Open the top cover.
2. Release the cover by applying gentle pressure to the side of the hinge.
3. Swing the cover aside to remove it.

Opening the bottom cover

The operator controls of the SIMATIC Drive Controller and the slot for the SIMATIC memory card are located behind the bottom cover.

To open the bottom cover, follow these steps:

1. Press the "Push" button ③ to unlock the cover.
2. Fold down the cover ④.

The MAC addresses ⑥ of the SIMATIC Drive Controller and information about the device can be found on the inside of the bottom cover.

Closing the bottom cover

To close the bottom cover, follow these steps:

1. Tilt the cover up.
2. Press the "Push" button ③ to lock the cover.

Removing the bottom cover

To remove the bottom cover, follow these steps:

1. Open the bottom cover.
2. Release the cover by applying gentle pressure to the side of the hinge.
3. Swing the cover aside to remove it.

3.7.6 Nameplates

The nameplates of the SIMATIC Drive Controller are described below. The contents of the individual nameplate fields of the device may differ from the contents described in this manual (e.g. advanced product version, approvals and markings not yet granted).

Side nameplate

The figure below shows the side nameplate.

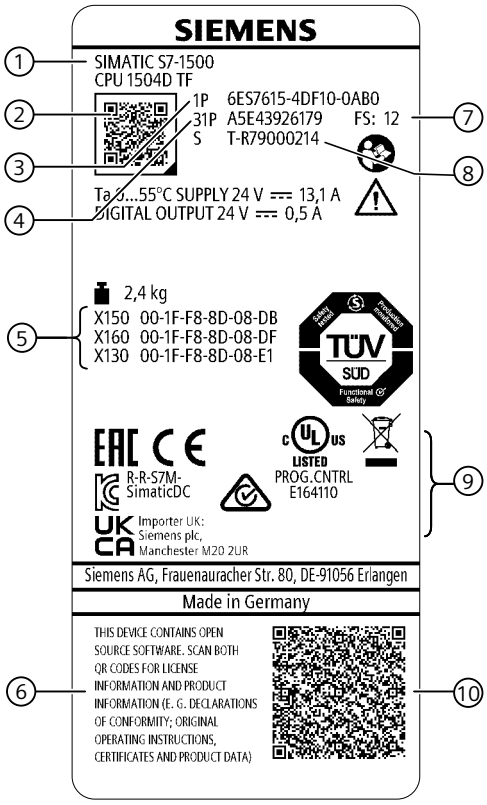

① Product name
② QR code with ID Link
③ Article number
④ Material number
⑤ MAC addresses
⑥ Information on Open Source Software and product information
⑦ Hardware functional status
⑧ Serial number
⑨ Approvals and markings
⑩ QR code for Open Source Software information

Figure 3-9 Side nameplate

Front nameplate

You will find the front nameplate when the bottom cover for the operator controls and displays is open. It contains information about the device as well as a QR code.

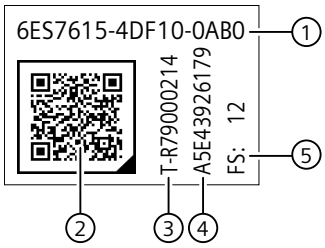

① Article number
② QR code with ID Link
③ Serial number
④ Material number
⑤ Hardware function version

Figure 3-10 Front nameplate

Label on bottom cover

The inside of the bottom cover contains a label with the MAC addresses and additional device information of the SIMATIC Drive Controller.

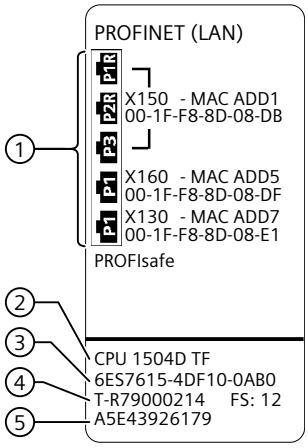

① MAC addresses
② Product name
③ Article number
④ Serial number and HW function version
⑤ Material number

Figure 3-11 Label with MAC addresses

Quick Response Codes (QR codes)

The nameplates of the SIMATIC Drive Controller have a quick response code (QR code) with Identification Link (ID Link). With the QR code with ID Link, you can easily access the product data, manuals, declarations of conformity, certificates and other helpful information about your product.
No special apps or scanners are required for access, all you need is a more recent, standard commercial smartphone that supports QR code capture. You can capture the QR code with the camera function of your smartphone.
Apps such as the Industry Online Support Mobile app (https://www.siemens.com/de/de/produkte/software/mobile-apps/industry-online-support.html) can also capture the QR code.

NOTE

The previous Data Matrix Codes (DMC) have been replaced by HW function version FS11 via QR codes with ID Link. The previous product insert of a CD and product information in paper form is no longer necessary.

QR code with ID Link on nameplate

This QR code contains an Identification Link (ID Link).
The ID Link consists of a subdomain of the Siemens organization (i.siemens.com) and the actual parameter range, in which the parameters are separated by a delimiter.
Example of an ID Link (https://i.siemens.com/1P6ES7615-4DF10-0AB0+ST-R79000214+23S001FF88D08DB)**.**
The ID Link contains product-specific information (article number, serial number and MAC address) to enable a globally unique identification of the product (digital nameplate).

Table 3-5 Content of the QR code

Feature	Data Identifier	Parameter
Article number	1P	6ES7615-4DF10-0AB0
Serial number	S	T-R79000214
MAC address of the X150 interface	23S	001FF88D08DB

You can find detailed information on the MAC addresses under "MAC address assignment" in the section PROFINET X150, X160 and X130 (Page 50).

When the QR code is read, the user is forwarded to a web page with detailed product information, e.g. regarding data sheets, manuals and certificates:

Figure 3-12 Web page with online representation of the product

3.8 Mode selector

The mode selector is designed as a toggle switch. You use the mode selector to set the operating mode of the CPU.

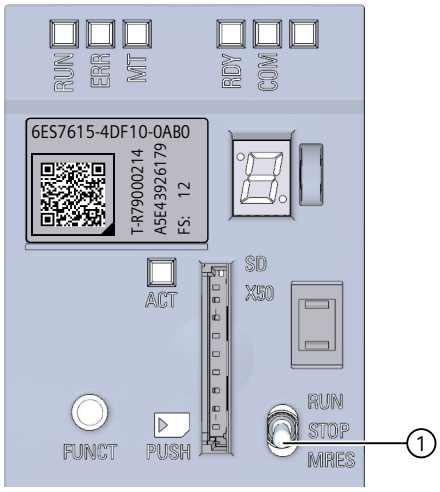

① Mode selector

Figure 3-13 Mode selector

The following table shows the meaning of the three switch positions along with an explanation.

Table 3-6 Mode selector switch positions

Switch position	Meaning	Explanation
RUN – latching	RUN mode	The CPU is running the user program
STOP – latching (center position)	STOP mode	The user program is not running.
MRES – not latching	Memory reset	Position for the memory reset of the CPU

3.9 FUNCT button

You can use the FUNCT button to select and initiate module functions.

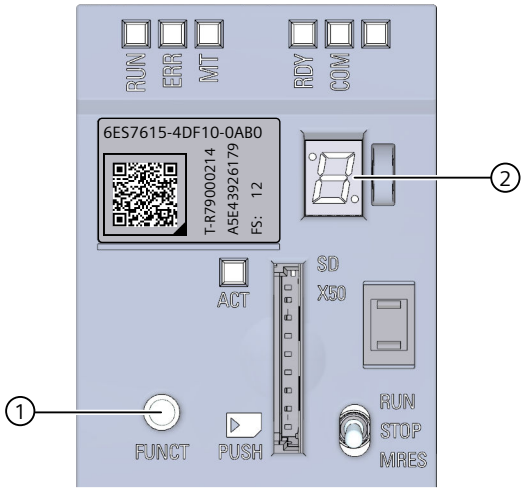

① FUNCT button

② 7-segment display

Figure 3-14 FUNCT button

The following functions are available via the FUNCT button:

- Function 1: Save service data on SIMATIC Memory Card
- Function 2: Switching the SIMATIC Memory Card from program card to firmware update card and performing a firmware update
- Function 3: Switching the SIMATIC Memory Card from firmware update card to program card

Functions 1 to 3 are selected via the FUNCT key. The selection is shown on the 7-segment display. You can only select functions after the CPU has started up.

Exception: The service data is saved to the SIMATIC Memory Card during startup of the SIMATIC Drive Controller using the FUNCT button.

Connecting

4

4.1 Supply voltage X124

24 V DC supply voltage (X124)

The SIMATIC Drive Controller is powered by an external 24 V DC power supply. Power supplies from the SITOP family, for example, can be used.

WARNING

Danger to life from hazardous voltage when an unsuitable power supply is connected

Design the 24 V direct voltage as protective extra-low voltage.

When an external 24 V DC power supply is connected, it must comply with the requirements for protective extra-low voltage (PELV) according to UL 61010. A backup fuse that reliably trips within 120 seconds in the event of a short-circuit at an ambient temperature of 0 °C must also be available.

When OVC III circuits up to 600 V AC (phase to neutral voltage) are the primary supply of the utilized power supply, ensure that the clearance between open contacts of the fuse or the single-fault-secure circuit is 3.0 mm according to UL 61010.

When using an external power supply, ensure that the trip rating of the utilized fuse corresponds to the maximum possible short-time short-circuit current of the utilized power supply.

NOTE

Ground potential and enclosure (PE) are connected to one another internally with low impedance. You must therefore observe the following:

- Insulation monitoring devices are not permitted in the 24 V power supply.
- If you are using external power supplies (e.g. SITOP), you must connect the ground potential to the protective conductor terminal (PELV).
- You must provide adequately dimensioned equipotential bonding connections between the 24 V power supply and all grounded, locally separate loads.

You can find information on equipotential bonding in the SIMATIC Drive Controller system manual (https://support.industry.siemens.com/cs/ww/en/view/109766665).

The following table shows the pin assignment of the 4-pin connector.

Table 4-1 Connector pin assignment for 24 V DC power supply

X124	Pin	Signal name	Meaning	Technical specifications
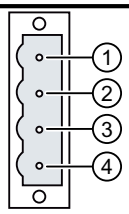	1	+	Power supply	24 V DC supply voltage (20.4 ... 28.8 V) Current consumption, max.: 13.1 A
	2	+		
	3	M	Ground	
	4	M		

The 24 V supply is looped through via the 24 V connector. In the connector, pin 1 is jumpered to pin 2 and pin 3 is jumpered to pin 4. The maximum current can be limited by the current carrying capacity of the cable. The current carrying capacity of the cable depends on the cabling method (e.g. in a cable duct, on a cable rack), among other things.

Select the permissible conductor cross-section in conformance with national rules (NEC, VDE, etc.) from the following table "Interface X124". The basis for this can be the output current of the 24 V DC supply or the overcurrent device used in the 24 V circuit. If the short-circuit current of the utilized 24 V power supply unit is greater than 50 A, an appropriate overcurrent device that limits the short-circuit current to this value must be used upstream of the product.

NOTE

- The 24 V DC cable must be approved for temperatures of up to 75 °C.
- The maximum permissible cable length is 10 m.

Characteristics of the X124 interface

Table 4-2 Interface X124

Properties		Version
Connector type		4-pin screw-type terminal
Number of connectable conductors		1
Connectable conductor types and conductor cross-sections		
	Solid	0.2 mm² ... 2.5 mm²
	Flexible	0.2 mm² ... 2.5 mm²
	Flexible with wire-end ferrule without plastic sleeve	0.2 mm² ... 2.5 mm²
	Flexible with wire-end ferrule with plastic sleeve	0.2 mm² ... 1.5 mm²
	AWG / kcmil	22 ... 12
Stripped length		6 ... 7 mm

1) This value must be ensured for the current carrying capacity of the power cable.

Properties	Version
Tool	Screwdriver 0.5 x 3 mm (M2.5)
Tightening torque	0.4 to 0.5 Nm (3.5 to 4.4 lbf in)
Max. current carrying capacity including loop-through	20 A [1] (15 A according to UL/CSA)

[1] This value must be ensured for the current carrying capacity of the power cable.

See also

SIMATIC Drive Controller block diagram (Page 59)

4.2 PROFINET X150, X160 and X130

PROFINET interface X150 with 3 ports (X150 P1R, X150 P2R, X150 P3)

The assignment corresponds to the Ethernet standard for an RJ45 connector.

- When autonegotiation is deactivated, the RJ45 socket is allocated as a switch (MDI-X).
- When autonegotiation is activated, autocrossing is in effect and the RJ45 socket is allocated either as data terminal equipment (MDI) or a switch (MDI-X).

PROFINET interface X160 with 1 port (X160 P1)

The assignment corresponds to the Ethernet standard for an RJ45 connector.

Autocrossing is always active on X160. This means the RJ45 socket is allocated either as data terminal equipment (MDI) or a switch (MDI-X).

PROFINET interface X130 with 1 port (X130 P1)

The assignment corresponds to the Ethernet standard for an RJ45 connector.

NOTE

PROFINET interface X130 with a transmission rate of 1000 Mbps

PROFINET interface X130 supports a maximum transmission rate of 1000 Mbps.

Requirements:

- Devices must support the 1000 Mbps transmission rate.
- The network infrastructure (network cables and outlets) must be category CAT 5e or better.
- For 1000 Mbps, you must use 8-wire cables (4x2) and the 1000 Mbit version of the 180° FastConnect plug. You can use the 145° FastConnect plugs for PROFINET interface X130 only with a max. transmission rate of 100 Mbps.

The "Transmission rate" parameter in the properties of the port (X130) must be set in STEP 7 as follows:

- The "Autonegotiation" check box is selected.
- "Automatic" is selected in the drop-down list.

Pin assignment of interfaces X150, X160, X130

Table 4-3 Pin assignment of interfaces X150, X160, X130

View	Pin	Assignment in 10/100 Mbit mode		Assignment in 1000 Mbit mode	
		Signal name	**Description**	**Signal name**	**Description**
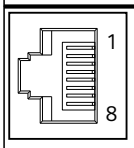	1	TXP	Transmit data +	DA+	Bidirectional pair A+
	2	TXN	Transmit data -	DA-	Bidirectional pair A-
	3	RXP	Receive data +	DB+	Bidirectional pair B+
	4	-	Reserved; no connection	DC+	Bidirectional pair C+
	5	-	Reserved; no connection	DC-	Bidirectional pair C-
	6	RXN	Receive data -	DB-	Bidirectional pair B-
	7	-	Reserved; no connection	DD+	Bidirectional pair D+
	8	-	Reserved; no connection	DD-	Bidirectional pair D-

Assignment of MAC addresses

The SIMATIC Drive Controller has three PROFINET interfaces. Interface X150 is an interface with 3-port switch. The PROFINET interfaces each have a MAC address, and each of the PROFINET ports has its own MAC address, resulting in a total of 8 MAC addresses for the SIMATIC Drive Controller.

The MAC addresses of the PROFINET ports are needed for the LLDP protocol, for example, for the neighbor discovery function. The number range of the MAC addresses is sequential.

You will find the MAC addresses of the SIMATIC Drive Controller at the following places:

- Side nameplate MAC addresses of the interfaces; the first MAC address is also contained in the QR code with ID Link
- Front nameplate: The MAC addresses of the interfaces are included in the QR code with ID Link.
- On the inside of the bottom cover: MAC addresses of the interfaces

You can find detailed information on the nameplates in section Nameplates (Page 42).

The table below shows how the MAC addresses are assigned.

Table 4-4 Assignment of MAC addresses

	Assignment	Side nameplate	Front nameplate	Label on bottom cover
MAC address 1	PROFINET interface X150 (visible in STEP 7 in accessible devices)	MAC address labeled QR code with MAC address	QR code with MAC address	MAC address labeled
MAC address 2	Port X150 P1R (needed for LLDP, for example)	-	-	-
MAC address 3	Port X150 P2R (needed for LLDP, for example)	-	-	-
MAC address 4	Port X150 P3 (needed for LLDP, for example)	-	-	-
MAC address 5	PROFINET interface X160 (visible in STEP 7 in accessible devices)	MAC address labeled	-	MAC address labeled
MAC address 6	Port X160 P1 (needed for LLDP, for example)	-	-	-
MAC address 7	PROFINET interface X130 (visible in STEP 7 in accessible devices)	MAC address labeled	-	MAC address labeled
MAC address 8	Port X130 P1 (needed for LLDP, for example)	-	-	-

QR code: Quick Response Code

"-" means: MAC address is not labeled or marked

See also

Covers (Page 39)

4.3 PROFIBUS X126

The SIMATIC Drive Controller has a PROFIBUS DP interface (X126).

Pin assignment of X126 interface

The table below shows the pin assignment of the PROFIBUS interface. The assignment corresponds to the standard assignment of an RS485 interface.

Table 4-5 Pin assignment of PROFIBUS interface

View	Pin	Signal name	Designation
	1	-	-
	2	-	-
	3	RxD/TxD-P	Data line B
	4	RTS	Request to send
	5	M5V2	Data reference potential (from station)
	6	P5V2	Supply plus (from station)

View	Pin	Signal name	Designation
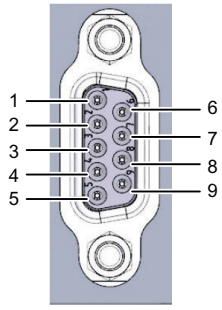	7	-	-
	8	RxD/TxD-N	Data line A
	9	-	-

NOTE

Supply of I/O devices

The SIMATIC Drive Controller does not make a 24 V DC supply voltage available at the PROFIBUS interface. I/O devices (for example, PC adapter USB 6ES7972-0CB20-0XA0) are only operational on the interface in conjunction with a plug-in power supply set for external power supply.

The innovated successor product, PC adapter USB A2 (6GK1571-0BA00-0AA0), obtains the needed supply voltage via the USB port. For this reason, it does not need a 24 V DC power supply. You can operate the PC adapter USB A2 **without** a plug-in power supply set for external power supply.

4.4 Digital inputs and outputs of X122, X132 and X142

The digital inputs and digital outputs at the X122, X132 and X142 sockets are intended for connection of sensors and actuators.

Characteristics of X122, X132 and X142

Table 4-6 Interfaces X122, X132 and X142

Properties		Version
Connector type		Spring-loaded terminal, 14-pin
Number of connectable conductors		1
Connectable conductor types and conductor cross-sections		
•	Solid	0.2 mm² ... 1.5 mm²
•	Flexible	0.2 mm² ... 1.5 mm²
•	Flexible with wire-end ferrule without plastic sleeve	0.25 mm² ... 1.5 mm²
•	Flexible with wire-end ferrule with plastic sleeve	0.25 mm² ... 0.75 mm²
•	AWG/kcmil	24 ... 16
Stripped length		10 mm
Current-carrying capacity (ground)		≤ 6 A

NOTE

The maximum permissible cable length is 30 m.

Breakdown into digital inputs and digital outputs

The figure below shows the breakdown of the X122/X132 and X142 interfaces into digital inputs and digital outputs.
The X122 and X132 interfaces are allocated to SINAMICS Integrated of the SIMATIC Drive Controller.
The X142 interface is allocated to the CPU of the SIMATIC Drive Controller.

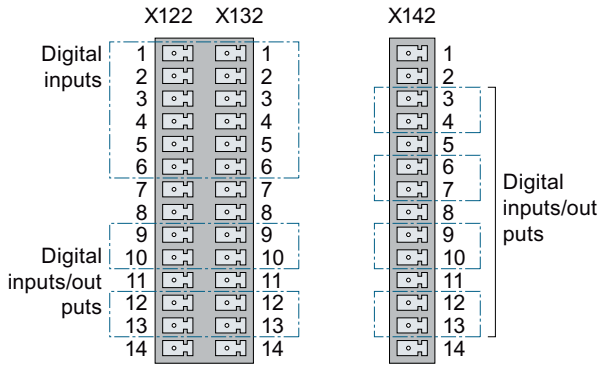

Figure 4-1 Interface assignment of X122/X132 and X142

Pin assignment of the X122 and X132 interfaces

Table 4-7 Digital inputs and digital inputs/outputs of X122

Pin	Designation [1]	Signal type [2]	Notes
1	DI0	I	Digital input 0
2	DI1	I	Digital input 1
3	DI2	I	Digital input 2
4	DI3	I	Digital input 3
5	DI16	I	Digital input 16
6	DI17	I	Digital input 17
7	M1	GND	Ground for DI0 to DI3, DI16, DI17 (isolated from M)
8	M	GND	Ground
9	DI/DQ8	B	Digital input/output 8 (also usable as measurement sensing input)
10	DI/DQ9	B	Digital input/output 9 (also usable as measurement sensing input)
11	M	GND	Ground
12	DI/DQ10	B	Digital input/output 10 (also usable as measurement sensing input)
13	DI/DQ11	B	Digital input/output 11 (also usable as measurement sensing input)
14	M	GND	Ground

[1] DI: Digital input; DI/DQ: Bidirectional digital input/output; M: Electronic ground; M1: Ground reference
[2] B = Bidirectional; I = Input; GND = Reference potential (ground)

Table 4-8 Digital inputs and digital inputs/outputs of X132

Pin	Designation [1]	Signal type [2]	Notes
1	DI4	I	Digital input 4
2	DI5	I	Digital input 5
3	DI6	I	Digital input 6
4	DI7	I	Digital input 7
5	DI20	I	Digital input 20
6	DI21	I	Digital input 21
7	M2	GND	Ground for DI4 to DI7, DI20, DI21 (isolated from M)
8	M	GND	Ground
9	DI/DQ12	B	Digital input/output 12 (also usable as measurement sensing input)
10	DI/DQ13	B	Digital input/output 13 (also usable as measurement sensing input)
11	M	GND	Ground

Pin	Designation [1]	Signal type [2]	Notes
12	DI/DQ14	B	Digital input/output 14 (also usable as measurement sensing input)
13	DI/DQ15	B	Digital input/output 15 (also usable as measurement sensing input)
14	M	GND	Ground

[1] DI: Digital input; DI/DQ: Bidirectional digital input/output; M: Electronic ground; M2: Ground reference
[2] B = Bidirectional; I = Input; GND = Reference potential (ground)

NOTE

An open input is interpreted as "low".
So that the digital inputs will function, connect terminal M1 or M2. The alternatives are as follows:

- Connect the coupled reference ground of the digital inputs to M1 or M2.
- Connect a jumper to terminal M and terminal M1 (or between M and M2).
  This removes the electrical isolation for these digital inputs.

Pin assignment of X142 interface

Pin	Designation [1]	Signal type [2]	Notes
1	–	–	Reserved
2	–	–	Reserved
3	DI/DQ0	B	Digital input/output 0
4	DI/DQ1	B	Digital input/output 1
5	M	GND	Ground for digital input/output
6	DI/DQ2	B	Digital input/output 2
7	DI/DQ3	B	Digital input/output 3
8	M	GND	Ground for digital input/output
9	DI/DQ4	B	Digital input/output 4
10	DI/DQ5	B	Digital input/output 5
11	M	GND	Ground for digital input/output
12	DI/DQ6	B	Digital input/output 6
13	DI/DQ7	B	Digital input/output 7
14	M	GND	Ground for digital input/output

[1] DI/DQ: Bidirectional digital input/output; M: Electronic ground
[2] B = Bidirectional; GND = Reference potential (ground)

Power supply for X142 digital inputs/outputs

If you use the X142 digital inputs/outputs partly as inputs and partly as outputs (mixed operation), you need to supply the digital inputs over the same power supply as the SIMATIC Drive Controller (X124 module supply).

This restriction does not apply if you operate the X142 digital inputs/outputs exclusively as inputs or as outputs.

The X122/X132 digital inputs/outputs are not affected by this restriction.

Digital outputs at the X142 interface

You configure each of the digital outputs as sourcing output or as high-speed output:

- Sourcing output: The digital output is a 24 V sourcing output in reference to M and can carry a rated load current of 0.5 A.
- High-speed output: The digital output is a high-speed push-pull switch and can carry a rated load current of 0.4 A. A push-pull switch is alternately switched to 24 V DC and ground. Very steep edges are possible as a result.

The digital outputs are protected against overload and short-circuit.

The direct connection of relays and contactors is possible without external wiring.

NOTICE
Overheating of unsuitable loads A high-speed output generates edges that are very steep. This generates very powerful charge reversals for the connected load, which can overheat the load at very high switching frequencies. The connected load must therefore be suited for high input frequencies.

NOTE

If you use a digital output as a sourcing output, its switch-off response/switch-off edge is dependent on the connected load. Thus it is possible that very short pulses cannot be output correctly.

NOTE

For optimal interference immunity and high-accuracy signal acquisition, we recommend the use of shielded cables in the following cases:

- Very brief signal levels or very fast signal changes occur at the digital inputs, e.g. when used as timer DI/measurement sensing input, as oversampling DI or for event/period duration measurement
- An input delay of 1 µs is set for X142

4.5 DRIVE-CLiQ interfaces X100 to X103

You connect all the components of the SINAMICS S120 drive system including motors and encoders using the DRIVE-CLiQ interface.

Properties of a DRIVE-CLiQ interface

Table 4-9 DRIVE-CLiQ interfaces X100 to X103

Property	Version
Connector type	DRIVE-CLiQ connector (RJ45 socket)
Cable type, inside the control cabinet	DRIVE-CLiQ standard
Cable type, outside the control cabinet	MOTION CONNECT
Blanking plug for closing unused DRIVE-CLiQ interfaces	Blanking plugs are included in the scope of delivery of the SIMATIC Drive Controller. Additional blanking plugs are available as accessories.

NOTE

The maximum permissible cable length is 100 m.

Pin assignment of a DRIVE-CLiQ interface

Table 4-10 Pin assignment of DRIVE-CLiQ interfaces X100 to X103

View	Pin	Signal name	Type of signal	Meaning
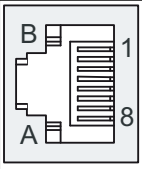	1	TXP	Output	Transmit data +
	2	TXN	Output	Transmit data -
	3	RXP	Input	Receive data +
	4	-	-	Reserved; no connection
	5	-	-	Reserved; no connection
	6	RXN	Input	Receive data -
	7	-	-	Reserved; no connection
	8	-	-	Reserved; no connection
	A	+ (24 V)	Voltage Output	Voltage supply for DRIVE-CLiQ, ≤ 450 mA
	B	M (0 V)	Voltage Output	Ground for 24 V

4.6 Wiring and block diagrams

4.6.1 SIMATIC Drive Controller block diagram

The figure below shows a simplified block diagram of the SIMATIC Drive Controller.

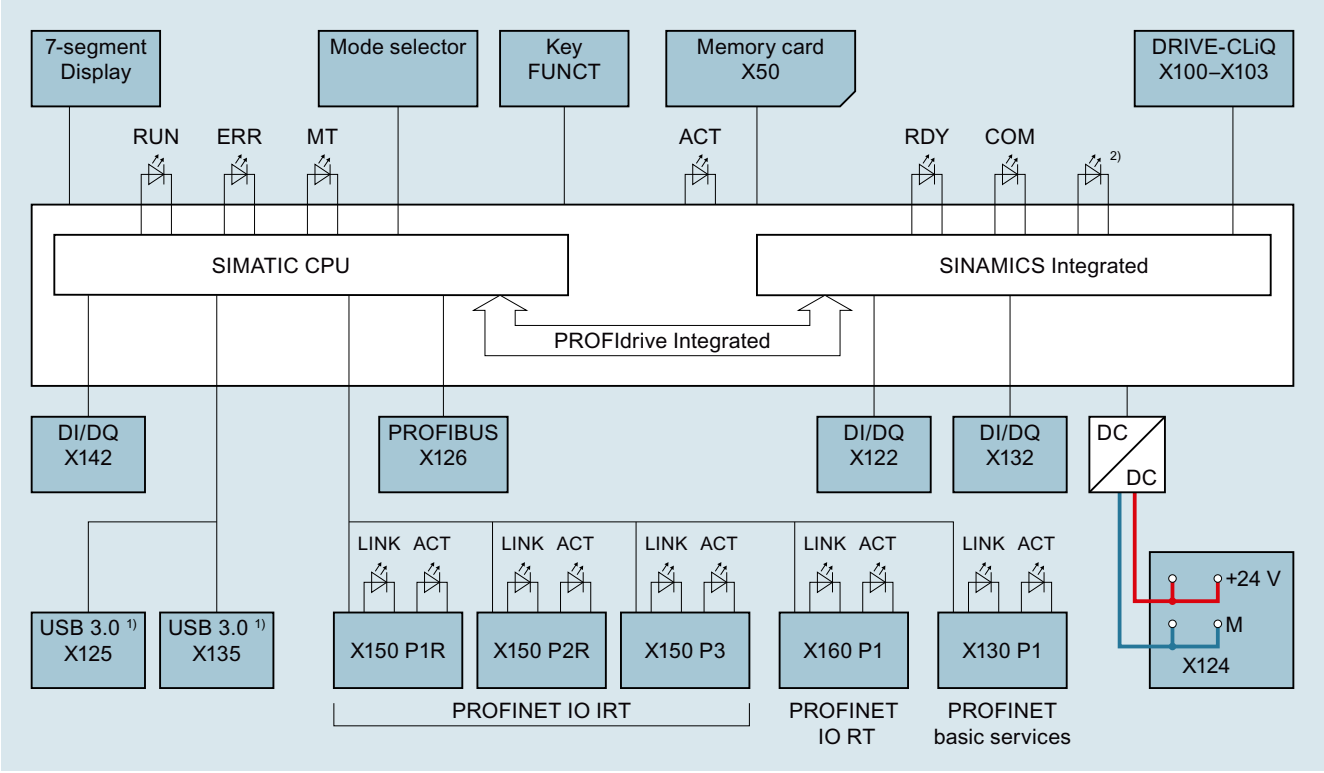

1) USB ports are non-functional, no connection permitted

2) No function (exception: lamp test at POWER ON)

Figure 4-2 SIMATIC Drive Controller block diagram

See also

Digital inputs and outputs of X122, X132 and X142 (Page 54)

4.6.2 Onboard digital inputs/digital outputs of X122, X132 and X142

The figure below shows the wiring and block diagram of the digital inputs and digital inputs/outputs of the SIMATIC Drive Controller.

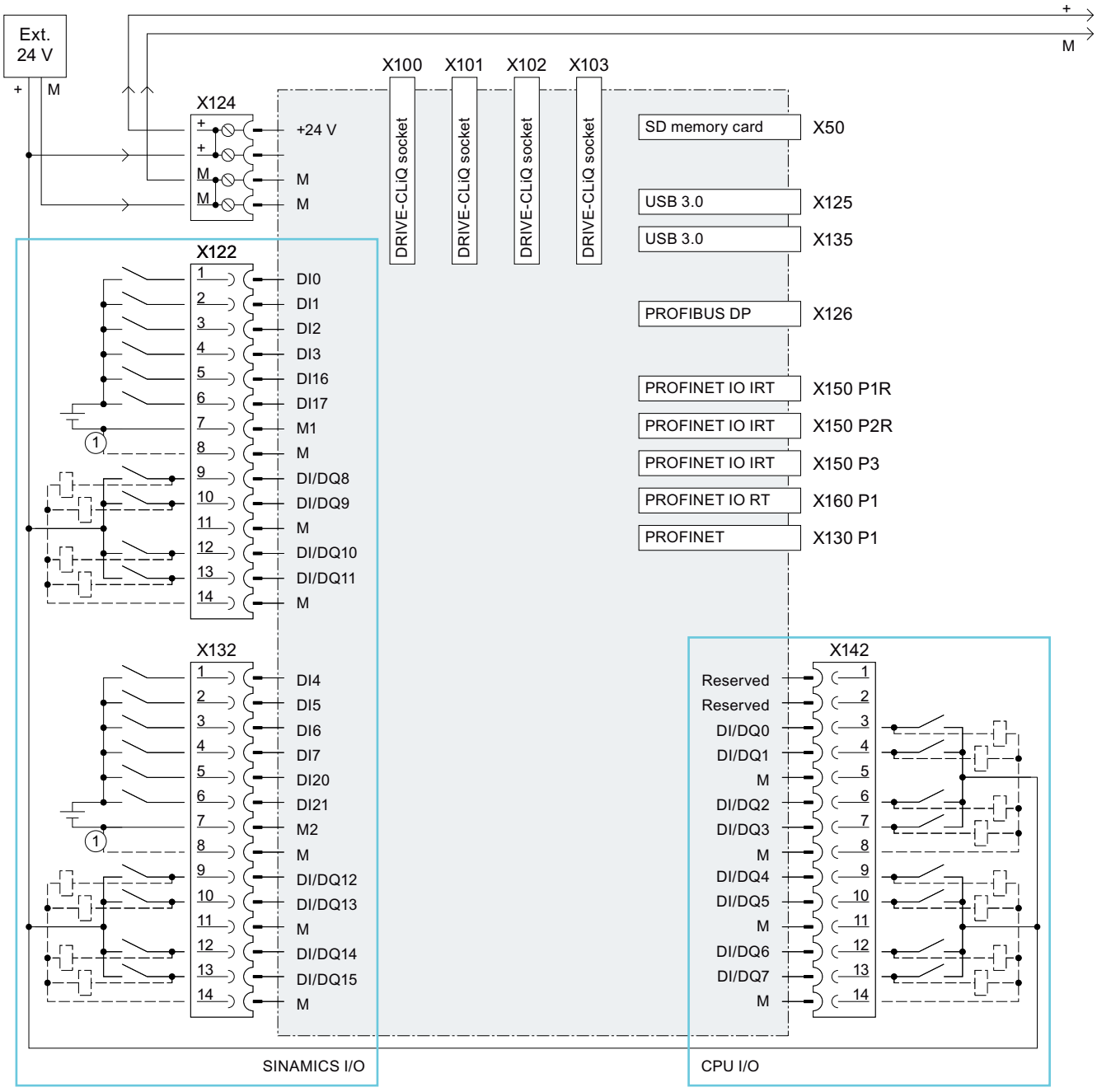

① Connection removes electrical isolation

Figure 4-3 Wiring and block diagram of onboard digital inputs and digital inputs/outputs

NOTE
Open input of digital inputs
An open input is interpreted as "low".
So that the digital inputs will function, connect terminal M1 or M2. The alternatives are as follows:

- Connect the coupled reference ground of the digital inputs to M1 or M2.
- Connect a jumper to terminal M and terminal M1 (or between M and M2). This removes the electrical isolation for these digital inputs.

The interfaces of the onboard I/O are described in section Digital inputs and outputs of X122, X132 and X142 (Page 54).

4.6.3 DRIVE-CLiQ interfaces X100 to X103

DRIVE-CLiQ wiring of an axis group

The figure below shows a possible DRIVE-CLiQ wiring of an axis group.

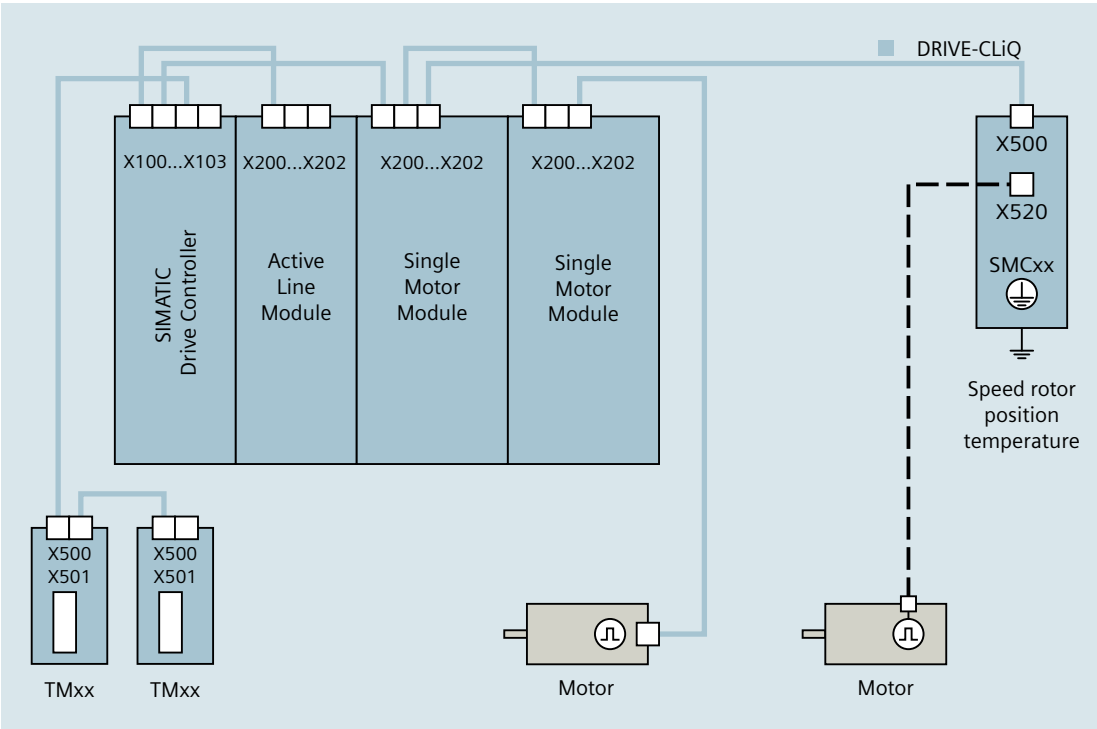

Figure 4-4 Example of a DRIVE-CLiQ wiring of an axis group

Wiring rules

Neither ring wiring nor double wiring of components is permitted in the DRIVE-CLiQ wiring. In the case of a Motor Module, you must connect the power cable to the motor and the associated encoder.

Further information

You can find more information on DRIVE-CLiQ wiring in the following:

- SIMATIC Drive Controller (https://support.industry.siemens.com/cs/ww/en/view/109766665) system manual, section "Connecting"
- SINAMICS S120 Drive Functions (https://support.industry.siemens.com/cs/us/en/view/109781535) function manual, section "Rules for wiring with DRIVE-CLiQ"

Interrupts, diagnostics alarms, error messages and system alarms

5

5.1 Status and error displays

5.1.1 Overview

Location of status displays

The figure below shows the location of the status displays on the SIMATIC Drive Controller. LEDs ① to ③ indicate the operating states of the CPU. LEDs ④ and ⑤ indicate the operating states of SINAMICS Integrated. The 7-segment display ⑦ shows additional status information in certain operating states. The ACT LED ⑧ indicates write/read accesses to the SIMATIC Memory Card.

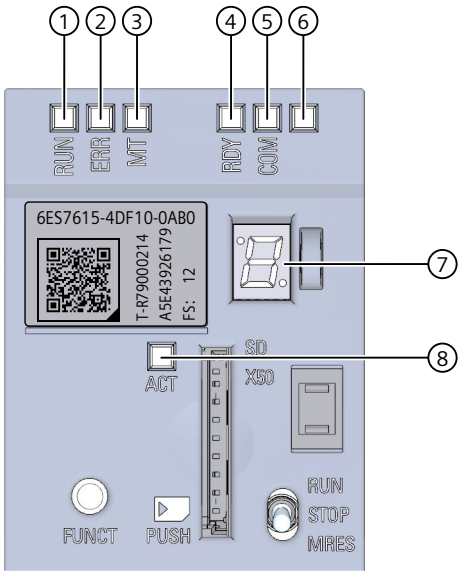

① RUN/STOP LED, green/yellow
② ERROR LED, red/yellow
③ MAINT LED, yellow
④ RDY LED, red/green/yellow
⑤ COM LED, red/green/yellow
⑥ No function
⑦ 7-segment display
⑧ ACT LED, yellow

Figure 5-1 SIMATIC Drive Controller status displays

LED display during reset

At POWER ON, the SIMATIC Drive Controller performs a reset. During the reset, all LEDs are lit yellow (lamp test).

5.1.2 Status and error display of the CPU

Meaning of the RUN/STOP, ERROR and MAINT LEDs

The SIMATIC Drive Controller has three LEDs for displaying the current operating state and the diagnostics status of the CPU. The following table shows the meaning of the various combinations of colors for the RUN/STOP, ERROR and MAINT LEDs.

Table 5-1 Meaning of the LEDs

RUN/STOP LED	ERROR LED	MAINT LED	Meaning
LED off	LED off	LED off	Missing or insufficient supply voltage on the CPU.
LED off	LED flashes red	LED off	An error has occurred.
LED lit green	LED off	LED off	CPU is in RUN mode.
LED lit green	LED flashes red	LED off	A diagnostics event is pending.
			Service data backup in RUN ended with error.
LED lit green	LED off	LED lit yellow	Maintenance demanded for the plant (e.g. Warning: CPU overtemperature). The affected hardware must be checked/replaced within a short period of time.
			Active Force job
			OPC UA server of the CPU expects initial trust lists and CRLs via GDS Push function.
LED lit green	LED off	LED flashes yellow	Bad configuration
LED lit yellow	LED off	LED flashes yellow	Firmware update was successfully completed.
LED lit yellow	LED off	LED off	CPU is in STOP mode.
			CPU runs a program with active breakpoints. The program is at a breakpoint.
LED lit yellow	LED flashes red	LED flashes yellow	The program on the SIMATIC Memory Card is causing an error.
			Error state of the CPU Additional information is available via the CPU diagnostic buffer.
			Error during firmware update
			Update of an incompatible SINAMICS Integrated firmware was refused

RUN/STOP LED	ERROR LED	MAINT LED	Meaning
LED lit yellow	LED flashes red	LED off	A diagnostics event is pending.
			Service data backup in STOP ended with error.
LED flashes yellow	LED off	LED off	CPU is performing internal activities during STOP, for example, ramp-up after STOP, firmware update.
			CPU stores service data
			Download of the user program from the SIMATIC Memory Card
			CPU runs a program with active break-point. The program is presently moving from one breakpoint to the next.
LED flashes yellow/green	LED off	LED off	Startup (transition from STOP → RUN)
LED flashes yellow/green	LED flashes red	LED flashes yellow	Startup (CPU booting)
			Test of LEDs during startup, inserting a module.
			LED flashing test
LED lit yellow	LED lit yellow	LED lit yellow	Lamp test at POWER ON Note: All six LEDs and the ACT-LED on the card slot are lit yellow.

5.1.3 Status and error display of SINAMICS Integrated

RDY LED states

Table 5-2 SINAMICS Integrated RDY LED

RDY LED	Meaning
LED off	Electronics power supply is missing or is outside the permissible tolerance range
LED lit green	The component is ready for operation. Cyclic DRIVE-CLiQ communication is active or SINAMICS Integrated is waiting for first commissioning.
LED flashes green (0.5 Hz)	Commissioning/reset
LED lit yellow	System is booting and DRIVE-CLiQ communication is being established.
LED flashes yellow (2 Hz)	Firmware update of components is complete, waiting for POWER ON of the com-ponent. Remedy: Perform POWER ON of the respective component

RDY LED	Meaning
LED flashes yellow (0.5 Hz)	Firmware update of the connected DRIVE-CLiQ components in progress.
LED lit red	Component has at least one fault.
LED flashes red (2 Hz)	General errors Remedy: Check parameter assignment/configuration
	Firmware could not be started. (for example, update error, drive firmware not compatible with CPU or missing, CRC check failed)
LED flashes green-yellow (2 Hz)	Component detection via LED is activated (p0124[0]). **Note** The two possibilities depend on the status of the LED at time of activation via p0124[0] = 1.
LED flashes red-yellow (2 Hz)	

COM LED states

Table 5-3 SINAMICS Integrated COM LED

COM LED	Meaning
LED off	Cyclic communication has not (yet) taken place. **Note** PROFIdrive is ready for communication when the SINAMICS Integrated is ready for operation (see RDY LED).
LED lit green	Cyclic communication is active. Synchronization complete.
LED flashes green (0.5 Hz)	Cyclic communication is not yet fully active. Possible causes: • The controller is not transferring setpoints. • In isochronous mode, synchronization is not yet complete.
LED flashes red (2 Hz)	Cyclic bus communication has been interrupted or could not be established. Remedy: Eliminate fault

5.1.4 ACT LED and interface LEDs

Meaning of ACT LED

The ACT LED is located next to the memory card slot and indicates write/read accesses to the SIMATIC memory card.

Table 5-4 ACT LED

ACT LED	Meaning
LED off	No access to the SIMATIC memory card
LED flickers yellow	Access to the SIMATIC memory card

If you remove the SIMATIC memory card during a write operation, the following problems may occur:

- The data content of a file is incomplete.
- The file is no longer readable or no longer exists.
- The entire data content is corrupted.

Regarding the removal of the SIMATIC memory card, note also the following FAQ on the Internet (https://support.industry.siemens.com/cs/ww/en/view/59457183).

Meaning of the LEDs of the PROFINET interface X130, X150, X160

For diagnostic purposes, each of the RJ45 sockets is equipped with a LINK LED and and ACTIVITY LED. The LEDs are used to display the following status information of the respective PROFINET interface.

Table 5-5 LEDs of PROFINET interface X130, X150, X160

RJ45 socket	LINK LED	ACTIVITY LED	Meaning
LINK 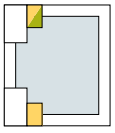 ACTIVITY	LED off	LED off	There is no communication connection between the PROFINET interface of the SIMATIC Drive Controller and the communication partner. No data is currently being sent/received via the PROFINET interface. There is no LINK connection.
	LED flashes green	–	The "LED flashing test" is being performed.
	LED lit green	–	A 10/100 Mbps communication connection exists between the PROFINET interface of the SIMATIC Drive Controller and a communication partner.

RJ45 socket	LINK LED	ACTIVITY LED	Meaning
LINK 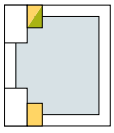 ACTIVITY	LED lit yellow	–	A 1000 Mbps communication connection exists between the PROFINET interface of the SIMATIC Drive Controller and a communication partner.
	LED lit green	LED flickers yellow	Data is currently being received/transmitted at 10/100 Mbps by a communication partner via the PROFINET interface of the SIMATIC Drive Controller.
	LED lit yellow	LED flickers yellow	Data is currently being received/transmitted at 1000 Mbps by a communication partner via the PROFINET interface of the SIMATIC Drive Controller.

See also

View of SIMATIC Drive Controller without covers (Page 37)

5.1.5 7-segment display

Status information via 7-segment display

In addition to the LED display, the 7-segment display indicates further status information during commissioning and cyclic operation.

Table 5-6 7-segment display

7-segment display	Meaning
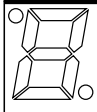	Missing or insufficient supply voltage on the CPU
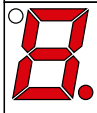	HW states before the start of the CPU firmware
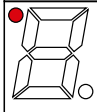	Startup of the CPU
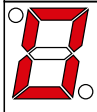	Startup of CPU complete (0 = STOP or RUN state)
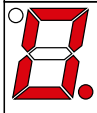	CPU startup terminated (CPU firmware not started) • Example: Function for reading the Open Source Software information has been terminated; in this case, the CPU firmware does not start.
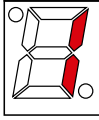	Function 1: Save service data on SIMATIC Memory Card

7-segment display	Meaning
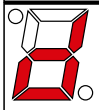	"Save service data" function active (d = data)
	Function 2: Use the SIMATIC Memory Card as firmware update card and perform a firmware update
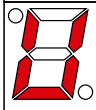	SIMATIC Memory Card is converted to firmware update card (U = Update)
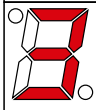	Function 3: Use the SIMATIC Memory Card as program card
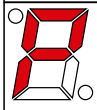	SIMATIC Memory Card is converted to program card (P = Program)
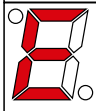	Exit function selection mode (E = Exit)
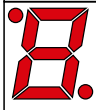	Reset: At POWER ON, the SIMATIC Drive Controller performs a reset. During a reset, all segments including the two dots are briefly lit (lamp test).
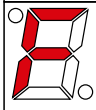	Error state (F = Fault) The function cannot be triggered using the FUNCT button, since one requirement is not fulfilled, for example: • No SIMATIC Memory Card inserted. • The write protection of the SIMATIC Memory Card has been set. • Switching the SIMATIC Memory Card to firmware update card is not possible, since the CPU is not in STOP operating mode. • Switching the SIMATIC Memory Card to firmware update card or program card using the FUNCT button is only possible between these two operating modes (not, for example, from DUMP or SET_PWD).
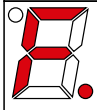	Error state (F=Fault, CPU firmware not started) • Example: Function for reading the Open Source Software information was terminated incorrectly; in this case, the CPU firmware does not start.
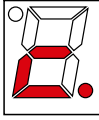	Open Source software information is copied to memory card (c = copy)

See also

View of SIMATIC Drive Controller without covers (Page 37)

5.2 Interrupts, diagnostics and system messages

5.2.1 Interrupts, diagnostics and system messages

For information on "Interrupts", refer to the STEP 7 online help.
For information on "Diagnostics" and "System alarms", refer to the Diagnostics (https://support.industry.siemens.com/cs/ww/en/view/59192926) function manual.

Technical specifications

6

Technical specifications of SIMATIC Drive Controller

The following table shows the technical specifications as of 11/2023. You will find a data sheet including daily updated technical specifications on the Internet:

- CPU 1504D TF (https://support.industry.siemens.com/cs/ww/en/pv/6ES7615-4DF10-0AB0/td?dl=de)
- CPU 1507D TF (https://support.industry.siemens.com/cs/ww/en/pv/6ES7615-7DF10-0AB0/td?dl=de)

Article number	6ES7615-4DF10-0AB0	6ES7615-7DF10-0AB0
General information		
Product type designation	CPU 1504D TF	CPU 1507D TF
HW functional status	FS12	
Firmware version	PLC: V3.1 / SINAMICS Integrated: V5.2 SP3	
• FW update possible	Yes	
Product function		
• I&M data	Yes; I&M0 to I&M3	
• Isochronous mode	Yes; With minimum OB 6x cycle of 500 µs	Yes; with minimum OB 6x cycle of 250 µs
• SysLog	Yes	
Engineering with		
• STEP 7 TIA Portal configurable/integrated from version	V19 (FW V3.1) / V16 (FW V2.8) or higher	
Integrated drive control		
• Number of axes for servo control, max.	6	
• Number of axes for vector control, max.	6	
• Number of axes for V/f control, max.	12	
• Remark	alternative control modes; drive control based on SINAMICS S120 CU320-2 (firmware version V5.x); functional subset compared to CU320-2: no free function blocks, ... ; for details, see the manual	
Configuration control		
via dataset	Yes	
Control elements		
Number of keys	1; FUNCT button	
Mode selector switch	1	
Supply voltage		
Rated value (DC)	24 V	
permissible range, lower limit (DC)	20.4 V	
permissible range, upper limit (DC)	28.8 V	
Reverse polarity protection	Yes	

Article number	6ES7615-4DF10-0AB0	6ES7615-7DF10-0AB0
Mains buffering		
• Mains/voltage failure stored energy time	3 ms; Refers to the power supply on the CPU section	
• Repeat rate, min.	1 event every 10 s	
Input current		
Current consumption (rated value)	0.65 A; Without load on inputs/outputs, without supply via DRIVE-CLiQ/USB interface	
Current consumption, max.	13.1 A; With load	
Inrush current, max.	6 A; Rated value	
I^2t	0.62 $A^2 \cdot s$	
Power loss		
Power loss, typ.	17 W	
Memory		
Number of slots for SIMATIC memory card	1	
SIMATIC memory card required	Yes	
Work memory		
• integrated (for program)	4 Mbyte	15 Mbyte
• integrated (for data)	6 Mbyte	40 Mbyte
Load memory		
• Plug-in (SIMATIC Memory Card), required	12 Mbyte; Recommended at least when integrated drive is used	
• Plug-in (SIMATIC Memory Card), max.	32 Gbyte	
Backup		
• maintenance-free	Yes	
CPU-blocks		
Number of elements (total)	20 000; Blocks (OB, FB, FC, DB) and UDTs	
DB		
• Number range	1 ... 60 999; subdivided into: number range that can be used by the user: 1 ... 59 999, and number range of DBs created via SFC 86: 60 000 ... 60 999	
• Size, max.	6 Mbyte; For DBs with absolute addressing, the max. size is 64 KB	16 Mbyte; For DBs with absolute addressing, the max. size is 64 KB
FB		
• Number range	0 ... 65 535	
• Size, max.	1 Mbyte	
FC		
• Number range	0 ... 65 535	
• Size, max.	1 Mbyte	

Article number	6ES7615-4DF10-0AB0	6ES7615-7DF10-0AB0
OB		
• Size, max.	1 Mbyte	
• Number of free cycle OBs	100	
• Number of time alarm OBs	20	
• Number of delay alarm OBs	20	
• Number of cyclic interrupt OBs	20; with minimum OB 3x cycle of 100 µs	
• Number of process alarm OBs	50	
• Number of DPV1 alarm OBs	3	
• Number of isochronous mode OBs	3	
• Number of technology synchronous alarm OBs	2	
• Number of startup OBs	100	
• Number of asynchronous error OBs	4	
• Number of synchronous error OBs	2	
• Number of diagnostic alarm OBs	1	
Nesting depth		
• per priority class	24; Up to 8 possible for F-blocks	
Counters, timers and their retentivity		
S7 counter		
• Number	2 048	
Retentivity		
– adjustable	Yes	
IEC counter		
• Number	Any (only limited by the main memory)	
Retentivity		
– adjustable	Yes	
S7 times		
• Number	2 048	
Retentivity		
– adjustable	Yes	
IEC timer		
• Number	Any (only limited by the main memory)	
Retentivity		
– adjustable	Yes	
Data areas and their retentivity		
Retentive data area (incl. timers, counters, flags), max.	768 kbyte; In total; available retentive memory for bit memories, timers, counters, DBs, and technology data (axes): 700 KB	

Article number	6ES7615-4DF10-0AB0	6ES7615-7DF10-0AB0
Flag		
• Size, max.	16 kbyte	
• Number of clock memories	8; 8 clock memory bit, grouped into one clock memory byte	
Data blocks		
• Retentivity adjustable	Yes	
• Retentivity preset	No	
Local data		
• per priority class, max.	64 kbyte; max. 16 KB per block	
Address area		
Number of IO modules	16 384; max. number of modules / submodules	
I/O address area		
• Inputs	32 kbyte; All inputs are in the process image	
• Outputs	32 kbyte; All outputs are in the process image	
per integrated IO subsystem		
– Inputs (volume)	32 kbyte; Max. 32 KB via X150; max. 8 KB via X160 or X126	
– Outputs (volume)	32 kbyte; Max. 32 KB via X150; max. 8 KB via X160 or X126	
Subprocess images		
• Number of subprocess images, max.	32	
Hardware configuration		
Number of distributed IO systems	64; A distributed I/O system is characterized not only by the integration of distributed I/O via PROFINET or PROFIBUS, but also by the connection of I/O via AS-i master modules or links (e.g. IE/PB-Link)	
Number of DP masters		
• integrated	1	
• Via CM	Expansion via CMs / CPs (PROFIBUS, PROFINET, Ethernet) not possible; these CMs / CPs can only be operated in a central rack	
Number of IO Controllers		
• integrated	2	
• Via CM	Expansion via CMs / CPs (PROFIBUS, PROFINET, Ethernet) not possible; these CMs / CPs can only be operated in a central rack	
PtP CM		
• Number of PtP CMs	The number of connectable PtP CMs (distributed) is only limited by the number of available slots	
Time of day		
Clock		
• Type	Hardware clock	
• Backup time	6 wk; At 40 °C ambient temperature, typically	
• Deviation per day, max.	10 s; Typ.: 2.4 s	
Operating hours counter		
• Number	16	

Article number	6ES7615-4DF10-0AB0	6ES7615-7DF10-0AB0
Clock synchronization		
• supported	Yes	
• to DP, master	Yes	
• to DP, slave	Yes	
• in AS, master	Yes	
• in AS, slave	Yes	
• on Ethernet via NTP	Yes	
Digital inputs		
integrated channels (DI)	28; max. depending on parameterization	
Digital inputs, parameterizable	Yes; 12 DI, 8 DI/DQ (X122/X132, SINAMICS Integrated) + 8 DI/DQ (X142, PLC)	
Source/sink input	P-reading	
Input characteristic curve in accordance with IEC 61131, type 3	Yes	
Digital input functions, parameterizable		
• Freely usable digital input	Yes; Max. 20 (X122/X132) + max. 8 (X142)	
• Probe	Yes; Max. 8 (X122/X132) + max. 8 (X142)	
• Digital input with time stamp	Yes; Max. 8 (X142); e.g. for probes	
• Counter	Yes; Max. 8 (X142); event/cycle duration measurement	
• Digital input with oversampling	Yes; Max. 8 (X142); 32-fold oversampling	
Input voltage		
• Type of input voltage	DC	
• Rated value (DC)	24 V	
• for signal "0"	-3 to +5V	
• for signal "1"	+15 to +30 V	
• permissible voltage at input, min.	-30 V	
• permissible voltage at input, max.	30 V	
Input current		
• for signal "1", typ.	4 mA	
Input delay (for rated value of input voltage)		
• Minimum pulse width for program reactions	5 µs for X122/X132/X142 (DI/DQ as DI; for X142 with filter setting 1 µs)	
for standard inputs		
– parameterizable	No; For X122/X132	
– with "0" to "1", typ.	For X122/X132: 10 µs (DI) / 5 µs (DI/DQ as DI)	
– with "1" to "0", typ.	For X122/X132: 30 µs (DI) / 5 µs (DI/DQ as DI)	
for interrupt inputs		
– parameterizable	Yes; identical to those for technological functions	

Article number	6ES7615-4DF10-0AB0	6ES7615-7DF10-0AB0
for technological functions		
– parameterizable	Yes; For X142, additionally adjustable input filter: 1 µs / 125 µs	
– with "0" to "1", typ.	5 µs; For X142; HW delay	
– with "1" to "0", typ.	5 µs; For X142; HW delay	
Cable length		
• shielded, max.	30 m; For technological functions: Shielding of the DI recommended depending on the requirements	
• unshielded, max.	30 m	
Digital outputs		
Type of digital output	Transistor	
integrated channels (DO)	16; max. depending on parameterization	
Current-sinking	Yes; With High Speed output	
Current-sourcing	Yes; Optionally as a P-switch or high-speed push-pull switch (high-speed output)	
Digital outputs, parameterizable	Yes; 8 DI/DQ (X122/X132, SINAMICS Integrated) + 8 DI/DQ (X142, PLC)	
Short-circuit protection	Yes; electronic/thermal	
• Response threshold, typ.	X122/X132: 1.4 A / X142: 0.9 A (high-speed output: 0.7 A)	
Limitation of inductive shutdown voltage to	X122/X132: max. -60 V / X142: max. -64.5 V	
Controlling a digital input	Yes	
minimum pulse duration	2 µs; For high-speed output, single pulse	
Digital output functions, parameterizable		
• Freely usable digital output	Yes; Max. 8 (X122/X132) + max. 8 (X142)	
• Digital output with time stamp	Yes; Max. 8 (X142); e.g. for output cams	
• PWM output	Yes; Max. 8 (X142)	
– Cycle duration, parameterizable	Yes; Base frequency 1 / 2 / 4 / 8 / 16 kHz; specification of interpulse period ratio over 32-bit pattern	
– ON period, min.	0 %	
– ON period, max.	100 %	
– Resolution of the duty cycle	3.125 %	
• Digital output with oversampling	Yes; Max. 8 (X142)	
Switching capacity of the outputs		
• with resistive load, max.	0.5 A; 0.4 A for high-speed output	
• on lamp load, max.	5 W	
Load resistance range		
• lower limit	48 Ω; with 24 V DC supply	
Output voltage		
• Type of output voltage	DC	
• Rated value (DC)	24 V	
• for signal "0", max.	28.8 V	
• for signal "1", min.	20.4 V	

Article number	6ES7615-4DF10-0AB0	6ES7615-7DF10-0AB0
Output current		
• for signal "1" rated value	0.5 A; 0.4 A for high-speed output	
• for signal "1" permissible range, min.	2 mA	
• for signal "1" permissible range, max.	0.6 A; 0.48 A for high-speed output	
Output delay with resistive load		
• "0" to "1", typ.	100 µs; For X122/X132; at 48 ohm load	
• "1" to "0", typ.	150 µs; For X122/X132; at 48 ohm load	
for technological functions		
– "0" to "1", typ.	1 µs; For X142	
– "1" to "0", typ.	1 µs; For X142 as a high-speed output; 150 µs for standard output	
Parallel switching of two outputs		
• for logic links	Yes; For technological functions and high-speed outputs: No	
• for uprating	No	
• for redundant control of a load	Yes; For technological functions and high-speed outputs: No	
Switching frequency		
• with resistive load, max.	35 kHz; With High Speed output, 1 kHz with standard output	
• with inductive load, max.	2 Hz; Max. 1 J per channel	
• on lamp load, max.	11 Hz	
Total current of the outputs		
• Current per module, max.	8 A	
Cable length		
• shielded, max.	30 m	
• unshielded, max.	30 m	
Interfaces		
Number of PROFINET interfaces	3	
Number of PROFIBUS interfaces	1	
Number of USB interfaces	2; USB 3.0 (without function, no connection permissible)	
Number of DRIVE-CLiQ interfaces	4; DRIVE-CLiQ interfaces (24 V / 450 mA per interface for connecting encoders/measuring systems)	
1. Interface		
Interface types		
• RJ 45 (Ethernet)	Yes; X150	
• Number of ports	3	
• integrated switch	Yes	

Article number	6ES7615-4DF10-0AB0	6ES7615-7DF10-0AB0
Protocols		
• IP protocol	Yes; IPv4	
• PROFINET IO Controller	Yes	
• PROFINET IO Device	Yes	
• SIMATIC communication	Yes	
• Open IE communication	Yes; Optionally also encrypted	
• Web server	Yes	
• Media redundancy	Yes	
PROFINET IO Controller		
Services		
– Isochronous mode	Yes	
– Direct data exchange	Yes; Requirement: IRT and isochronous mode (MRPD optional)	
– shortest clock pulse	500 µs	250 µs
– IRT	Yes	
– PROFIenergy	Yes; per user program	
– Prioritized startup	Yes; Max. 32 PROFINET devices	
– Number of connectable IO Devices, max.	256; In total, up to 1 000 distributed I/O devices can be connected via AS-i, PROFIBUS or PROFINET	
– Of which IO devices with IRT, max.	64	
– Number of connectable IO Devices for RT, max.	256	
– of which in line, max.	256	
– Number of IO Devices that can be simultaneously activated/deactivated, max.	8; in total across all interfaces	
– Number of IO Devices per tool, max.	8	
– Updating times	The minimum value of the update time also depends on communication share set for PROFINET IO, on the number of IO devices, and on the quantity of configured user data	
– PROFINET Security Class	1	
Update time for IRT		
– for send cycle of 250 µs		250 µs to 4 ms
– for send cycle of 500 µs	500 µs to 8 ms	
– for send cycle of 1 ms	1 ms to 16 ms	
– for send cycle of 2 ms	2 ms to 32 ms	
– for send cycle of 4 ms	4 ms to 64 ms	
– With IRT and parameterization of "odd" send cycles	Update time = set "odd" send clock (any multiple of 125 µs: 375 µs, 625 µs ... 3 875 µs)	

Article number	6ES7615-4DF10-0AB0	6ES7615-7DF10-0AB0
Update time for RT		
– for send cycle of 250 µs		250 µs to 128 ms
– for send cycle of 500 µs	500 µs to 256 ms	
– for send cycle of 1 ms	1 ms to 512 ms	
– for send cycle of 2 ms	2 ms to 512 ms	
– for send cycle of 4 ms	4 ms to 512 ms	
PROFINET IO Device		
Services		
– Isochronous mode	No	
– shortest clock pulse	500 µs	250 µs
– IRT	Yes	
– PROFIenergy	Yes; per user program	
– Shared device	Yes	
– Number of IO Controllers with shared device, max.	4	
– activation/deactivation of I-devices	Yes; per user program	
– Asset management record	Yes; per user program	
– PROFINET Security Class	SNMP Configuration and DCP Read Only	
2. Interface		
Interface types		
• RJ 45 (Ethernet)	Yes; X160	
• Number of ports	1	
• integrated switch	No	
Protocols		
• IP protocol	Yes; IPv4	
• PROFINET IO Controller	Yes	
• PROFINET IO Device	Yes	
• SIMATIC communication	Yes	
• Open IE communication	Yes; Optionally also encrypted	
• Web server	Yes	
• Media redundancy	No	

Article number	6ES7615-4DF10-0AB0	6ES7615-7DF10-0AB0
PROFINET IO Controller		
Services		
– Isochronous mode	No	
– Direct data exchange	No	
– IRT	No	
– PROFIenergy	Yes; per user program	
– Prioritized startup	No	
– Number of connectable IO Devices, max.	128; In total, up to 1 000 distributed I/O devices can be connected via AS-i, PROFIBUS or PROFINET	
– Number of connectable IO Devices for RT, max.	128	
– of which in line, max.	128	
– Number of IO Devices that can be simultaneously activated/deactivated, max.	8; in total across all interfaces	
– Number of IO Devices per tool, max.	8	
– Updating times	The minimum value of the update time also depends on communication share set for PROFINET IO, on the number of IO devices, and on the quantity of configured user data	
– PROFINET Security Class	1	
Update time for RT		
– for send cycle of 1 ms	1 ms to 512 ms	
PROFINET IO Device		
Services		
– Isochronous mode	No	
– IRT	No	
– PROFIenergy	Yes; per user program	
– Prioritized startup	No	
– Shared device	Yes	
– Number of IO Controllers with shared device, max.	4	
– activation/deactivation of I-devices	Yes; per user program	
– Asset management record	Yes; per user program	
– PROFINET Security Class	SNMP Configuration and DCP Read Only	
3. Interface		
Interface types		
• RJ 45 (Ethernet)	Yes; X130	
• Number of ports	1	
• integrated switch	No	

Article number	6ES7615-4DF10-0AB0	6ES7615-7DF10-0AB0
Protocols		
• IP protocol	Yes; IPv4	
• PROFINET IO Controller	No	
• PROFINET IO Device	No	
• SIMATIC communication	Yes	
• Open IE communication	Yes; Optionally also encrypted	
• Web server	Yes	
4. Interface		
Interface types		
• RS 485	Yes; X126	
• Number of ports	1	
Protocols		
• PROFIBUS DP master	Yes	
• PROFIBUS DP slave	No	
• SIMATIC communication	Yes	
PROFIBUS DP master		
• Number of connections, max.	48; for the integrated PROFIBUS DP interface	
• Number of DP slaves, max.	125; In total, up to 1 000 distributed I/O devices can be connected via AS-i, PROFIBUS or PROFINET	
Services		
– Equidistance	Yes	
– Isochronous mode	Yes	
– Activation/deactivation of DP slaves	Yes	
Interface types		
RJ 45 (Ethernet)		
• 100 Mbps	Yes	
• 1000 Mbps	Yes; Only at the X130 interface	
• Autonegotiation	Yes	
• Autocrossing	Yes	
• Industrial Ethernet status LED	Yes; LINK and ACTIVITY	
RS 485		
• Transmission rate, max.	12 Mbit/s	
Protocols		
PROFIsafe	Yes; V2.4 / V2.6	

Article number	6ES7615-4DF10-0AB0	6ES7615-7DF10-0AB0
Number of connections		
• Number of connections, max.	384; Via integrated interfaces of the CPU	
• Number of connections reserved for ES/HMI/web	10	
• Number of connections via integrated interfaces	320	
• Number of S7 routing paths	64; in total, only 16 S7-Routing connections are supported via PROFIBUS	
Redundancy mode		
• H-Sync forwarding	Yes	
Media redundancy		
– Media redundancy	only via interface X150	
– MRP	Yes; MRP Automanager according to IEC 62439-2 Edition 2.0, MRP Manager; MRP Client	
– MRP interconnection, supported	Yes; as MRP ring node according to IEC 62439-2 Edition 3.0	
– MRPD	Yes; Requirement: IRT	
– Switchover time on line break, typ.	200 ms; For MRP, bumpless for MRPD	
– Number of stations in the ring, max.	50	
SIMATIC communication		
• PG/OP communication	Yes; encryption with TLS V1.3 pre-selected	
• S7 routing	Yes	
• Data record routing	Yes	
• S7 communication, as server	Yes	
• S7 communication, as client	Yes	
• User data per job, max.	See online help (S7 communication, user data size)	
Open IE communication		
• TCP/IP	Yes	
– Data length, max.	64 kbyte	
– several passive connections per port, supported	Yes	
• ISO-on-TCP (RFC1006)	Yes	
– Data length, max.	64 kbyte	
• UDP	Yes	
– Data length, max.	2 kbyte; 1 472 bytes for UDP broadcast	
– UDP multicast	Yes; 128 multicast circuits (of which max. 5 via X150)	

Article number	6ES7615-4DF10-0AB0	6ES7615-7DF10-0AB0
• DHCP	Yes	
• DNS	Yes	
• SNMP	Yes	
• DCP	Yes	
• LLDP	Yes	
• Encryption	Yes; Optional	
Web server		
• HTTP	Yes; Standard and user pages	
• HTTPS	Yes; Standard and user pages	
OPC UA		
• Runtime license required	Yes; "Small" license required	Yes; "Large" license required
• OPC UA Client	Yes; Data Access (registered Read/Write), Method Call	
– Application authentication	Yes	
– Security policies	Available security policies: None, Basic128Rsa15, Basic256Rsa15, Basic256Sha256	
– User authentication	"anonymous" or by user name & password	
– Number of connections, max.	40	
– Number of nodes of the client interfaces, recommended max.	5 000	
– Number of elements for one call of OPC_UA_NodeGetHandleList/OPC_UA_ReadList/OPC_UA_WriteList, max.	300	
– Number of elements for one call of OPC_UA_NameSpaceGetIndexList, max.	20	
– Number of elements for one call of OPC_UA_MethodGetHandleList, max.	100	
– Number of simultaneous calls of the client instructions for session management, per connection, max.	1	
– Number of simultaneous calls of the client instructions for data access, per connection, max.	5	
– Number of registerable nodes, max.	5 000	
– Number of registerable method calls of OPC_UA_MethodCall, max.	100	
– Number of inputs/outputs when calling OPC_UA_MethodCall, max.	20	

Article number	6ES7615-4DF10-0AB0	6ES7615-7DF10-0AB0
• OPC UA Server	Yes; Data Access (Read, Write, Subscribe), Method Call, Alarms & Condition (A&C), Custom Address Space	
– Application authentication	Yes	
– Security policies	available security policies: None, Basic128Rsa15, Basic256Rsa15, Basic256Sha256, Aes128Sha256RsaOaep, Aes256Sha256RsaPss	
– User authentication	"anonymous" or by user name & password	
– GDS support (certificate management)	Yes	
– Number of sessions, max.	64	
– Number of accessible variables, max.	200 000	
– Number of registerable nodes, max.	50 000	
– Number of subscriptions per session, max.	50	
– Sampling interval, min.	10 ms	
– Publishing interval, min.	10 ms	
– Number of server methods, max.	100	
– Number of inputs/outputs per server method, max.	20	
– Number of monitored items, recommended max.	10 000; for 1 s sampling interval and 1 s send interval	
– Number of server interfaces, max.	10 of each "Server interfaces" / "Companion specification" type and 20 of the type "Reference namespace"	
– Number of nodes for user-defined server interfaces, max.	50 000	
• Alarms and Conditions	Yes	
– Number of program alarms	400	
– Number of alarms for system diagnostics	200	
Further protocols		
• MODBUS	Yes; MODBUS TCP	
Isochronous mode		
Equidistance	Yes	
Jitter, max.	1 µs	
S7 message functions		
Number of login stations for message functions, max.	64	
number of subscriptions, max.	750	
number of tags/attributes for subscriptions, max.	50 000	
Program alarms	Yes	
Number of configurable program messages, max.	10 000; Program messages are generated by the "Program_Alarm" block, ProDiag or GRAPH	
Number of loadable program messages in RUN, max.	10 000	

Article number	6ES7615-4DF10-0AB0	6ES7615-7DF10-0AB0
Number of simultaneously active program alarms		
• Number of program alarms	4 000	
• Number of alarms for system diagnostics	1 000	
• Number of alarms for motion technology objects	480	
Test commissioning functions		
Joint commission (Team Engineering)	Yes; Parallel online access possible for up to 10 engineering systems	
Status block	Yes; Up to 16 simultaneously (in total across all ES clients)	
Single step	No	
Number of breakpoints	20	
Profiling	No	
Status/control		
• Status/control variable	Yes; without fail-safe	
• Variables	inputs/outputs, bit memories, DBs, peripheral I/Os (without fail-safe), times, counters	
• Number of variables, max.		
– of which status variables, max.	200; per job	
– of which control variables, max.	200; per job	
Forcing		
• Forcing	Yes; without fail-safe	
• Forcing, variables	peripheral inputs/outputs (without fail-safe)	
• Number of variables, max.	200	
Diagnostic buffer		
• present	Yes	
• Number of entries, max.	3 200	
– of which powerfail-proof	1 000	
Traces		
• Number of configurable Traces	8	
• Memory size per trace, max.	512 kbyte	
Interrupts/diagnostics/status information		
Diagnostics indication LED		
• RUN/STOP LED	Yes	
• ERROR LED	Yes	
• MAINT LED	Yes	
• ACT LED	Yes; For memory card access	
• RDY LED	Yes	
• COM LED	Yes	
• Connection display LINK TX/RX	Yes	

Article number	6ES7615-4DF10-0AB0	6ES7615-7DF10-0AB0
Supported technology objects		
Motion Control	Yes; Note: The number of technology objects affects the cycle time of the PLC program; selection guide via the TIA Selection Tool	
• Number of available Motion Control resources for technology objects	3 200	12 800
• Required Motion Control resources		
– per speed-controlled axis	40	
– per positioning axis	80	
– per synchronous axis	160	
– per external encoder	80	
– per output cam	20	
– per cam track	160	
– per probe	40	
• Number of available Extended Motion Control resources for technology objects	160	420
• Required Extended Motion Control resources		
– per cam (1 000 points and 50 segments)	2	
– per cam (10 000 points and 50 segments)	20	
– for each set of kinematics	30	
– per Interpreter	60	
– Per leading axis proxy	3	
• kinematics functions		
– kinematics with up to 4 interpolating axes	Yes; max. 3D + orientation	
– kinematics with 5 or more interpolating axes	No	Yes; only with S7-1500T Motion Control KinPlus, as of TIA Portal V18 / FW V3.0
– user-defined kinematics	Yes	
– SIMATIC Safe Kinematics	No	Yes; optional, SIMATIC Safe Kinematics V17 or higher
• Positioning axis		
– Number of positioning axes at motion control cycle of 4 ms (typical value)	12	55
– Number of positioning axes at motion control cycle of 8 ms (typical value)	24	110
Controller		
• PID_Compact	Yes; Universal PID controller with integrated optimization	
• PID_3Step	Yes; PID controller with integrated optimization for valves	
• PID-Temp	Yes; PID controller with integrated optimization for temperature	
Counting and measuring		
• High-speed counter	Yes	

Article number	6ES7615-4DF10-0AB0	6ES7615-7DF10-0AB0
Integrated Functions		
Counter		
• Number of counters	8; Event/cycle duration measurement	
• Counting frequency, max.	32 kHz	
Counting functions		
• Continuous counting	Yes	
Measuring functions		
Measuring range		
– Cycle duration measurement, min.	10 µs; 5 µs minimum pulse width	
– Cycle duration measurement, max.	178 s	
Accuracy		
– Cycle duration measurement	Sampling of the time period with 41.67 ns increments	
Potential separation		
Potential separation digital inputs		
• between the channels	Yes; 12 DI (X122/X132), in 2 groups of 6 DI each	
Potential separation digital outputs		
• between the channels	No; 8 DI/DQ (X122/X132) and 8 DI/DQ (X142)	
Degree and class of protection		
IP degree of protection	IP20 control cabinet installation / open type	
Standards, approvals, certificates		
CE mark	Yes	
UKCA mark	Yes	
cULus	Yes	
RCM (formerly C-TICK)	Yes	
KC approval	Yes	
EAC (formerly Gost-R)	Yes	
Suitable for safety functions	Yes; e.g. emergency stop, acknowledgment button	
Highest safety class achievable in safety mode		
• Performance level according to ISO 13849-1	PLd (PLe if exclusively F-CPU is used)	
• SIL acc. to IEC 61508	SIL 2 (SIL 3 if exclusively F-CPU is used)	
Probability of failure (for service life of 20 years and repair time of 100 hours)		
– Low demand mode: PFDavg in accordance with SIL2	< 14.00E-04	
– Low demand mode: PFDavg in accordance with SIL3	< 2.00E-05 PLd (if exclusively F-CPU is used)	
– High demand/continuous mode: PFH in accordance with SIL2	< 14.00E-09	
– High demand/continuous mode: PFH in accordance with SIL3	if exclusively F-CPU is used: < 1.00E-09 (at a site altitude of up to 3000 m); < 2.00E-09 (at a site altitude of more than 3000 m and up to 4000 m)	

Article number	6ES7615-4DF10-0AB0	6ES7615-7DF10-0AB0
Ambient conditions		
Ambient temperature during operation		
• min.	0 °C	
• max.	55 °C	
Ambient temperature during storage/transportation		
• min.	-40 °C; Long-term storage: -25 °C	
• max.	70 °C; Long-term storage: +55 °C	
Altitude during operation relating to sea level		
• Installation altitude above sea level, max.	4 000 m; as of an altitude of 2000 m, the maximum ambient air temperature is reduced by 7 °C per 1000 m; see SINAMICS documentation for SINAMICS S120 drive components	
• Ambient air temperature-barometric pressure-altitude	Permissible air pressure: 620 hPa ... 1 060 hPa	
configuration / header		
configuration / programming / header		
Programming language		
– LAD	Yes; incl. failsafe	
– FBD	Yes; incl. failsafe	
– STL	Yes	
– SCL	Yes	
– CFC	No	
– GRAPH	Yes	
Know-how protection		
• User program protection/password protection	Yes	
• Copy protection	Yes	
• Block protection	Yes	
Access protection		
• protection of confidential configuration data	Yes	
• Protection level: Write protection	Yes	
• Protection level: Read/write protection	Yes	
• Protection level: Write protection for Failsafe	Yes	
• Protection level: Complete protection	Yes	
• User administration	Yes	
programming / cycle time monitoring / header		
• lower limit	adjustable minimum cycle time	
• upper limit	adjustable maximum cycle time	

Article number	6ES7615-4DF10-0AB0	6ES7615-7DF10-0AB0
Dimensions		
Width	50 mm	
Height	300 mm	
Depth	226 mm; 270 mm with spacer (included in scope of supply)	
Weights		
Weight, approx.	2 400 g	
Other		
Note:	The SIMATIC Drive Controller deviates from the usual SIMATIC S7-1500 ambient conditions and specifications as well as the available approvals and certificates because of the drive design. For details, see the SIMATIC Drive Controller device and system manual. Operation is without fan.	

Dimension drawing

A

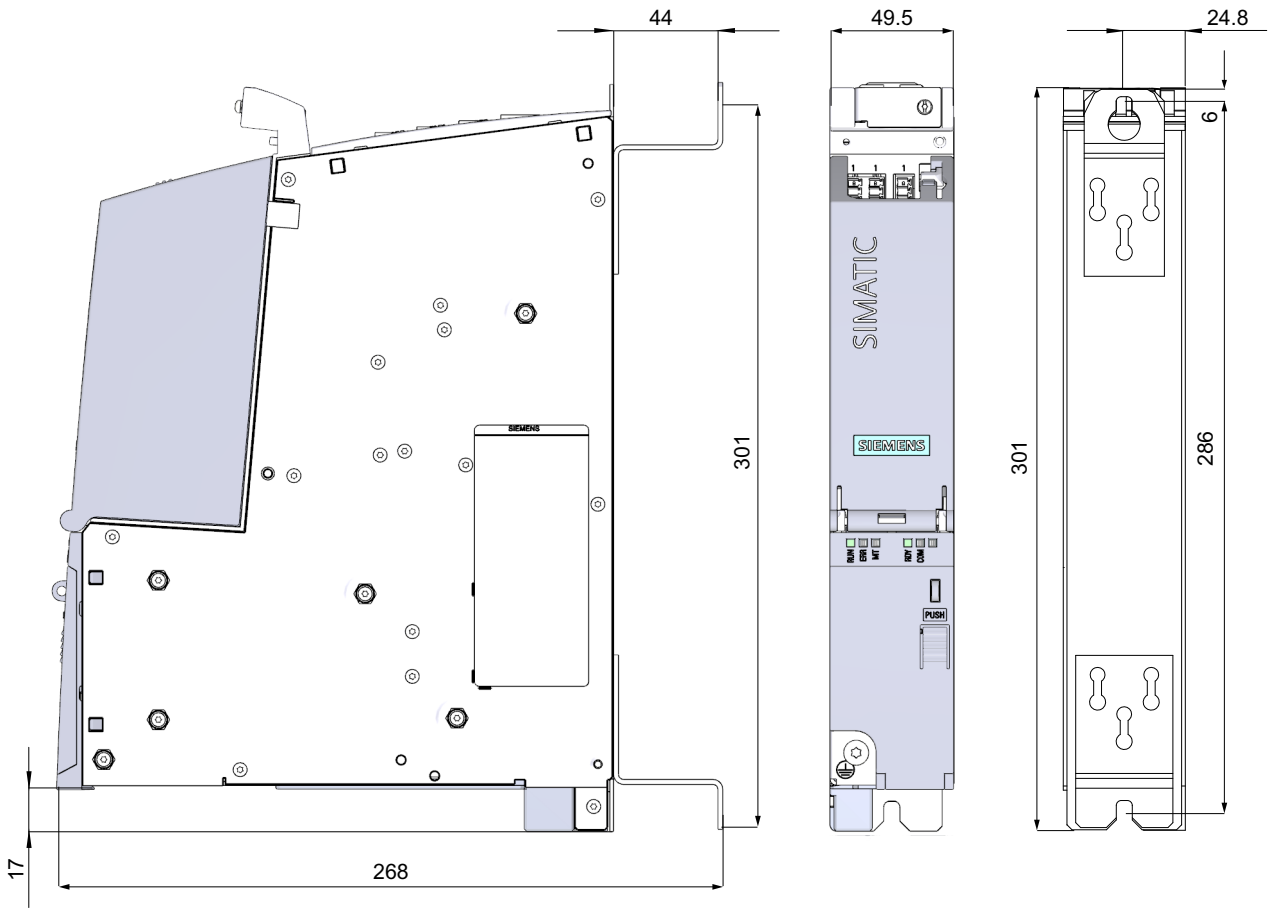

Figure A-1 Dimension drawing of SIMATIC Drive Controller

NOTE

If you install more than one SIMATIC Drive Controller or SINAMICS S120 CU320-2 side-by-side, use a horizontal spacing of 50 mm for the drilled holes to compensate for the tolerances.