SIEMENS

SIMATIC

ET 200SP
CPU 1512SP-1 PN
(6ES7512-1DM03-0AB0)

Equipment Manual

Introduction 1

Industrial cybersecurity 2

Product overview 3

Wiring 4

Interrupts, error messages, diagnostics and system alarms 5

Technical specifications 6

Dimension drawing A

11/2024
A5E33591411-AG

Legal information

Warning notice system

This manual contains notices you have to observe in order to ensure your personal safety, as well as to prevent damage to property. The notices referring to your personal safety are highlighted in the manual by a safety alert symbol, notices referring only to property damage have no safety alert symbol. These notices shown below are graded according to the degree of danger.

⚠ DANGER
indicates that death or severe personal injury **will** result if proper precautions are not taken.

⚠ WARNING
indicates that death or severe personal injury **may** result if proper precautions are not taken.

⚠ CAUTION
indicates that minor personal injury can result if proper precautions are not taken.

NOTICE
indicates that property damage can result if proper precautions are not taken.

If more than one degree of danger is present, the warning notice representing the highest degree of danger will be used. A notice warning of injury to persons with a safety alert symbol may also include a warning relating to property damage.

Qualified Personnel

The product/system described in this documentation may be operated only by **personnel qualified** for the specific task in accordance with the relevant documentation, in particular its warning notices and safety instructions. Qualified personnel are those who, based on their training and experience, are capable of identifying risks and avoiding potential hazards when working with these products/systems.

Proper use of Siemens products

Note the following:

⚠ WARNING
Siemens products may only be used for the applications described in the catalog and in the relevant technical documentation. If products and components from other manufacturers are used, these must be recommended or approved by Siemens. Proper transport, storage, installation, assembly, commissioning, operation and maintenance are required to ensure that the products operate safely and without any problems. The permissible ambient conditions must be complied with. The information in the relevant documentation must be observed.

Trademarks

All names identified by ® are registered trademarks of Siemens Aktiengesellschaft. The remaining trademarks in this publication may be trademarks whose use by third parties for their own purposes could violate the rights of the owner.

Disclaimer of Liability

We have reviewed the contents of this publication to ensure consistency with the hardware and software described. Since variance cannot be precluded entirely, we cannot guarantee full consistency. However, the information in this publication is reviewed regularly and any necessary corrections are included in subsequent editions.

Siemens Aktiengesellschaft
Digital Industries
Postfach 48 48
90026 NÜRNBERG
GERMANY

A5E33591411-AG
Ⓟ 10/2024 Subject to change

Copyright © Siemens 2014 - 2024.
All rights reserved

Table of contents

1 Introduction 4

1.1 Introduction 4

1.2 ET 200SP Documentation Guide 5

1.2.1 Information classes ET 200SP 5

1.2.2 SIMATIC Technical Documentation 7

2 Industrial cybersecurity 10

2.1 Introduction to industrial cybersecurity 10

2.2 Cybersecurity information 10

2.3 Cybersecurity-relevant information 11

3 Product overview 13

3.1 New functions 13

3.2 Hardware properties 17

3.3 Firmware functions 19

3.4 Operating and display elements 23

3.4.1 Front view of the module 23

3.5 Mode switch 24

4 Wiring 25

5 Interrupts, error messages, diagnostics and system alarms 29

5.1 Status and error display of the CPU 29

6 Technical specifications 32

A Dimension drawing 45

Introduction 1

1.1 Introduction

Purpose of the documentation

This Equipment Manual supplements the ET 200SP Distributed I/O System (https://support.automation.siemens.com/WW/view/en/58649293) System Manual as well as the Function Manuals. This Equipment Manual contains a concise description of the module-specific information. The system-related functions are described in the System Manual. All system-spanning functions are described in the Function Manuals.

The information provided in this Equipment Manual and the System Manual allows you to commission the CPU.

Conventions

STEP 7: In this documentation, "STEP 7" is used as a synonym for all versions of the configuration and programming software "STEP 7 (TIA Portal)".

Please also observe the notes marked as follows:

NOTE

A note contains important information on the product described in the documentation, on the handling of the product or on the section of the documentation to which particular attention should be paid.

Recycling and disposal

For environmentally friendly recycling and disposal of your old equipment, contact a certified electronic waste disposal company and dispose of the equipment according to the applicable regulations in your country.

Industry Mall

The Industry Mall is the catalog and order system of Siemens AG for automation and drive solutions on the basis of Totally Integrated Automation (TIA) and Totally Integrated Power (TIP).

You can find catalogs for all automation and drive products on the Internet (https://mall.industry.siemens.com).

ID-Link for the digital nameplate

The ID-Link is a globally unique identifier according to IEC 61406-1, which you will find as a QR code on your product in the future.

The figure shows an example of an ID-Link for the CPU 1512SP-1 PN.

You can recognize the ID-Link by the frame with a black corner at the bottom right. The ID-Link takes you to the digital nameplate of your product.

Scan the QR code on the product or on the packaging label with a smartphone camera, barcode scanner, or reader app. Call the ID-Link.

In the digital nameplate, you will find product data, manuals, declarations of conformity, certificates, and other helpful information about your product.

1.2 ET 200SP Documentation Guide

1.2.1 Information classes ET 200SP

The documentation for the SIMATIC ET 200SP distributed I/O system is arranged into three areas.

This arrangement enables you to access the specific content you require.

You can download the documentation free of charge from the Internet (https://support.industry.siemens.com/cs/ww/en/view/109742709).

Basic information

The System Manual describes in detail the configuration, installation, wiring and commissioning of the SIMATIC ET 200SP distributed I/O system.

The STEP 7 online help supports you in the configuration and programming.

Examples:

- ET 200SP System Manual
- System Manual ET 200SP HA/ET 200SP modules for devices used in a hazardous area
- Online help TIA Portal

Device information

Equipment manuals contain a compact description of the module-specific information, such as properties, wiring diagrams, characteristics and technical specifications.

Examples:

- Equipment Manuals CPUs
- Equipment Manuals Interface Modules
- Equipment Manuals Digital Modules
- Equipment Manuals Analog Modules
- Equipment Manuals Motor Starter
- BaseUnits Equipment Manuals
- Equipment Manual Server Module
- Equipment Manuals Communications Modules
- Equipment Manuals Technology Modules

General information

The function manuals contain detailed descriptions on general topics relating to the SIMATIC ET 200SP distributed I/O system.

Examples:

- Function Manual ET 200AL/ET 200SP Mixed Configuration
- Function Manual Diagnostics
- Function Manual Communication
- PROFINET Function Manual
- PROFIBUS Function Manual
- Function Manual Designing Interference-free Controllers
- MultiFieldbus Function Manual

Product Information

Changes and supplements to the manuals are documented in a Product Information. The Product Information takes precedence over the device and system manuals.

You can find the latest Product Information on the ET 200SP distributed I/O system on the Internet. (https://support.industry.siemens.com/cs/de/en/view/73021864)

Manual Collection ET 200SP

The Manual Collection contains the complete documentation on the SIMATIC ET 200SP distributed I/O system gathered together in one file.

You can find the Manual Collection on the Internet.
(https://support.industry.siemens.com/cs/cn/en/view/84133942)

Manual Collection fail-safe modules

The Manual Collection contains the complete documentation on the fail-safe SIMATIC modules, gathered together in one file.

You can find the Manual Collection on the Internet.
(https://support.industry.siemens.com/cs/ww/en/view/109806400)

1.2.2 SIMATIC Technical Documentation

Additional SIMATIC documents will complete your information. You can find these documents and their use at the following links and QR codes.

The Industry Online Support gives you the option to get information on all topics. Application examples support you in solving your automation tasks.

Overview of the SIMATIC Technical Documentation

Here you will find an overview of the SIMATIC documentation available in Siemens Industry Online Support:

Industry Online Support International
(https://support.industry.siemens.com/cs/ww/en/view/109742705)

Watch this short video to find out where you can find the overview directly in Siemens Industry Online Support and how to use Siemens Industry Online Support on your mobile device:

Quick introduction to the technical documentation of automation products per video (https://support.industry.siemens.com/cs/us/en/view/109780491)

YouTube video: Siemens Automation Products - Technical Documentation at a Glance (https://youtu.be/TwLSxxRQQsA)

Retention of the documentation

Retain the documentation for later use.

For documentation provided in digital form:

1. Download the associated documentation after receiving your product and before initial installation/commissioning. Use the following download options:
   - Industry Online Support International: (https://support.industry.siemens.com)

     The article number is used to assign the documentation to the product. The article number is specified on the product and on the packaging label. Products with new, non-compatible functions are provided with a new article number and documentation.
   - ID link:

     Your product may have an ID link. The ID link is a QR code with a frame and a black frame corner at the bottom right. The ID link takes you to the digital nameplate of your product. Scan the QR code on the product or on the packaging label with a smartphone camera, barcode scanner, or reader app. Call up the ID link.
2. Retain this version of the documentation.

Updating the documentation

The documentation of the product is updated in digital form. In particular in the case of function extensions, the new performance features are provided in an updated version.

1. Download the current version as described above via the Industry Online Support or the ID link.
2. Also retain this version of the documentation.

mySupport

With "mySupport" you can get the most out of your Industry Online Support.

Registration	You must register once to use the full functionality of "mySupport". After registration, you can create filters, favorites and tabs in your personal workspace.
Support requests	Your data is already filled out in support requests, and you can get an overview of your current requests at any time.
Documentation	In the Documentation area you can build your personal library.
Favorites	You can use the "Add to mySupport favorites" to flag especially interesting or frequently needed content. Under "Favorites", you will find a list of your flagged entries.
Recently viewed articles	The most recently viewed pages in mySupport are available under "Recently viewed articles".
CAx data	The CAx data area gives you access to the latest product data for your CAx or CAe system. You configure your own download package with a few clicks: • Product images, 2D dimension drawings, 3D models, internal circuit diagrams, EPLAN macro files • Manuals, characteristics, operating manuals, certificates • Product master data

You can find "mySupport" on the Internet. (https://support.industry.siemens.com/My/ww/en)

Application examples

The application examples support you with various tools and examples for solving your automation tasks. Solutions are shown in interplay with multiple components in the system - separated from the focus on individual products.

You can find the application examples on the Internet.
(https://support.industry.siemens.com/cs/ww/en/ps/ae)

Industrial cybersecurity 2

2.1 Introduction to industrial cybersecurity

Due to the digitalization and increasing networking of machines and industrial plants, the risk of cyber attacks is also growing. Appropriate protective measures are therefore mandatory, particularly in the case of critical infrastructure facilities.

Refer to the System Manual (https://support.industry.siemens.com/cs/us/en/view/58649293) for general information and measures regarding industrial cybersecurity.

This section provides an overview of security-related information pertaining to your SIEMENS device.

NOTE

Security-relevant changes to software or devices are documented in the section New functions.

2.2 Cybersecurity information

Siemens provides products and solutions with industrial cybersecurity functions that support the secure operation of plants, systems, machines and networks.

In order to protect plants, systems, machines and networks against cyber threats, it is necessary to implement – and continuously maintain – a holistic, state-of-the-art industrial cybersecurity concept. Siemens' products and solutions constitute one element of such a concept.

Customers are responsible for preventing unauthorized access to their plants, systems, machines and networks. Such systems, machines and components should only be connected to an enterprise network or the internet if and to the extent such a connection is necessary and only when appropriate security measures (e.g. firewalls and/or network segmentation) are in place.

For additional information on industrial cybersecurity measures that may be implemented, please visit
https://www.siemens.com/cybersecurity-industry.

Siemens' products and solutions undergo continuous development to make them more secure. Siemens strongly recommends that product updates are applied as soon as they are available and that the latest product versions are used. Use of product versions that are no longer supported, and failure to apply the latest updates may increase customer's exposure to cyber threats.

To stay informed about product updates, subscribe to the Siemens Industrial Cybersecurity RSS Feed under
https://new.siemens.com/cert.

2.3 Cybersecurity-relevant information

Note all cybersecurity-relevant information.

Topics with cybersecurity-relevant information	Reference
Operational application environment and security assumptions	
Requirements for the operational application environment of the system and security assumptions	This section is found in the System Manual (https://support.industry.siemens.com/cs/us/en/view/58649293).
Security properties of the product	
Access protection Physical protection: • You can protect the CPU against unauthorized access by locking the front flap. Password protection You can also protect the CPU with a password. Password categories: • Password to protect confidential configuration data • Passwords in the context of user management (UMAC) • Password for display	Information on locking and on password protection can be found in this Equipment Manual in the section Operator controls and display elements (Page 23). Also note the information on the topic of access protection in the Protection section of the System Manual (https://support.industry.siemens.com/cs/us/en/view/58649293).
Integrated protection functions • The CPUs have integrated protection functions.	For information on the protection functions, refer to the "Overview of protection functions" section of the System Manual (https://support.industry.siemens.com/cs/us/en/view/58649293).
PROFINET Security Class 1 • The device supports PROFINET Security Class 1. • With the introduction of PROFINET Security Class 1, additional security settings have been integrated into the PROFINET communication.	Detailed information about PROFINET Security Class 1 and the additional security settings can be found in the PROFINET with STEP 7 Function Manual (https://support.industry.siemens.com/cs/us/en/view/49948856).
Reading out and verifying signatures	You can find detailed information on reading and verifying signatures in the STEP 7 online help (TIA Portal).
Supported Ethernet services	Information about supported services can be found in the section Technical specifications (Page 32). You can find detailed information on the supported Ethernet services in the Communication Function Manual (https://support.industry.siemens.com/cs/us/en/view/59192925).
Interfaces, ports, protocols and services	
Information on the following is security related: • Communications layer and communication role • Default states • Enabling/disabling ports and services	You can find detailed information on these topics in the Communication Function Manual (https://support.industry.siemens.com/cs/us/en/view/59192925).
Secure operation	
Corrective measures for known risks	Corrective measures for known risks are announced on the Siemens ProductCERT (https://siemens.com/productcert) Web page. For more information on SIEMENS ProductCERT, refer to the System Manual (https://support.industry.siemens.com/cs/us/en/view/58649293).

Topics with cybersecurity-relevant information	Reference
Security checks	Application-specific security measures such as cyclic checks of the configuration via checksums are described in the System Manual (https://support.industry.siemens.com/cs/us/en/view/58649293).
Recording Security events	Information on recording security events can be found in the "Safe operation of CPUs" section of the System Manual (https://support.industry.siemens.com/cs/us/en/view/58649293).
Secure decommissioning Products that contain security-relevant data must be securely decommissioned before disposal or resale.	Information on secure decommissioning can be found in the "Safe operation of the system" section of the System Manual (https://support.industry.siemens.com/cs/us/en/view/58649293).

Product overview

3

3.1 New functions

In this chapter, you will find an overview of the most important new firmware features of the CPU compared to the predecessor CPU (V3.1).

New CPU features in firmware version V4.0

New functions	Applications	Customer benefits
Integrated safety		
Retentive memory area for syslog messages	The CPUs store syslog messages retentively as of FW version 4.0.	As a result, events in the syslog memory are retained even after the CPU is restarted.
Central user management	System-wide, central management of users and user groups outside the TIA Portal via the UMC server.	User management for comprehensive automation solutions with multiple projects, users, and user groups. Users and user groups can work in all projects in which they are activated and for which they have been assigned the appropriate rights. During operation, users can be added to or removed from a group or their passwords can be changed. These changes have no effect on the CPU configuration. It is not necessary to restart the CPU.
Programming of the CPU		
SIMATIC Controller Profiling	With SIMATIC Controller Profiling, you can analyze and evaluate the runtime behavior of your user program on a SIMATIC CPU.	With the new "Profiling" instruction, you can start or stop the profiling of a CPU from FW version V4.0. When starting the profiling, specify the configuration with which the profiling data is to be recorded.
Increasing the nesting depth	For CPUs as of FW version V4.0, the nesting depth has been extended for the following elements: • PLC data types • Tags of the STRUCT data type • Tags of the ARRAY of STRUCT/ARRAY of UDT data type	Previously, the maximum nesting depth was eight elements. You can now nest up to 26 elements inside each other. An ARRAY of STRUCT/UDT requires three hierarchy levels in each case. If you use these data types, the maximum nesting depth is reduced accordingly.
Communication of the CPU		
New function for OPC UA	Enables cross-vendor communication.	You can find more information in the Communication Function Manual (https://support.industry.siemens.com/cs/ww/en/view/59192925).

New functions	Applications	Customer benefits
Configuring SNMP and DCP	As of STEP 7 V20, you can centrally configure the SNMP settings for an entire PROFINET IO system. IO devices that support the SNMP automatically synchronize the SNMP settings of the PROFINET interface of your higher-lever IO controller. If IO controllers and IO devices support the DCP protocol, the write-protected mode is activated by default for DCP.	Easier configuration of the SNMP settings through central default at the CPU for the connected PROFINET IO system.
Web server of the CPU		
System web pages	Introduction of the system web pages with new design and functionality for: • Overview • Diagnostics • User program • Messages and DataLogs • Maintenance	• User interface with modern design • Intuitive and convenient operation • Flexible change management • Interaction with user-defined web applications with reference to Web API sessions
New Web API methods	The Web API has been expanded to include the following functions: • Reading out basic information from the CPU • Reading out API session information • Reading out technology objects and their values • Configuring the HTTP response header • Additional options for configuring web applications	The extended functional scope of the Web API offers more accessibility options. Furthermore, access to the web server via HMI Unified Panels is extended through the HTTP header configurations.
Technology functions of the CPU		
Axis functions	Defining the motion transition	Extended functional scope
	Stopping the basic motion	
Trace functionality of the CPU		
Named value data types in traces	"Named values" are values that are assigned a unique name. In the TIA Portal, you declare named values within "named value data types". They contain a set of values to which a unique set of names is assigned.	Named values are easily referenced throughout the program and enhance the readability and maintainability of the program. This makes it easy to monitor/analyze the named value data types in the trace, for example.
Recording as a binary file for long-term traces and long-term project traces	Recording as binary file instead of a CSV file and saving in a DAT file.	This makes it possible to monitor/analyze long-term traces and long-term project traces directly in the TIA Portal.
Acquiring events from technology objects in the trace recording	Detecting events in the trace recording which occur at a motion control technology object as of V9.0 during recording.	Monitoring/analyzing of the correct sequence and parameterization of motion control jobs in complex applications.
Cross-project trace	Recording of values from multiple projects with a PN/PN coupler.	Monitoring/analyzing of signals and events from multiple projects.

New functions of the CPU in firmware version V3.1

New functions	Applications	Customer benefits
Integrated safety		
Syslog messages	The CPU stores syslog messages in a local cache (temporary memory). The messages can be forwarded to a syslog server.	The syslog server saves all syslog messages from its connected devices. The messages can be displayed on the interface of the server and potential security risks can be identified.
Local user management	As of TIA Portal version V19 and FW version V3.1, the CPUs feature improved management of users, roles, and CPU function rights (User Management & Access Control, UMAC). Starting with the above mentioned version, you can manage all project users with their rights (e.g. access rights) for all CPUs in the project. You can do this in the editor for users and roles in the TIA Portal.	Project users can be managed via the TIA Portal with their rights (for example, access rights) for all CPUs in the project in the editor for users and roles.
Communication of the CPU		
Implementation of PROFINET Security Class 1	As of V19, STEP 7 offers extended configuration options for the SNMP and DCP protocols in order to meet the requirements for PROFINET Security Class 1.	Additional protection of communication within your PROFINET network.
Project-internal shared device/shared I-device	As of STEP7 V19, a shared device/shared I-device together with a maximum of two IO controllers can be created in a single project. Previously, the second IO controller required its own project.	Simpler configuration.
Handling timeouts while exchanging data	When network loads are high, timeouts may occur in PROFINET IO devices during data record communication. Previously, the PROFINET IO communication was reduced by the CPU in this case. As of STEP 7 V19 and FW version V3.1, you can configure the behavior of the respective PROFINET interface.	PROFINET IO communication is maintained even under high grid loads
Web server of the CPU		
New Web API methods	Many new API methods extend your access options to the CPU via the Web API.	Additional applications for the web server
Technology functions of the CPU		
Axis functions	Measuring gearbox for positioning/synchronous axis	Advanced configuration options
	Torque feedforward control for positioning/synchronous axis: The torque feedforward control of the CPU controls the torque required to accelerate the axis, taking into account the motion profile.	Complex motion sequences can be executed faster and more precisely. This leads to a reduction of following errors in acceleration phases.
	Three drive stop modes can be configured for the alarm response "Remove enable".	You can choose between a deceleration ramp, coasting down, and rapid stop.
	Dynamic filter with floating mean value	The new "Floating mean value filter" mode is available for the dynamic filter.

New functions	Applications	Customer benefits
Axis functions	Standstill signal on external encoder	The standstill signal is also available for external encoders. The standstill signal is output when the encoder values are within the defined standstill window.
	Virtual axis	The axis is operated in the virtual mode with improved runtime behavior. The new mode replaces the existing behavior of the virtual axis.
Measuring input functions	Monitoring measuring input	With the "Measuring via monitoring" measuring input type, the measuring input can capture the measured signal of another configured measuring input.
	Cyclic measuring for central measuring input	Cyclic measuring possible without additional technology module
Trace functionality of the CPU		
Live monitoring for the long-term trace	With live monitoring for the long-term trace, you can: • Display and analyze values directly in the graph during recording • Use superimposed measurements for the long-term trace • Synchronize time bases	Improved display and analysis of long-term traces
Long-term project trace	With the long-term project trace, you can record signals of different S7-1500 CPUs simultaneously. The CPUs must be configured in a network. The recording is stored on a drive that you have configured.	Extended functional scope

Reference

You can find an overview of all new functions, improvements and revisions in the respective firmware versions on the Internet (https://support.industry.siemens.com/cs/ww/en/view/109478459).

3.2 Hardware properties

Article number

6ES7512-1DM03-0AB0

View of the module

The figure below shows the CPU 1512SP-1PN.

Figure 3-1 CPU 1512SP-1 PN

Properties

The CPU 1512SP-1 PN has the following technical properties:

Property	Description	Additional information
Supply voltage	The 24 V DC supply voltage is fed via a 4-pin connection plug located at the bottom left on the front panel of the CPU.	• Section Connecting (Page 25) • ET 200SP System Manual (https://support.industry.siemens.com/cs/ww/en/view/58649-293)
Standalone CPU	You can also use the CPU 1512SP-1 PN in the distributed I/O system ET 200SP as a "central system" without a higher-level controller.	
PROFINET IO		

Property	Description	Additional information
PROFINET interface (X1)	The interface has an integrated 3-port switch. Port 1 and port 2 are located on the optionally pluggable BusAdapter. Port 3 is integrated in the housing of the CPU. You can connect the PROFINET IO to the CPU via the BusAdapter. You will find information on the BusAdapters supported by the CPU in the Connecting (Page 25) section. In addition to PROFINET basic functionality, the interface also supports PROFINET IO RT (real-time) and IRT (isochronous real-time). PROFINET IO communication or real-time settings can be configured. The basic functionality of PROFINET supports HMI communication, communication with the configuration system, communication with a higher-level network (backbone, router, Internet) and communication with another machine or automation cell. Port 1 and port 2 can also be used as ring ports for the configuration of redundant ring structures in Ethernet.	• PROFINET Function Manual (https://support.industry.siemens.com/cs/ww/en/view/49948-856) • ET 200SP System Manual (https://support.industry.siemens.com/cs/ww/en/view/58649-293)
Operation of the CPU as • IO controller • I-device	• **IO controller:** As an IO controller, the CPU addresses the connected IO devices • **I-device:** As an I-device (intelligent IO device), the CPU is assigned to a higher-level IO controller and is used in the process as an intelligent pre-processing unit of sub-processes	
PROFIBUS DP		
DP master	To use the ET 200SP CPU as a DP master, you need the CPU and the optional communication module CM DP (PROFIBUS interface X2). When used as a DP master, the ET 200SP CPU exchanges data with the connected DP devices via PROFIBUS DP.	• PROFIBUS Function Manual (https://support.industry.siemens.com/cs/ww/en/view/59193-579) • Communication module CM DP Equipment Manual (https://support.industry.siemens.com/cs/ww/en/view/90156-526)
Intelligent DP device (I-DP device)	To use the ET 200SP CPU as an intelligent DP device (I-DP device), you need the CPU and the optional CM DP communications module (PROFIBUS interface X2). As an intelligent DP device, the ET 200SP CPU is connected via PROFIBUS DP to a higher-level DP master and exchanges data with it.	

Accessories

You can find information on the topic of "Accessories/spare parts" in the Distributed I/O system ET 200SP (https://support.industry.siemens.com/cs/ww/en/view/58649293) System Manual.

NOTE

The CPU is delivered without a BusAdapter. You can find an overview of supported BusAdapters in the "Connecting (Page 25)" section. You can find the article numbers of the BusAdapters in the ET 200SP BusAdapter (https://support.industry.siemens.com/cs/us/en/view/109751716) Equipment Manual.

NOTE

You must provide covers for unused BusAdapter interfaces. You can find the article numbers of the covers in the ET 200SP Distributed I/O System (https://support.industry.siemens.com/cs/ww/en/view/58649293) System Manual, in the "Accessories/spare parts" section.

3.3 Firmware functions

Functions

The CPU supports the following functions:

Function	Description	Additional information
Integrated system diagnostics	The system automatically generates the messages for the system diagnostics and outputs these messages via a programming device/PC, HMI device, the web server or the integrated display. System diagnostics information is also available when the CPU is in STOP mode.	Diagnostics Function Manual (https://support.industry.siemens.com/cs/us/en/view/59192926)
Integrated web server	The web server lets you access the CPU data by means of a network. Evaluations, diagnostics, and modifications are thus possible over long distances. Monitoring and evaluation is possible without STEP 7; all you need is a web browser. Make sure that you take appropriate measures (e.g. limiting network access, using firewalls) to protect the CPU from being compromised.	• Web server Function Manual (https://support.industry.siemens.com/cs/ww/en/view/59193560) • Security with SIMATIC S7 controllers System Manual (https://support.industry.siemens.com/cs/ww/en/view/90885010)
Integrated trace functionality	Trace functionality supports you in troubleshooting and/or optimizing the user program. You can record device tags and evaluate the recordings with the trace and logic analyzer function. Tags are, for example, drive parameters or system and user tags of a CPU. The device saves the recordings. You can read out and permanently save the recordings with the configuration system (ES), if required. The trace and logic analyzer function is therefore suitable for monitoring highly dynamic processes. The trace record can also be displayed through the web server.	Using the trace and logic analyzer function Function Manual (https://support.industry.siemens.com/cs/ww/en/view/64897128)

Function	Description	Additional information
	With the project trace, you can record the variables of multiple devices within a project, for example, a controller and a drive. With the long-term trace, you can record up to 64 different tags for each cycle in a .csv file over a long period (e.g. hours, days).	
OPC UA	With OPC UA, you can exchange data via an open and manufacturer-neutral communication protocol. The CPU can act as OPC UA server. The CPU acting as the OPC UA server can communicate with OPC UA clients. In turn, as an OPC UA client, the CPU can access an OPC UA server, allow the OPC UA server to run methods and read out information from the OPC UA server. The OPC UA Companion Specification allows methods to be specified uniformly and independently of the manufacturer. Using these specified methods, you can easily integrate devices from various manufacturers into your plants and production processes.	Communication Function Manual (https://support.industry.siemens.com/cs/ww/en/view/59192925)
Configuration control	You can use configuration control to operate different real hardware configurations with a configured maximum configuration of the hardware. Especially in series machine manufacturing, this means you have the option of operating/configuring different configuration variants of a machine with a single project.	ET 200SP System Manual (https://support.industry.siemens.com/cs/ww/en/view/58649293)
PROFINET IO		
RT (real time)	RT prioritizes PROFINET IO telegrams over standard telegrams. This ensures the required determinism in the automation technology. In this process the data is transferred via prioritized Ethernet telegrams.	PROFINET Function Manual (https://support.industry.siemens.com/cs/ww/en/view/49948856)
IRT (isochronous real time)	A reserved bandwidth within the send clock is available for IRT data. The reserved bandwidth ensures that the IRT data can be transmitted in time-synchronized intervals, unaffected by other high network loading (e.g. TCP/IP communication or additional real time communication). Update times with maximum determinism can be realized through IRT. Isochronous applications are possible with IRT.	
Isochronous mode	The Isochronous mode system property acquires measured values and process data and processes the signals in a fixed system clock. Isochronous mode thus contributes to high control quality and hence to greater manufacturing precision. Isochronous mode reduces possible fluctuations of the process reaction times to a minimum. Time-assured processing makes higher machine cycles possible.	
MRP (Media Redundancy Protocol)	It is possible to establish redundant networks via the Media Redundancy Protocol. Redundant transmission links (ring topology) ensure that an alternative communication path is made available if a transmission link fails. The PROFINET devices that are part of this redundant network form an MRP domain. RT operation is possible with the use of MRP.	

Function	Description	Additional information
MRPD (Media Redundancy with Planned Duplication)	The advantage of the MRP extension MRPD is that, in the event of a failure of a device or a line in the ring, all other devices continue to be supplied with IO data without interruption and with short update times. MRPD is based on IRT and MRP. To realize media redundancy with short update times, the PROFINET devices participating in the ring send their data in both directions. The devices receive this data at both ring ports so that there is no reconfiguration time.	PROFINET Function Manual (https://support.industry.siemens.com/cs/ww/en/view/49948856)
Shared device	The "Shared device" function allows you to divide the modules or submodules of an IO device up among different IO controllers. Numerous IO controllers are often used in larger or widely distributed systems. Without the "Shared device" function, each I/O module of an IO device is assigned to the same IO controller. Therefore, if sensors in close proximity to each other need to provide data to different IO controllers, multiple IO devices are required. The "Shared device" function allows the modules or submodules of an IO device to be divided up among different IO controllers, thus allowing flexible automation concepts. You can, for example, combine I/O modules that are physically close to each other in one IO device.	
PROFIenergy	PROFIenergy is a PROFINET-based data interface for switching off consumers centrally and with full coordination during pause times regardless of the manufacturer or device type. The goal is that the process is only provided with the energy that is absolutely required. The majority of the energy is saved by the process; the PROFINET device itself only contributes a few watts of savings potential.	
Integrated technology		
Motion Control	The CPUs support the S7-1500 Motion Control functions via the technology objects speed axes, positioning axes, synchronized axes, external encoders, cams, cam tracks, and measuring inputs. • Speed-controlled axis for controlling a drive with speed specification • Positioning axis for position-controlled positioning of a drive • Synchronous axis to interconnect with a master value. The axis is synchronized to the master axis position. • External encoder for detecting the actual position of an encoder and its use as a master value for synchronous operation • Cams, cam track for position-dependent generation of switching signals • Measuring input for fast, accurate, and event-dependent sensing of actual positions You program the technology objects with Motion Control instructions according to PLCopen.	Motion Control topic page (https://support.industry.siemens.com/cs/ww/en/view/109751049)

Function	Description	Additional information
Integrated closed-loop control functionality	• PID Compact (continuous PID controller) • PID 3Step (step controller for integrating actuators) • PID Temp (temperature controller for heating and cooling with two separate actuators)	PID control Function Manual (https://support.industry.siemens.com/cs/ww/en/view/108210036)
Integrated safety		
Know-how protection	The know-how protection protects user blocks against unauthorized access and modifications.	ET 200SP System Manual (https://support.industry.siemens.com/cs/ww/en/view/58649293)
Copy protection	Copy protection links user blocks to the serial number of the SIMATIC Memory Card or to the serial number of the CPU. User programs cannot run without the corresponding SIMATIC Memory Card or CPU.	
Local user management (as of FW version V3.1)	Improved management of users, roles, and CPU function rights (User Management & Access Control, UMAC). You can used the local user management in the editor to manage all project users along with their rights (e.g. access rights) for users and roles of the project in the TIA Portal.	
Access protection (up to FW version V3.0)	You can use authorization levels to assign separate rights to different user groups.	
Integrity protection	The CPUs feature an integrity protection function by default. This helps to detect any manipulation of the engineering data on the SIMATIC Memory Card or during data transfer between the TIA Portal and the CPU, and to check communication from a SIMATIC HMI system to the CPU for possible manipulation of engineering data. The user receives a corresponding message about manipulation of engineering data detected by the integrity protection.	
Password provider	As an alternative to manual password input you can connect a password provider to STEP 7. A password provider offers the following advantages: • Convenient handling of passwords. STEP 7 reads the password automatically for the blocks. This saves you time. • Optimum block protection because the users do not know the password itself.	

3.4 Operating and display elements

3.4.1 Front view of the module

The figure shows the CPU 1512SP-1 PN.

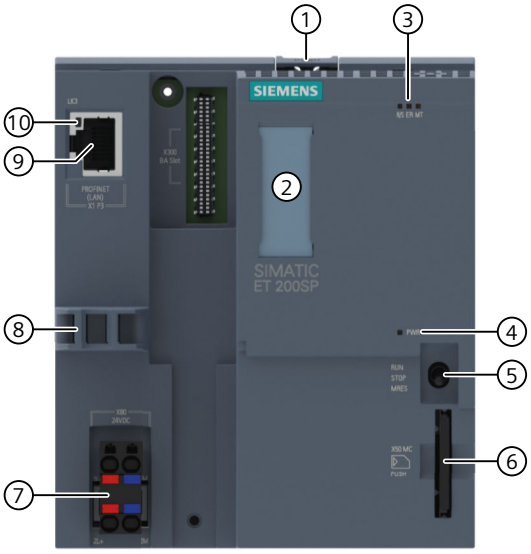

① Mounting rail release
② Labeling strips
③ LEDs for status and error displays
④ LED for display of the supply voltage
⑤ Mode switch
⑥ Slot for the SIMATIC Memory Card
⑦ Connection for supply voltage (included in scope of supply)
⑧ Cable support and attachment for port P3 of the PROFINET interface
⑨ Port P3 of the PROFINET interface X1
⑩ LEDs for status displays of the PROFINET interface X1

Figure 3-2 Front view without BusAdapter

Front view with BusAdapter

The figure on the left shows the CPU 1512SP-1 PN including a plugged BA 2xRJ45 BusAdapter. The BusAdapter is not included in scope of supply. The figure on the right shows a separate view of the BA 2xRJ45 BusAdapter.

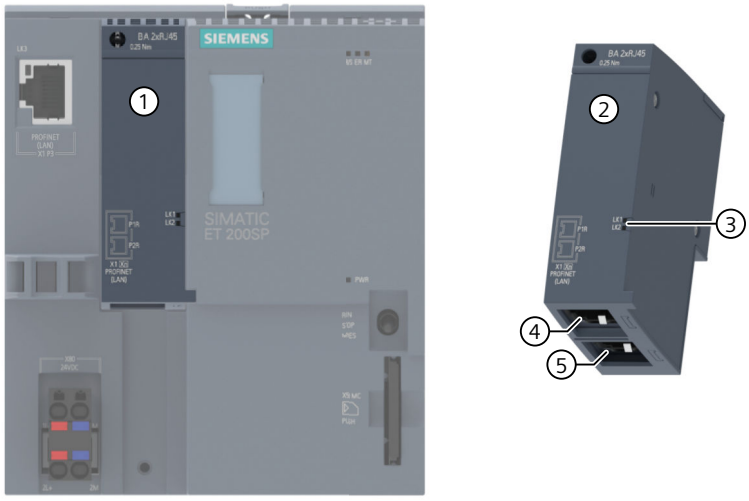

① BusAdapter BA 2xRJ45

② Separate view of the BusAdapter

③ LEDs for status displays of the PROFINET interface: LK1 and LK2 on BusAdapter

④ Port P1R of the PROFINET interface: RJ45 socket on BusAdapter BA 2×RJ45
R: Ring port for configuring a ring topology with media redundancy

⑤ Port P2R of the PROFINET interface: RJ45 socket on BusAdapter BA 2×RJ45
R: Ring port for configuring a ring topology with media redundancy

Figure 3-3 Front view of the CPU 1512SP-1 PN with BA 2xRJ45 BusAdapter

3.5 Mode switch

Use the mode switch to set the CPU operating mode.

The following table shows the position of the switch and the corresponding meaning.

Table 3-1 Mode switch settings

Position	Meaning	Explanation
RUN	RUN mode	The CPU can process the user program.
STOP	STOP mode	The user program is not being executed.
MRES	Memory reset	Position for CPU memory reset.

Wiring

4

This section provides information on the pin assignment of the individual interfaces and the block diagram of the CPU 1512SP-1 PN.

24 V DC supply voltage (X80)

The connector for the supply voltage is plugged in when the CPU ships from the factory.

The following table shows the signal names and the descriptions of the pin assignment of the 24 V DC supply voltage.

Table 4-1 Pin assignment 24 V DC supply voltage

View Connector	Signal name [1]		Description
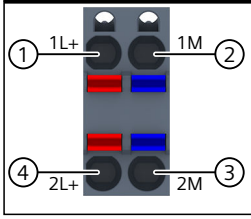	1	1L+	+ 24 V DC of the supply voltage
	2	1M	Ground of the supply voltage
	3	2M	Ground of the supply voltage for loop-through [2]
	4	2L+	+ 24 V DC of the supply voltage for loop-through [2]

[1] 1L+ and 2L+ as well as 1M and 2M are bridged internally

[2] Maximum 10 A permitted

PROFINET IO interface on the CPU (X1 P3)

The assignment corresponds to the Ethernet standard for an RJ45 connector.

- When autonegotiation is deactivated, the RJ45 socket is allocated as a switch (MDI-X).
- If autonegotiation is activated, then autocrossing is active and the RJ45 socket has either a device assignment (MDI) or switch assignment (MDI-X).

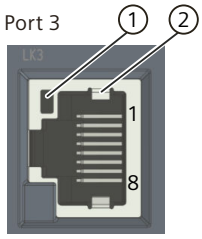

① LINK LED for port P3 (green LED on CPU)

② Shielding

BusAdapter

The following BusAdapters can be selected for use with the CPU 1512SP-1 PN :

- BusAdapter BA 2×RJ45
- BusAdapter BA SCRJ/RJ45
- BusAdapter BA LC/RJ45
- BusAdapter BA 2×FC
- BusAdapter BA 2xSCRJ
- BusAdapter BA SCRJ/FC
- BusAdapter BA 2xLC
- BusAdapter BA LC/FC
- BusAdapter BA 2xM12

For more information on the various BusAdapters, please refer to the SIMATIC ET 200SP BusAdapter (https://support.industry.siemens.com/cs/us/en/view/109751716) Equipment Manual.

Reference

You can find more information on the topics of "Connecting the CPU" and "Accessories/spare parts" in the ET 200SP distributed I/O system (https://support.automation.siemens.com/WW/view/en/58649293) System Manual.

Assignment of the MAC addresses

The MAC address is a globally unique device identifier that is assigned to each PROFINET device in the factory. Its 6 bytes are divided into 3 bytes for the manufacturer ID and 3 bytes for the device ID (serial number). The front of the CPU 1512SP-1 PN is lasered with the MAC address of the PROFINET interface.

The PROFINET interface X1 of the CPU 1512SP-1 PN has three ports. Port 3 is located on the CPU. Ports 1 and 2 are located on the optional BusAdapter. In addition to the PROFINET interface, each PROFINET port also has a separate MAC address. There is therefore a total of four MAC addresses for the CPU 1512SP-1 PN.

The MAC addresses of the PROFINET ports are needed for the LLDP protocol, for example for the neighborhood discovery function.

The table below shows how the MAC addresses are assigned.

Table 4-2 Assignment of the MAC addresses

	Assignment
MAC address 1	PROFINET interface X1 • Visible in STEP 7 for accessible devices • Lasered on the front of the CPU (start of the number range)
MAC address 2	Port X1 P1R (required for LLDP, for example)
MAC address 3	Port X1 P2R (required for LLDP, for example)
MAC address 4	Port X1 P3 (required for LLDP, for example)

Block diagram

The following figure shows the block diagram of the CPU 1512SP-1 PN.

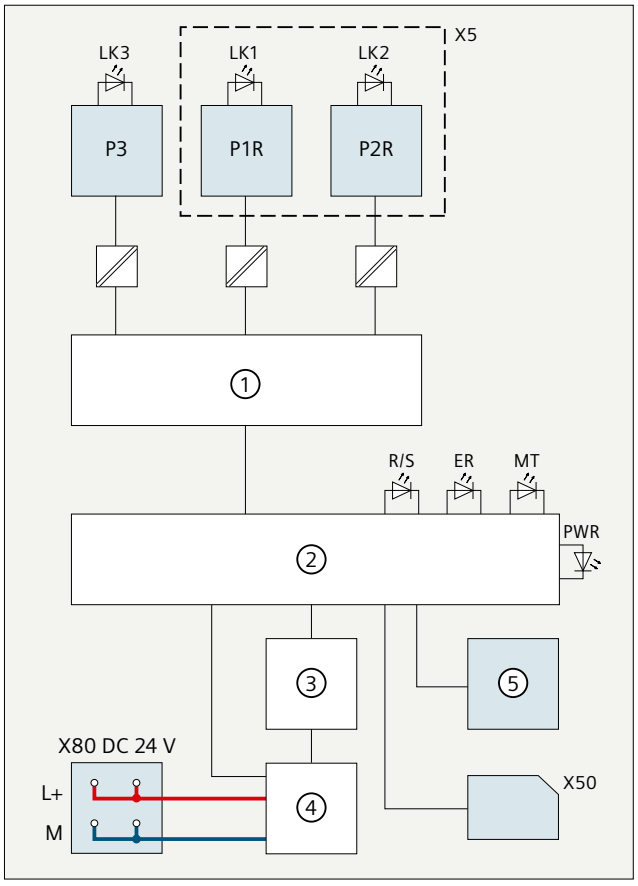

①	PROFINET switch	P1R	PROFINET interface X1 Port 1
②	Electronics	P2R	PROFINET interface X1 Port 2
③	Backplane bus interface	P3	PROFINET interface X1 Port 3
④	Internal supply voltage	L+	24 V DC supply voltage
⑤	RUN/STOP/MRES mode selector	M	Ground

X5	BusAdapter	LK1, 2, 3	LED Link TX/RX (green)
X50	SIMATIC Memory Card	R/S	RUN/STOP LED (green/yellow)
X80 24 V DC	Infeed of supply voltage	ER	ERROR LED (red)
		MT	MAINT LED (yellow)
		PWR	POWER LED (green)

Figure 4-1 Block diagram of the CPU 1512SP-1 PN

Interrupts, error messages, diagnostics and system alarms

5

The status and error displays of the CPU 1512SP-1 PN are described below.

You will find additional information on "Interrupts" in the STEP 7 online help.

You can find additional information on the topics of "Diagnostics" and "System alarms" in the Diagnostics (https://support.automation.siemens.com/WW/view/en/59192926) function manual.

5.1 Status and error display of the CPU

LED displays

The figure below shows the LED displays of the CPU 1512SP-1 PN and the BA 2xRJ45 BusAdapter.

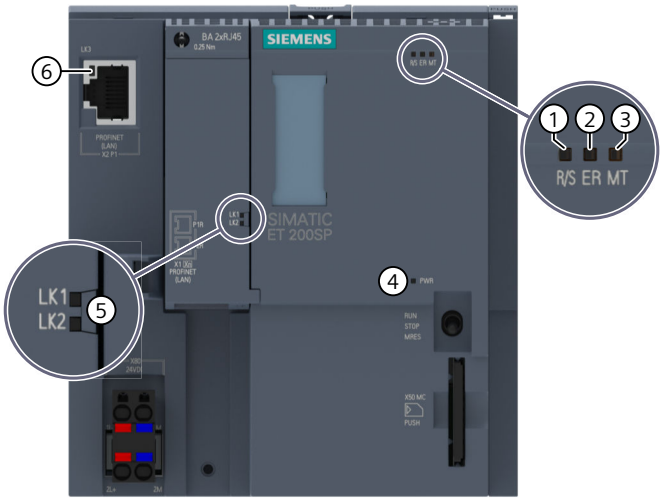

① RUN/STOP LED (green/yellow LED)

② ERROR LED (red LED)

③ MAINT LED (yellow LED)

④ POWER LED (green LED)

⑤ LINK RX/TX-LED for the ports X1 P1 and X1 P2 (green LEDs on the BusAdapter)

⑥ LINK RX/TX LED for port X1 P3 (green LED on the CPU)

Figure 5-1 LED displays on the CPU and BusAdapter

Meaning of the POWER, RUN/STOP, ERROR and MAINT LEDs

CPU 1512SP-1 PN features an LED for monitoring the supply voltage of the electronics (PWR) and three LEDs for displaying the current operating and diagnostics status. The following table shows the meaning of the various combinations of colors for the POWER, RUN/STOP, ERROR and MAINT LEDs.

Table 5-1 Meaning of the LEDs

POWER LED	RUN/STOP LED	ERROR LED	MAINT LED	Meaning
LED off	LED off	LED off	LED off	Missing or insufficient supply voltage on the CPU.
LED lit green	LED off	LED flashes red	LED off	An error has occurred.
LED lit green	LED lit green	LED off	LED off	CPU is in RUN mode.
LED lit green	LED lit green	LED off	LED lit yellow	Maintenance demanded for the plant. You need to check/replace the affected hardware within a short period of time.
				Active Force job.
				OPC UA server of the CPU expects initial trust lists and CRLs via GDS Push function.
LED lit green	LED lit green	LED flashes red	LED off	A diagnostics event is pending. The CPU is in RUN mode.
LED lit green	LED lit yellow	LED flashes red	LED off	A diagnostics event is pending. The CPU is in STOP mode.
LED lit green	LED lit yellow	LED off	LED flashes yellow	Firmware update using SIMATIC Memory Card successfully completed.
LED lit green	LED lit yellow	LED off	LED off	CPU is in STOP mode.
				CPU runs a program with active breakpoints. The program is at a breakpoint.
LED lit green	LED lit yellow	LED flashes red	LED flashes yellow	The program on the SIMATIC Memory Card is causing an error.
				Firmware update using SIMATIC Memory Card failed.
				The CPU has detected an error state. Additional information is available via the CPU diagnostic buffer.
LED lit green	LED flashes yellow	LED off	LED off	CPU is performing internal activities during STOP, e.g. startup after STOP.
				Download of the user program from the SIMATIC Memory Card
				CPU carries out a program with active breakpoint. The program is presently moving from one breakpoint to another.
				Firmware update is being performed.
LED lit green	LED flashes yellow/green	LED off	LED off	Startup (transition from STOP → RUN)

POWER LED	RUN/STOP LED	ERROR LED	MAINT LED	Meaning
LED lit green	LED flashes yellow/green	LED flashes red	LED flashes yellow	Startup (CPU booting)
				LED testing during startup.
				Flash LEDs

Meaning of the LINK LED

Each port has a LINK LED (LK1, LK2, LK3). The table below shows the various "LED scenarios" of ports for the CPU 1512SP-1 PN.

Table 5-2 Meaning of the LEDs

LINK LED	Meaning
LED off	There is no Ethernet connection between the PROFINET interface of the PROFINET device and the communication partner. No data is currently being sent/received via the PROFINET interface. There is no LINK connection.
LED flashes green	The CPU is performing an "LED flash test".
LED lit green	There is an Ethernet connection between the PROFINET interface of your PROFINET device and a communication partner.

NOTE

"LED" instruction

You can read the status (e.g. "On" or "Off") of LEDs of a CPU or a module using the "LED" instruction. Note, however, that it is not possible to read the LED status of the LINK RX/TX LEDs on all S7-1500 CPUs.

You can find additional information on the "LED" instruction in the STEP 7 online help.

Technical specifications

6

The following table shows the technical specifications as of 11/2024. You can find a data sheet with the latest technical specifications on the Internet (https://support.industry.siemens.com/cs/ww/en/pv/6ES7512-1DM03-0AB0/td?dl=en).

Article number	6ES7512-1DM03-0AB0
General information	
Product type designation	CPU 1512SP-1 PN
HW functional status	FS03
Firmware version	V4.0
• FW update possible	Yes
Product function	
• I&M data	Yes; I&M0 to I&M3
• Module swapping during operation (hot swapping)	Yes; Multi-hot swapping
• Isochronous mode	Yes; only with PROFINET; with minimum OB 6x cycle of 500 µs
• SysLog	Yes
Engineering with	
• STEP 7 TIA Portal configurable/integrated from version	V20 (FW V4.0) / V18 (FW V3.0) or higher; configurable with older TIA Portal versions as 6ES7 512-1DK01-0AB0
Configuration control	
via dataset	Yes
Control elements	
Mode selector switch	1
Supply voltage	
Rated value (DC)	24 V
permissible range, lower limit (DC)	19.2 V
permissible range, upper limit (DC)	28.8 V
Reverse polarity protection	Yes
Mains buffering	
• Mains/voltage failure stored energy time	10 ms
Input current	
Current consumption (rated value)	0.48 A
Current consumption, max.	0.7 A
Inrush current, max.	1.34 A; Rated value
I^2t	0.3 $A^2 \cdot s$
Power	
Infeed power to the backplane bus	8.05 W

Article number	6ES7512-1DM03-0AB0
Power loss	
Power loss, typ.	3.5 W
Memory	
Number of slots for SIMATIC memory card	1
SIMATIC memory card required	Yes
Work memory	
• integrated (for program)	400 kbyte
• integrated (for data)	2 Mbyte
Load memory	
• Plug-in (SIMATIC Memory Card), max.	32 Gbyte
Backup	
• maintenance-free	Yes
CPU processing times	
for bit operations, typ.	6 ns
for word operations, typ.	7 ns
for fixed point arithmetic, typ.	9 ns
for floating point arithmetic, typ.	37 ns
CPU-blocks	
Number of elements (total)	4 000; Blocks (OB, FB, FC, DB) and UDTs
DB	
• Number range	1 ... 60 999; subdivided into: number range that can be used by the user: 1 ... 59 999, and number range of DBs created via SFC 86: 60 000 ... 60 999
• Size, max.	1 Mbyte; For DBs with absolute addressing, the max. size is 64 KB
FB	
• Number range	0 ... 65 535
• Size, max.	400 kbyte
FC	
• Number range	0 ... 65 535
• Size, max.	400 kbyte

Article number	6ES7512-1DM03-0AB0
OB	
• Size, max.	400 kbyte
• Number of free cycle OBs	100
• Number of time alarm OBs	20
• Number of delay alarm OBs	20
• Number of cyclic interrupt OBs	20; With minimum OB 3x cycle of 250 µs
• Number of process alarm OBs	50
• Number of DPV1 alarm OBs	3
• Number of isochronous mode OBs	1
• Number of technology synchronous alarm OBs	2
• Number of startup OBs	100
• Number of asynchronous error OBs	4
• Number of synchronous error OBs	2
• Number of diagnostic alarm OBs	1
Nesting depth	
• per priority class	24
Counters, timers and their retentivity	
S7 counter	
• Number	2 048
Retentivity	
– adjustable	Yes
IEC counter	
• Number	Any (only limited by the main memory)
Retentivity	
– adjustable	Yes
S7 times	
• Number	2 048
Retentivity	
– adjustable	Yes
IEC timer	
• Number	Any (only limited by the main memory)
Retentivity	
– adjustable	Yes
Data areas and their retentivity	
Retentive data area (incl. timers, counters, flags), max.	256 kbyte; in total; available retentive memory for bit memories, timers, counters, DBs, and technology data (axes): 216 KB

Article number	6ES7512-1DM03-0AB0
Flag	
• Size, max.	16 kbyte
• Number of clock memories	8; 8 clock memory bit, grouped into one clock memory byte
Data blocks	
• Retentivity adjustable	Yes
• Retentivity preset	No
Local data	
• per priority class, max.	64 kbyte; max. 16 KB per block
Address area	
Number of IO modules	2 048; max. number of modules / submodules
I/O address area	
• Inputs	32 kbyte; All inputs are in the process image
• Outputs	32 kbyte; All outputs are in the process image
per integrated IO subsystem	
– Inputs (volume)	8 kbyte
– Outputs (volume)	8 kbyte
per CM/CP	
– Inputs (volume)	8 kbyte
– Outputs (volume)	8 kbyte
Subprocess images	
• Number of subprocess images, max.	32
Address space per module	
• Address space per module, max.	288 byte; For input and output data respectively
Address space per station	
• Address space per station, max.	2 560 byte; for central inputs and outputs; depending on configuration; 2 048 bytes for ET 200SP modules + 512 bytes for ET 200AL modules
Hardware configuration	
Number of distributed IO systems	32; A distributed I/O system is characterized not only by the integration of distributed I/O via PROFINET or PROFIBUS communication modules, but also by the connection of I/O via AS-i master modules or links (e.g. IE/PB-Link)
Number of DP masters	
• Via CM	1
Number of IO Controllers	
• integrated	1
• Via CM	0

Article number	6ES7512-1DM03-0AB0
Rack	
• Modules per rack, max.	82; CPU + 64 modules + server module (mounting width max. 1 m) + 16 ET 200AL modules
• Quantity of operable ET 200SP modules, max.	64
• Quantity of operable ET 200AL modules, max.	16
• Number of lines, max.	1
PtP CM	
• Number of PtP CMs	the number of connectable PtP CMs is only limited by the number of available slots
Time of day	
Clock	
• Type	Hardware clock
• Backup time	6 wk; At 40 °C ambient temperature, typically
• Deviation per day, max.	10 s; Typ.: 2 s
Operating hours counter	
• Number	16
Clock synchronization	
• supported	Yes
• to DP, master	Yes; Via CM DP module
• on DP, device	Yes; Via CM DP module
• in AS, master	Yes
• in AS, device	Yes
• on Ethernet via NTP	Yes
Interfaces	
Number of PROFINET interfaces	1
Number of PROFIBUS interfaces	1; Via CM DP module
Optical interface	No
1. Interface	
Interface types	
• RJ 45 (Ethernet)	Yes; X1 P3; opt. X1 P1 and X1 P2 via BusAdapter BA 2x RJ45
• Number of ports	3; 1. integr. + 2. via BusAdapter
• integrated switch	Yes
• BusAdapter (PROFINET)	Yes; compatible BusAdapters: BA 2x RJ45, BA 2x M12, BA 2x FC, BA 2x LC, BA LC/RJ45, BA LC/FC, BA 2x SCRJ, BA SCRJ/RJ45, BA SCRJ/FC

Article number	6ES7512-1DM03-0AB0
Protocols	
• IP protocol	Yes; IPv4
• PROFINET IO Controller	Yes
• PROFINET IO Device	Yes
• SIMATIC communication	Yes
• Open IE communication	Yes; Optionally also encrypted
• Web server	Yes
• Media redundancy	Yes
PROFINET IO Controller	
Services	
– Isochronous mode	Yes
– Direct data exchange	Yes; Requirement: IRT and isochronous mode (MRPD optional)
– IRT	Yes
– PROFIenergy	Yes; per user program
– Prioritized startup	Yes; Max. 32 PROFINET devices
– Number of connectable IO Devices, max.	128; In total, up to 512 distributed I/O devices can be connected via AS-i, PROFIBUS or PROFINET
– Of which IO devices with IRT, max.	64
– Number of connectable IO Devices for RT, max.	128
– of which in line, max.	128
– Number of IO Devices that can be simultaneously activated/deactivated, max.	8; in total across all interfaces
– Number of IO Devices per tool, max.	8
– Updating times	The minimum value of the update time also depends on communication share set for PROFINET IO, on the number of IO devices, and on the quantity of configured user data
– PROFINET Security Class	1
Update time for IRT	
– for send cycle of 250 µs	250 µs to 4 ms; Note: In the case of IRT with isochronous mode, the minimum update time of 500 µs of the isochronous OB is decisive
– for send cycle of 500 µs	500 µs to 8 ms
– for send cycle of 1 ms	1 ms to 16 ms
– for send cycle of 2 ms	2 ms to 32 ms
– for send cycle of 4 ms	4 ms to 64 ms
– With IRT and parameterization of "odd" send cycles	Update time = set "odd" send clock (any multiple of 125 µs: 375 µs, 625 µs ... 3 875 µs)

Article number	6ES7512-1DM03-0AB0
Update time for RT	
– for send cycle of 250 µs	250 µs to 128 ms
– for send cycle of 500 µs	500 µs to 256 ms
– for send cycle of 1 ms	1 ms to 512 ms
– for send cycle of 2 ms	2 ms to 512 ms
– for send cycle of 4 ms	4 ms to 512 ms
PROFINET IO Device	
Services	
– Isochronous mode	No
– IRT	Yes
– PROFIenergy	Yes; per user program
– Shared device	Yes
– Number of IO Controllers with shared device, max.	4
– activation/deactivation of I-devices	Yes; per user program
– Asset management record	Yes; per user program
– PROFINET Security Class	SNMP Configuration and DCP Read Only
2. Interface	
Interface types	
• RS 485	Yes; Via CM DP module
• Number of ports	1
Protocols	
• PROFIBUS DP master	Yes
• PROFIBUS DP device	Yes
• SIMATIC communication	Yes
PROFIBUS DP master	
• Number of connections, max.	48; Of which 4 each reserved for ES and HMI
• max. number of DP devices	125; In total, up to 512 distributed I/O devices can be connected via AS-i, PROFIBUS or PROFINET
Services	
– Equidistance	No
– Isochronous mode	No
– activation/deactivation of DP devices	Yes
Interface types	
RJ 45 (Ethernet)	
• 100 Mbps	Yes
• Autonegotiation	Yes
• Autocrossing	Yes
• Industrial Ethernet status LED	Yes

Article number	6ES7512-1DM03-0AB0
RS 485	
• Transmission rate, max.	12 Mbit/s
Protocols	
PROFIsafe	No
Number of connections	
• Number of connections, max.	128; via integrated interfaces of the CPU and connected CPs / CMs
• Number of connections reserved for ES/HMI/web	10
• Number of connections via integrated interfaces	88
• Number of connections per CP/CM	32
• Number of S7 routing paths	16
Redundancy mode	
• H-Sync forwarding	Yes
Media redundancy	
– Media redundancy	Yes; only via BusAdapter
– MRP	Yes; MRP Automanager according to IEC 62439-2 Edition 2.0, MRP Manager; MRP Client
– MRP interconnection, supported	Yes; as MRP ring node according to IEC 62439-2 Edition 3.0
– MRPD	Yes; Requirement: IRT
– Switchover time on line break, typ.	200 ms; For MRP, bumpless for MRPD
– Number of stations in the ring, max.	50
SIMATIC communication	
• PG/OP communication	Yes; encryption with TLS V1.3 pre-selected
• S7 routing	Yes
• Data record routing	Yes
• S7 communication, as server	Yes
• S7 communication, as client	Yes
• User data per job, max.	See online help (S7 communication, user data size)
Open IE communication	
• TCP/IP	Yes
– Data length, max.	64 kbyte
– several passive connections per port, supported	Yes
• ISO-on-TCP (RFC1006)	Yes
– Data length, max.	64 kbyte

Article number	6ES7512-1DM03-0AB0
• UDP	Yes
– Data length, max.	2 kbyte; 1 472 bytes for UDP broadcast
– UDP multicast	Yes; max. 78 multicast circuits
• DHCP	Yes
• DNS	Yes
• SNMP	Yes
• DCP	Yes
• LLDP	Yes
• Encryption	Yes; Optional
Web server	
• HTTP	Yes; Standard and user pages
• HTTPS	Yes; Standard and user pages
OPC UA	
• Runtime license required	Yes; "Small" license required
• OPC UA Client	Yes; Data Access (registered Read/Write), Method Call
– Application authentication	Yes
– Security policies	Available security policies: None, Basic128Rsa15, Basic256Rsa15, Basic256Sha256
– User authentication	"anonymous" or by user name & password
– Number of connections, max.	4
– Number of nodes of the client interfaces, recommended max.	1 000
– Number of elements for one call of OPC_UA_NodeGetHandleList/OPC_UA_ReadList/OPC_UA_WriteList, max.	300
– Number of elements for one call of OPC_UA_NameSpaceGetIndexList, max.	20
– Number of elements for one call of OPC_UA_MethodGetHandleList, max.	100
– Number of simultaneous calls of the client instructions for session management, per connection, max.	1
– Number of simultaneous calls of the client instructions for data access, per connection, max.	5
– Number of registerable nodes, max.	5 000
– Number of registerable method calls of OPC_UA_MethodCall, max.	100
– Number of inputs/outputs when calling OPC_UA_MethodCall, max.	20

Article number	6ES7512-1DM03-0AB0
• OPC UA Server	Yes
– Application authentication	Yes
– Security policies	available security policies: None, Basic128Rsa15, Basic256Rsa15, Basic256Sha256, Aes128Sha256RsaOaep, Aes256Sha256RsaPss
– User authentication	"anonymous" or by user name & password
– GDS support (certificate management)	Yes
– Number of sessions, max.	32
– Number of accessible variables, max.	50 000
– Number of registerable nodes, max.	10 000
– Number of subscriptions per session, max.	50
– Sampling interval, min.	100 ms
– Publishing interval, min.	200 ms
– Number of server methods, max.	20
– Number of inputs/outputs per server method, max.	20
– Number of monitored items, recommended max.	4 000; for 1 s sampling interval and 1 s send interval
– Number of server interfaces, max.	10 of each "Server interfaces" / "Companion specification" type and 20 of the type "Reference namespace"
– Number of nodes for user-defined server interfaces, max.	15 000
• Alarms and Conditions	Yes
– Number of program alarms	100
– Number of alarms for system diagnostics	50
Further protocols	
• MODBUS	Yes; MODBUS TCP
S7 message functions	
Number of login stations for message functions, max.	32
number of subscriptions, max.	250
number of tags/attributes for subscriptions, max.	2 000
Program alarms	Yes
Number of configurable program messages, max.	5 000; Program messages are generated by the "Program_Alarm" block, ProDiag or GRAPH
Number of loadable program messages in RUN, max.	5 000

Article number	6ES7512-1DM03-0AB0
Test commissioning functions	
Joint commission (Team Engineering)	Yes; Parallel online access possible for up to 5 engineering systems
Status block	Yes; Up to 8 simultaneously (in total across all ES clients)
Single step	Yes
Number of breakpoints	8
Profiling	Yes
Status/control	
• Status/control variable	Yes
• Variables	Inputs/outputs, memory bits, DBs, distributed I/Os, timers, counters
• Number of variables, max.	
– of which status variables, max.	200; per job
– of which control variables, max.	200; per job
Forcing	
• Forcing	Yes
• Forcing, variables	Peripheral inputs/outputs
• Number of variables, max.	200
Diagnostic buffer	
• present	Yes
• Number of entries, max.	1 000
– of which powerfail-proof	500
Traces	
• Number of configurable Traces	4
• Memory size per trace, max.	512 kbyte
Interrupts/diagnostics/status information	
Diagnostics indication LED	
• RUN/STOP LED	Yes
• ERROR LED	Yes
• MAINT LED	Yes
• Monitoring of the supply voltage (PWR-LED)	Yes
• Connection display LINK TX/RX	Yes

Article number	6ES7512-1DM03-0AB0
Supported technology objects	
Motion Control	Yes; Note: The number of technology objects affects the cycle time of the PLC program; selection guide via the TIA Selection Tool
• Number of available Motion Control resources for technology objects	1 120
• Required Motion Control resources	
– per speed-controlled axis	40
– per positioning axis	80
– per synchronous axis	160
– per external encoder	80
– per output cam	20
– per cam track	160
– per probe	40
• Positioning axis	
– Number of positioning axes at motion control cycle of 4 ms (typical value)	11
– Number of positioning axes at motion control cycle of 8 ms (typical value)	14
Controller	
• PID_Compact	Yes; Universal PID controller with integrated optimization
• PID_3Step	Yes; PID controller with integrated optimization for valves
• PID-Temp	Yes; PID controller with integrated optimization for temperature
Counting and measuring	
• High-speed counter	Yes
Ambient conditions	
Ambient temperature during operation	
• horizontal installation, min.	-30 °C; No condensation
• horizontal installation, max.	60 °C
• vertical installation, min.	-30 °C; No condensation
• vertical installation, max.	50 °C
Altitude during operation relating to sea level	
• Installation altitude above sea level, max.	5 000 m; Restrictions for installation altitudes > 2 000 m, see manual
configuration / header	
configuration / programming / header	

Article number	6ES7512-1DM03-0AB0
Programming language	
– LAD	Yes
– FBD	Yes
– STL	Yes
– SCL	Yes
– CFC	Yes
– GRAPH	Yes
Know-how protection	
• User program protection/password protection	Yes
• Copy protection	Yes
• Block protection	Yes
Access protection	
• protection of confidential configuration data	Yes
• Protection level: Write protection	Yes
• Protection level: Read/write protection	Yes
• Protection level: Write protection for Failsafe	No
• Protection level: Complete protection	Yes
• User administration	Yes; device-wide and centralized
• Number of users	100
programming / cycle time monitoring / header	
• lower limit	adjustable minimum cycle time
• upper limit	adjustable maximum cycle time
Dimensions	
Width	100 mm
Height	117 mm
Depth	75 mm
Weights	
Weight, approx.	265 g

General technical specifications

You can find information on the general technical specifications, such as standards and approvals, electromagnetic compatibility, protection class, etc. in the ET 200SP distributed I/O system (https://support.automation.siemens.com/WW/view/en/58649293) System Manual.

Dimension drawing

A

This section contains a dimension drawing of the module mounted on a mounting rail. Always observe the specified dimensions for installation in cabinets, control rooms, etc.

Dimension drawing of the CPU 1512SP-1 PN

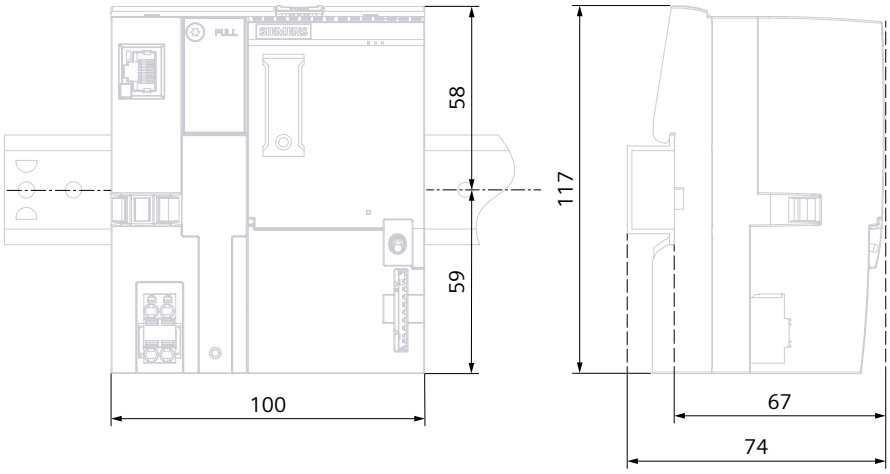

Figure A-1 Dimension drawing CPU 1512SP-1 PN